# 436ball FBGA Specification

## 12GB LPDDR5

This document is a general product description and is subject to change without notice. SK hynix does not assume any responsibility for use of circuits described. No patent licenses are implied.

## Revision History

| Rev. | History | Date | Remark |
|---|---|---|---|
| 1.0 | Fianl Version | May 2020 | |
| 1.01 | - Corrected IDD Data | Jun 2020 | |
| 1.1 | - Updated IDD Measurement (1ch based) | Sep 2020 | |

## Ordering Information

| Part Number | Mode | Operation Voltage | Density | Speed | Package | Operating Temperature |
|---|---|---|---|---|---|---|
| H9JKNNHAB3MVJR-N6H | LPDDR5 | 1.05V/0.5V | 12GB (x16, 4CH) | LPDDR5 6400 | 436 Ball FBGA (Lead & Halogen Free) | -25°C ~ 105°C |

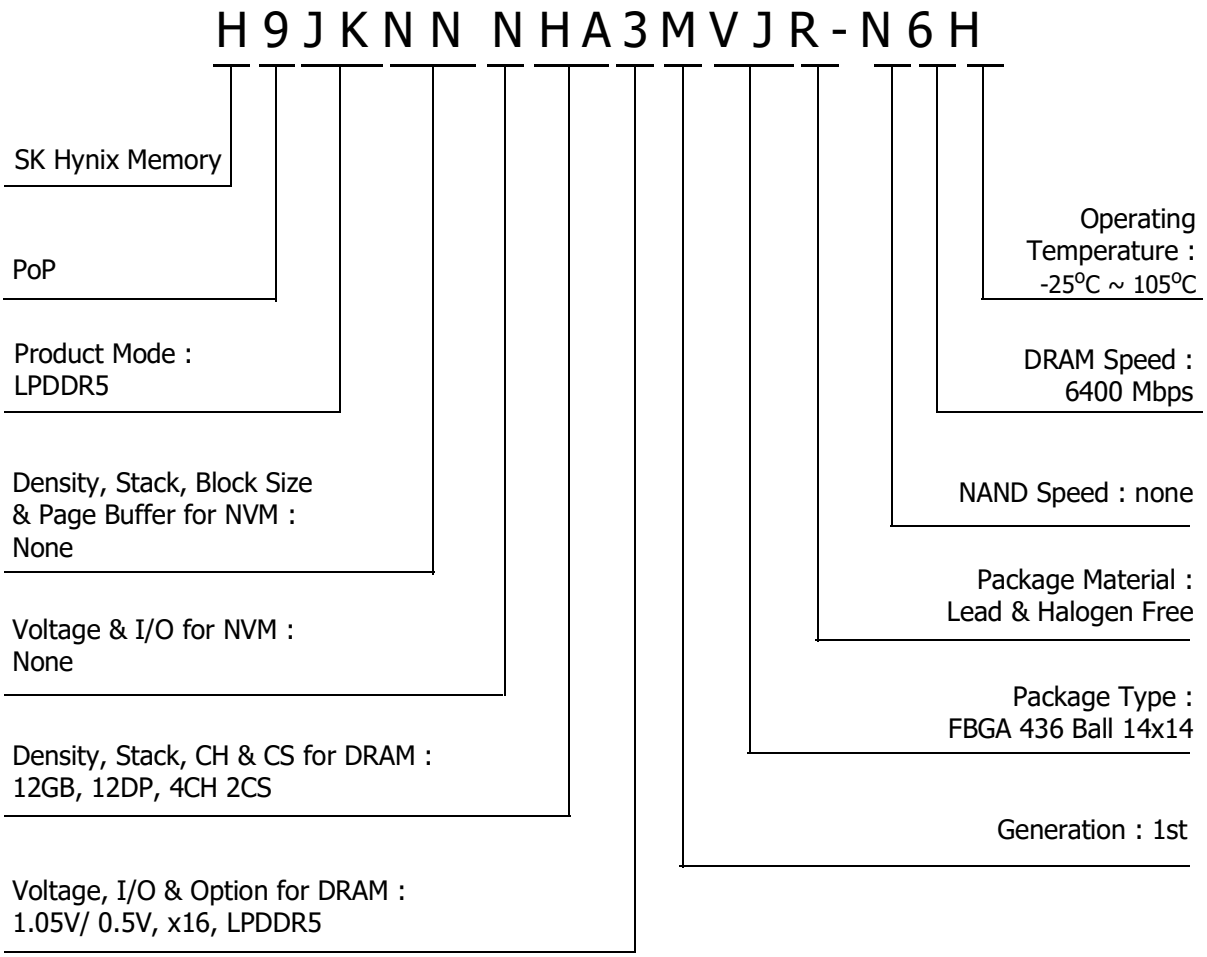

## Functional Block Diagram

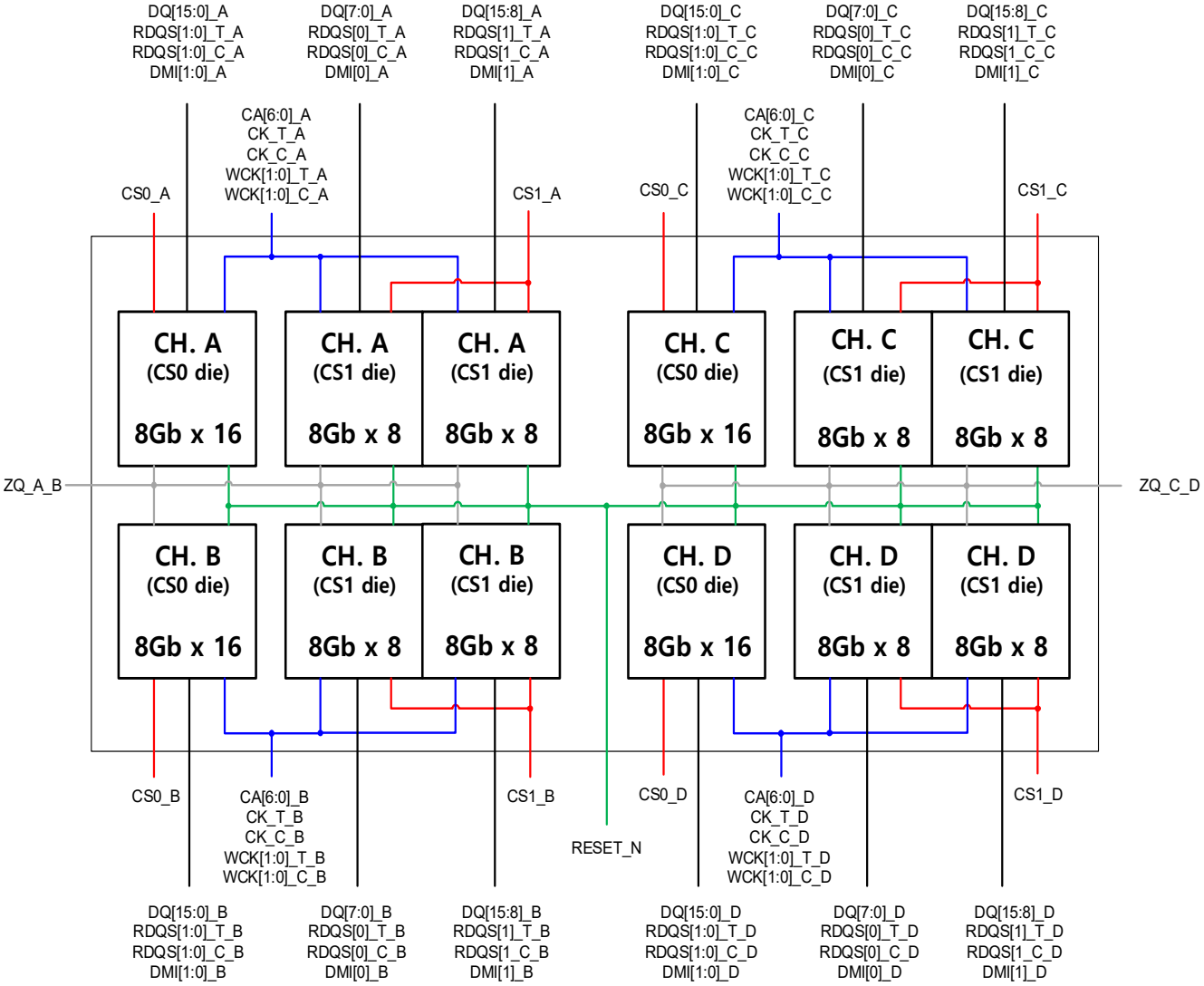


NOTE 1 In Mixed packages, which are configured with both Standard dies (x 16) and Byte-Mode dies (x 8), only byte-mode latency parameters are supported.

# Package Information

## POP ballout - 436 balls, 14.00x14.00mm$^2$, 0.40mm pitch

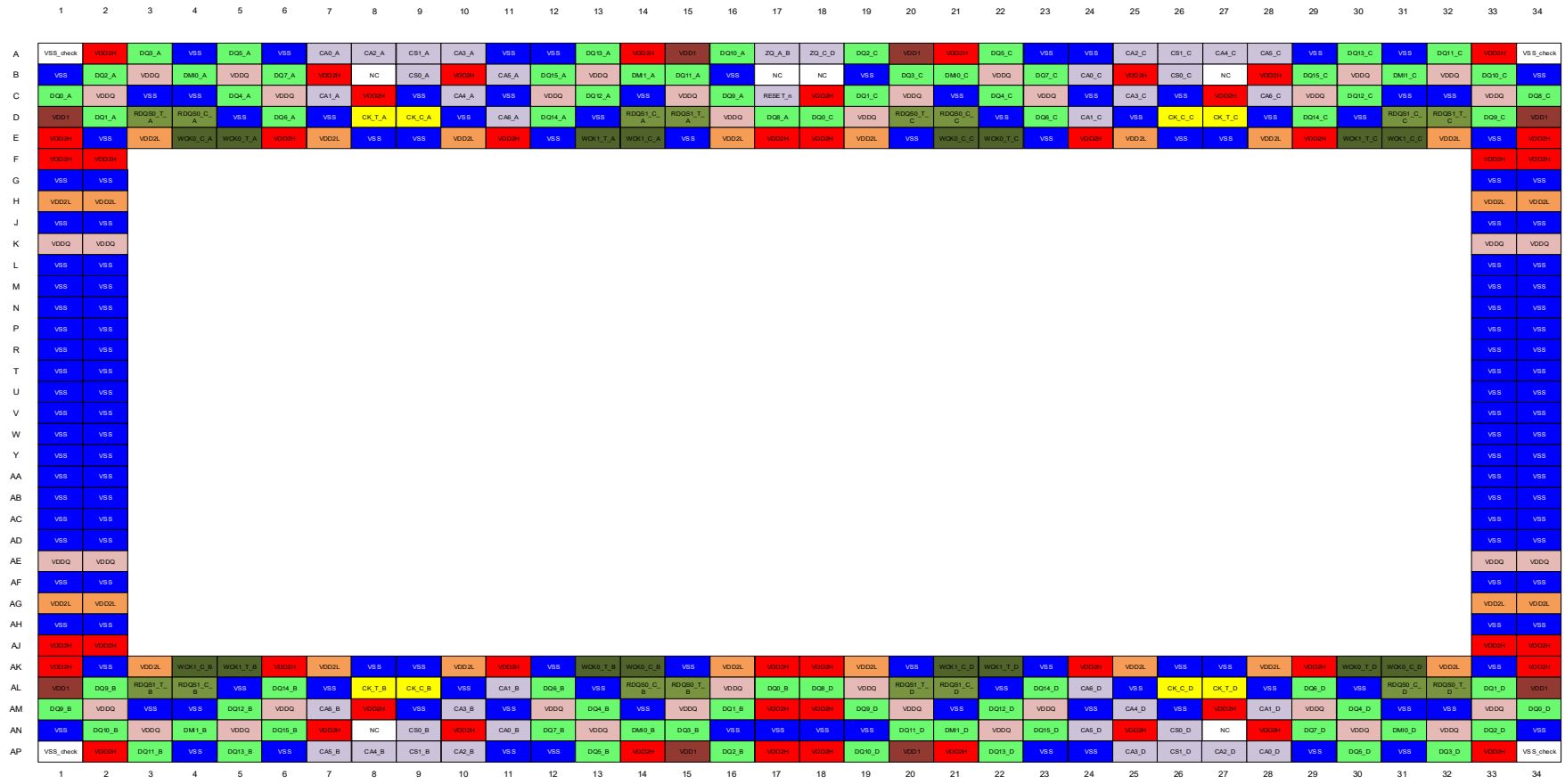

| | 1 | 2 | 3 | 4 | 5 | 6 | 7 | 8 | 9 | 10 | 11 | 12 | 13 | 14 | 15 | 16 | 17 | 18 | 19 | 20 | 21 | 22 | 23 | 24 | 25 | 26 | 27 | 28 | 29 | 30 | 31 | 32 | 33 | 34 |
|---|---|---|---|---|---|---|---|---|---|---|---|---|---|---|---|---|---|---|---|---|---|---|---|---|---|---|---|---|---|---|---|---|---|---|
| A | VSS_check | VDD2H | DQ3_A | VSS | DQ5_A | VSS | CA0_A | CA2_A | CS1_A | CA3_A | VSS | VSS | DQ13_A | VDD2H | VDD1 | DQ10_A | ZQ_A_B | ZQ_C_D | DQ2_C | VDD1 | VDD2H | DQ5_C | VSS | VSS | CA2_C | CS1_C | CA4_C | CA5_C | VSS | DQ13_C | VSS | DQ11_C | VDD2H | VSS_check |
| B | VSS | DQ2_A | VDDQ | DMI0_A | VDDQ | DQ7_A | VDD2H | NC | CS0_A | VDD2H | CA5_A | DQ15_A | VDDQ | DMI1_A | DQ11_A | VSS | NC | NC | VSS | DQ3_C | DMI0_C | VDDQ | DQ7_C | CA0_C | VDD2H | CS0_C | NC | VDD2H | DQ15_C | VDDQ | DMI1_C | VDDQ | DQ10_C | VSS |
| C | DQ0_A | VDDQ | VSS | VSS | DQ4_A | VDDQ | CA1_A | VDD2H | VSS | CA4_A | VSS | VDDQ | DQ12_A | VSS | VDDQ | DQ9_A | RESET_n | VDD2H | DQ1_C | VDDQ | VSS | DQ4_C | VDDQ | VSS | CA3_C | VSS | VDD2H | CA6_C | VDDQ | DQ12_C | VSS | VSS | VDDQ | DQ8_C |
| D | VDD1 | DQ1_A | RDQS0_T_A | RDQS0_C_A | VSS | DQ6_A | VSS | CK_T_A | CK_C_A | VSS | CA6_A | DQ14_A | VSS | RDQS1_C_A | RDQS1_T_A | VDDQ | DQ8_A | DQ0_C | VDDQ | RDQS0_T_C | RDQS0_C_C | VSS | DQ6_C | CA1_C | VSS | CK_C_C | CK_T_C | VSS | DQ14_C | VSS | RDQS1_C_C | RDQS1_T_C | DQ9_C | VDD1 |
| E | VDD2H | VSS | VDD2L | WCK0_C_A | WCK0_T_A | VDD2H | VDD2L | VSS | VSS | VDD2L | VDD2H | VSS | WCK1_T_A | WCK1_C_A | VSS | VDD2L | VDD2H | VDD2H | VDD2L | VSS | WCK0_C_C | WCK0_T_C | VSS | VDD2H | VDD2L | VSS | VSS | VDD2L | VDD2H | WCK1_T_C | WCK1_C_C | VDD2L | VSS | VDD2H |
| F | VDD2H | VDD2H | | | | | | | | | | | | | | | | | | | | | | | | | | | | | | | VDD2H | VDD2H |
| G | VSS | VSS | | | | | | | | | | | | | | | | | | | | | | | | | | | | | | | VSS | VSS |
| H | VDD2L | VDD2L | | | | | | | | | | | | | | | | | | | | | | | | | | | | | | | VDD2L | VDD2L |
| J | VSS | VSS | | | | | | | | | | | | | | | | | | | | | | | | | | | | | | | VSS | VSS |
| K | VDDQ | VDDQ | | | | | | | | | | | | | | | | | | | | | | | | | | | | | | | VDDQ | VDDQ |
| L | VSS | VSS | | | | | | | | | | | | | | | | | | | | | | | | | | | | | | | VSS | VSS |
| M | VSS | VSS | | | | | | | | | | | | | | | | | | | | | | | | | | | | | | | VSS | VSS |
| N | VSS | VSS | | | | | | | | | | | | | | | | | | | | | | | | | | | | | | | VSS | VSS |
| P | VSS | VSS | | | | | | | | | | | | | | | | | | | | | | | | | | | | | | | VSS | VSS |
| R | VSS | VSS | | | | | | | | | | | | | | | | | | | | | | | | | | | | | | | VSS | VSS |
| T | VSS | VSS | | | | | | | | | | | | | | | | | | | | | | | | | | | | | | | VSS | VSS |
| U | VSS | VSS | | | | | | | | | | | | | | | | | | | | | | | | | | | | | | | VSS | VSS |
| V | VSS | VSS | | | | | | | | | | | | | | | | | | | | | | | | | | | | | | | VSS | VSS |
| W | VSS | VSS | | | | | | | | | | | | | | | | | | | | | | | | | | | | | | | VSS | VSS |
| Y | VSS | VSS | | | | | | | | | | | | | | | | | | | | | | | | | | | | | | | VSS | VSS |
| AA | VSS | VSS | | | | | | | | | | | | | | | | | | | | | | | | | | | | | | | VSS | VSS |
| AB | VSS | VSS | | | | | | | | | | | | | | | | | | | | | | | | | | | | | | | VSS | VSS |
| AC | VSS | VSS | | | | | | | | | | | | | | | | | | | | | | | | | | | | | | | VSS | VSS |
| AD | VSS | VSS | | | | | | | | | | | | | | | | | | | | | | | | | | | | | | | VSS | VSS |
| AE | VDDQ | VDDQ | | | | | | | | | | | | | | | | | | | | | | | | | | | | | | | VDDQ | VDDQ |
| AF | VSS | VSS | | | | | | | | | | | | | | | | | | | | | | | | | | | | | | | VSS | VSS |
| AG | VDD2L | VDD2L | | | | | | | | | | | | | | | | | | | | | | | | | | | | | | | VDD2L | VDD2L |
| AH | VSS | VSS | | | | | | | | | | | | | | | | | | | | | | | | | | | | | | | VSS | VSS |
| AJ | VDD2H | VDD2H | | | | | | | | | | | | | | | | | | | | | | | | | | | | | | | VDD2H | VDD2H |
| AK | VDD2H | VSS | VDD2L | WCK1_C_B | WCK1_T_B | VDD2H | VDD2L | VSS | VSS | VDD2L | VDD2H | VSS | WCK0_T_B | WCK0_C_B | VSS | VDD2L | VDD2H | VDD2H | VDD2L | VSS | WCK1_C_D | WCK1_T_D | VSS | VDD2H | VDD2L | VSS | VSS | VDD2L | VDD2H | WCK0_T_D | WCK0_C_D | VDD2L | VSS | VDD2H |
| AL | VDD1 | DQ9_B | RDQS1_T_B | RDQS1_C_B | VSS | DQ14_B | VSS | CK_T_B | CK_C_B | VSS | CA1_B | DQ6_B | VSS | RDQS0_C_B | RDQS0_T_B | VDDQ | DQ0_B | DQ8_D | VDDQ | RDQS1_T_D | RDQS1_C_D | VSS | DQ14_D | CA6_D | VSS | CK_C_D | CK_T_D | VSS | DQ6_D | VSS | RDQS0_C_D | RDQS0_T_D | DQ1_D | VDD1 |
| AM | DQ9_B | VDDQ | VSS | VSS | DQ12_B | VDDQ | CA6_B | VDD2H | VSS | CA3_B | VSS | VDDQ | DQ4_B | VSS | VDDQ | DQ1_B | VDD2H | VDD2H | DQ9_D | VDDQ | VSS | DQ12_D | VDDQ | VSS | CA4_D | VSS | VDD2H | CA1_D | VDDQ | DQ4_D | VSS | VSS | VDDQ | DQ0_D |
| AN | VSS | DQ10_B | VDDQ | DMI1_B | VDDQ | DQ15_B | VDD2H | NC | CS0_B | VDD2H | CA0_B | DQ7_B | VDDQ | DMI0_B | DQ3_B | VSS | VSS | VSS | VSS | DQ11_D | DMI1_D | VDDQ | DQ15_D | CA5_D | VDD2H | CS0_D | NC | VDD2H | DQ7_D | VDDQ | DMI0_D | VDDQ | DQ2_D | VSS |
| AP | VSS_check | VDD2H | DQ11_B | VSS | DQ13_B | VSS | CA5_B | CA4_B | CS1_B | CA2_B | VSS | VSS | DQ5_B | VDD2H | VDD1 | DQ2_B | VDD2H | VDD2H | DQ10_D | VDD1 | VDD2H | DQ13_D | VSS | VSS | CA3_D | CS1_D | CA2_D | CA0_D | VSS | DQ5_D | VSS | DQ3_D | VDD2H | VSS_check |

**TOP VIEW**

## Package Information

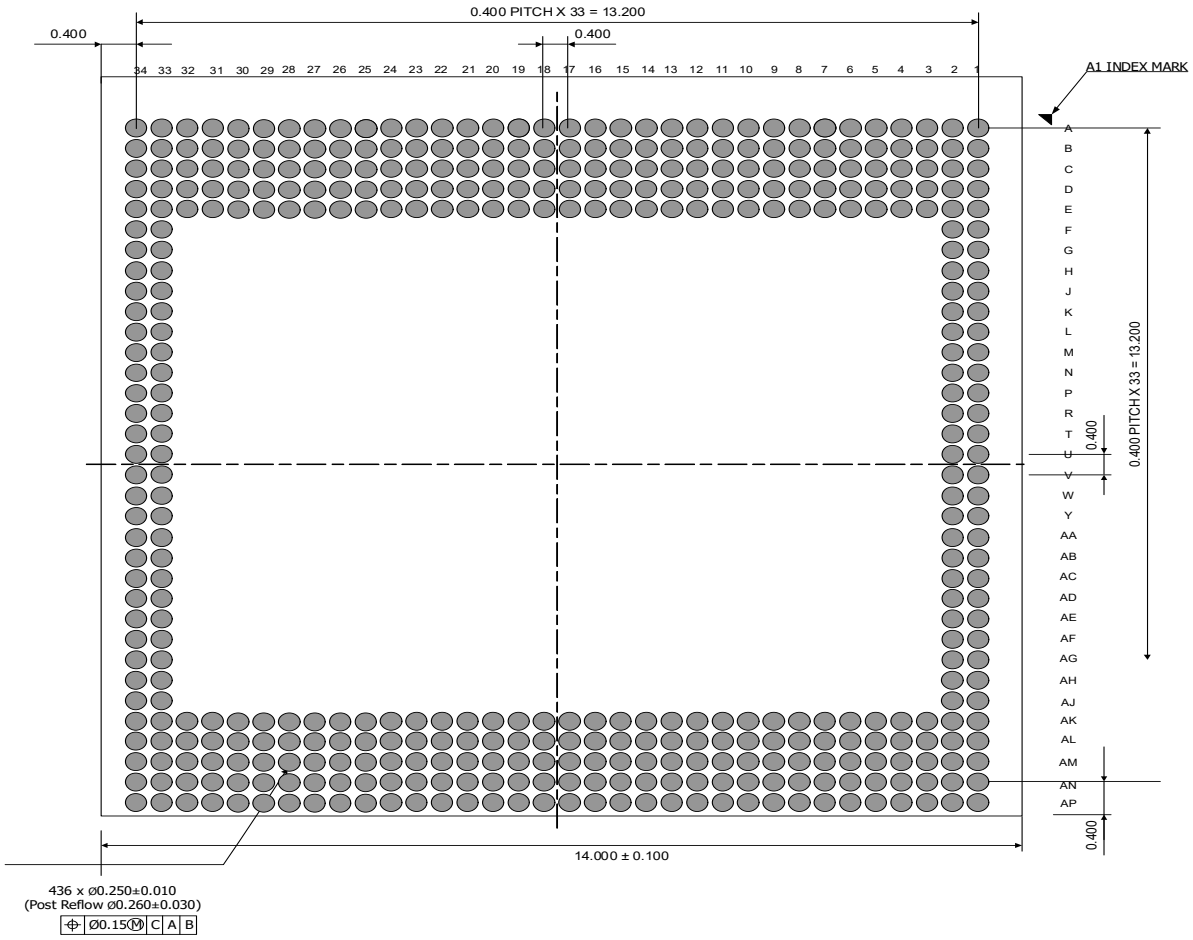


Bottom View

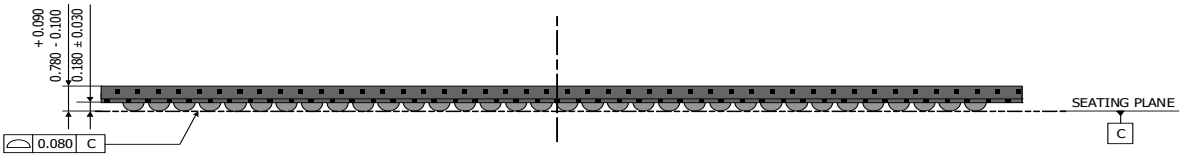


Front View

Note ) The warpage effect is included in this dimension.
Max PKG Height is 0.83mm without warpage at room temperature.

# LPDDR5 Specification
# Rev. 1.01

SK hynix Confidential

## Revision History

| Version | Description | Date | Remark |
|---|---|---|---|
| 1.00 | - 1st Release based on JESD209-5A (1/17/20)<br><br>- The following corrections have been made and reflected in this document.<br>· Default setting of BK/BG ORG in MR3 table that was missing now specified as 16B Mode ($10_B$) (**Table 64**)<br>· Some incorrect references to sections and tables and figures addressed<br>· Incorrect OP references in **Table 230** ( X8ODTD: MR17 OP[6:5] → OP[7:6] )<br>· Tables that specify Read and Write with Auto-precharge timing constraints added (**Section 8.2**)<br>· Incorrect OP referece in **Table 97** (WCK ODT of RZQ/4: OP[2:0] $110_B$ → $100_B$ ) | Feb 2020 | Preliminary |
| 1.001 | · Added a description of latency support for all types of packages – Standard, Byte-Mode, Mixed (**Section 16.1.1**) | Mar 2020 | |
| 1.01 | · Editorial update items and Committee ballots that have reached consensus in JC42.6 have been reflected (refer to the following table; Ver. 1.01)<br><br>· Incorrect timing labels in Power Ramp and Initialization Sequence addressed (**Figure 13** in **Section 4.1.1**) | May 2020 | |

In addition to JESD209-5A (Jan 2020), the following items, which have reached consensus in TG and Committee, are reflected in this document.

| Update | Ballot # | Section | Item | Ver. |
|---|---|---|---|---|
| Editorial | 1859.24 | 7.5.7 | LPDDR5 Power-Down Mode @ 2020.01.17 | 1.00 |
| Committee Ballot | 1854.48D | 15.4 | LPDDR5 DQ N-UI Tx Jitter Spec @ 2019.4Q | 1.01 |
| Committee Ballot | 1859.63 | 8.4 | LPDDR5 WRITE FIFO to READ FIFO timing @ 2020.1Q | 1.01 |
| Editorial | 1859.53 | 7.6.5 | LPDDR5 Non-target ODT @ 2020.04.03 | 1.01 |
| Editorial | N/A | 7.5.1 | LPDDR5 RFF WFF in refresh period @ 2020.04.10 | 1.01 |
| Editorial | 1854.11A | 7.6.7 | LPDDR5 Clock Frequency Change @ 2020.04.17 | 1.01 |

| | | | | |
|---|---|---|---|---|
| Editorial | 1851.80B | 11.1 | LPDDR5 Voltage Operating Conditions @ 2020.04.24 | 1.01 |
| Editorial | 1859.77 | 8.3 | LPDDR5 CAS WS Command Timing Constraints @ 2020.05.01 | 1.01 |
| Editorial | 1859.78 | 7.5.4.4 | LPDDR5 Self Refresh Exit (SRX) Command Constraints @ 2020.05.01 | 1.01 |
| Editorial | 1859.72 | 7.6.3 | LPDDR5 Frequency Set Point update Timing @ 2020.05.01 | 1.01 |
| Editorial | 1854.23 | 15.3 | LPDDR5 tWCK2DQ AC parameter @ 2020.05.01 | 1.01 |
| Editorial | 1854.81 | 7.5.1 | LPDDR5 Refresh table update @ 2020.05.08 | 1.01 |
| Committee Ballot | 1859.80 | 10 | LPDDR5 absolute maximum proposal @ 2020.2Q | 1.01 |
| Committee Ballot | 1859.68A | 7.6.5.6 | LPDDR5 NT-ODT update timing by MRW @ 2020.2Q | 1.01 |
| Editorial | 1859.34 | 7.7.5 | LPDDR5 Refresh Management @ 2020.05.21 | 1.01 |

# 1 Scope

This document defines the LPDDR5 standard, including features, functionalities, AC and DC characteristics, packages, and ball/signal assignments. The purpose of this specification is to define the minimum set of requirements for a JEDEC compliant x16 one channel SDRAM device and x8 one channel SDRAM device. LPDDR5 device density ranges from 2 Gb through 32 Gb. This document was created using aspects of the following standards: DDR2 (JESD79-2), DDR3 (JESD79-3), DDR4 (JESD79-4), LPDDR (JESD209), LPDDR2 (JESD209-2), LPDDR3 (JESD209-3) and LPDDR4 (JESD209-4).

Each aspect of the standard was considered and approved by committee ballot(s). The accumulation of these ballots was then incorporated to prepare the LPDDR5 standard.

# 2 Overview

## 2.1 Features

TBD

## 2.2 Functional Description

LPDDR5 SDRAM is a high-speed synchronous SDRAM device internally configured with 1 channel containing either 16 or 8 DQ signals. The bank architecture is user-selectable, and can be either eight banks (8B Mode), four banks with four bank groups (BG Mode), or sixteen banks (16B Mode). See the bank architecture section for more information.

Density can range from 2Gb to 32Gb. These LPDDR5 SDRAM devices contain the following number of bits:

- 2Gb has 2,147,483,648 bits
- 3Gb has 3,221,225,472 bits
- 4Gb has 4,294,967,296 bits
- 6Gb has 6,442,450,944 bits
- 8Gb has 8,589,934,592 bits
- 12Gb has 12,884,901,888 bits
- 16Gb has 17,179,869,184 bits
- 24Gb has 25,769,803,776 bits
- 32Gb has 34,359,738,368 bits

LPDDR5 SDRAM devices use a command clock (CK) that operates at a reduced rate from per-byte data clock (WCK). There are seven (DDR) command/address (CA) pins that the memory controller uses to transmit command, address, bank, configuration, and training information to the SDRAM. CA signals are latched on both the rising and falling CK edges when indicated by a high signal on the single (SDR) CS pin. Most commands are 1 nCK in duration. See the command truth table for details.

The WCK:CK ratio is user-selectable as either 2:1 or 4:1. For low-power operation the WCK is generally designed to operate only when read or write data needs to be transmitted on the bus. Due to the high speeds required for WCK, the LPDDR5 SDRAM generally implements circuitry to divide the WCK frequency immediately after the WCK receiver. This leads to a requirement to synchronize WCK to CK when the WCK needs to be re-started from an idle time. See the WCK2CK Sync section for details.

The double-data-rate I/O signaling in high-speed modes is designed to operate with on-die termination on both the memory controller and the LPDDR5 SDRAM. The high-speed I/O was designed to operate with a VDDQ of 0.5V nominal. Signals from the memory controller to the SDRAM were designed assuming a Voh of 0.5*VDDQ, or 250mV. Signals from the SDRAM to the memory controller are calibrated to 0.5*VDDQ, or 250mV nominal. In low-speed modes the signaling may operate unterminated with nominal VDDQ in a range from 0.3V – 0.5V both to and from the SDRAM, with some limitations.

Data access size depends on the bank configuration, with 16n and 32n prefetches supported. A single BL16 Read or Write access for a x16, BG mode LPDDR5 SDRAM, typically consists of a

single 256-bit-wide data transfer at the internal SDRAM core, and sixteen corresponding 16-bit wide, one half-WCK-clock-cycle data transfers at the I/O pins.

Read and Write accesses to LPDDR5 SDRAMs are burst oriented; accesses start at a selected location and continue for a programmed number of locations in a programmed sequence. Accesses begin with the registration of an Activate command. Prior to issuing a Read, Write or Mask Write command, WCK must be synchronized to CK by issuing a CAS command with (WS_RD, WS_WR or WS_FS) followed by a Read, Write or Mask Write command.

The address and BA bits registered coincident with the Activate command are used to select the row and the bank to be accessed. The address bits registered coincident with the Read, Write or Mask Write command are used to select the bank and the starting column location for the burst access.

Prior to normal operation, the LPDDR5 SDRAM is required to be initialized. The Power-Up, Initialization, and Power-off Procedure section provides detailed information covering device initialization.

### 2.2.1 Pad Definition and Description

**Table 1 — Pad Definition and Description**

| Symbol | Type | Description | Note |
|---|---|---|---|
| CK_t, CK_c | Input | **Clock:** CK_t and CK_c are differential clock inputs. All Double Data Rate (DDR) Command/Address inputs are sampled on both crossing points of CK_t and CK_c. The first crossing point is the rising(falling) edge of CK_t (CK_c) and second crossing point is falling(rising) edge of CK_t (CK_c). Single Data Rate (SDR) inputs, CS is sampled on the crossing point that is the rising(falling) edge of CK_t (CK_c). | |
| CS | Input | **Chip Select:** CS is part of the command code, and is sampled on the rising(falling) edge of CK_t (CK_c) unless the device is in power-down or Deep Sleep mode where it becomes an asynchronous signal. | |
| CA[6:0] | Input | **Command/Address Inputs:** CA signals provide the Command and Address input according to the Command Truth Table | |
| DQ[15:0] | I/O | **Data Input/Output:** Bi-direction data bus. | |
| WCK[1:0]_t<br>WCK[1:0]_c | Input | **Data Clocks:** WCK_t and WCK_c are differential clocks used for WRITE data capture and READ data output. | |
| RDQS [1:0]_t ,<br>RDQS[1:0]_c | RDQS_t :I/O,<br>RDQS_c :Output | **Read Data Strobe:** RDQS_t and RDQS_c are the differential output clock signals used to strobe data during a READ operation. And RDQS_t is also used as a Parity pin at Write with Link Protection enabled. | 1 |
| DMI[1:0] | I/O | **Data Mask Inversion:** DMI achieves multiple function such as Data Mask (DM), Data Bus Inversion (DBI), and Parity at read with ECC operation by setting the Mode Register and DMI is a bi-directional signal and each byte of data has a DMI signal. | 1 |
| ZQ | Reference | **ZQ:** ZQ is used to calibrate the output drive strength and the termination resistance as calibration reference. There is one ZQ pad per die. The ZQ pin shall be connected to VDDQ through a 240Ω ±1% resistor. | |
| $V_{DDQ}$,<br>$V_{DD1}$,<br>$V_{DD2H}$,<br>$V_{DD2L}$ | Supply | **Power Supplies:** Isolated on the die for improved noise immunity. | |
| $V_{SS}$ | GND | **Ground Reference:** Power supply ground reference | |
| RESET_n | Input | **RESET:** When asserted LOW, the RESET_n signal resets the die. Reset_n is an asynchronous signal. | |
| NOTE 1 See Table 2 and Table 3, Per-Byte Signal List/Description, for multi-function definition for these pins. | | | |

### 2.2.2 Pin per byte

**Table 2 — Pins Per-Byte Signal List/Description for Link Protection disabled**

| Pin Name | DBI Enable | SE RDQS | | SE RDQS | | Diff RDQS | |
|---|---|---|---|---|---|---|---|
| | | Link Protection disabled | | | | | |
| | | (MR20 OP[1:0]=01 | | (MR20 OP[1:0]=11 | | (MR20 OP[1:0]=10 | |
| | | Write | Read | Write | Read | Write | Read |
| #11 DMI | No | DM | N/A | DM | N/A | DM | N/A |
| | Yes | DMI | DBI | DMI | DBI | DMI | DBI |
| #12 RDQS_t | No | N/A | RDQS_t | N/A | N/A | N/A | RDQS_t |
| | Yes | N/A | RDQS_t | N/A | N/A | N/A | RDQS_t |
| #13 RDQS_c | No | N/A | N/A | N/A | RDQS_c | N/A | RDQS_c |
| | Yes | N/A | N/A | N/A | RDQS_c | N/A | RDQS_c |

**Table 3 — Pins Per-Byte Signal List/Description for Link Protection enabled**

| Pin Name | DBI Enable | SE RDQS | | SE RDQS | | Diff RDQS | |
|---|---|---|---|---|---|---|---|
| | | Link Protection enabled | | | | | |
| | | (MR20 OP[1:0]=01 | | (MR20 OP[1:0]=11 | | (MR20 OP[1:0]=10 | |
| | | Write | Read | Write | Read | Write | Read |
| #11 DMI | No | DM | parity | DM | parity | DM | parity |
| | Yes | DMI | parity | DMI | parity | DMI | parity |
| #12 RDQS_t | No | parity | RDQS_t | parity | N/A | parity | RDQS_t |
| | Yes | parity | RDQS_t | parity | N/A | parity | RDQS_t |
| #13 RDQS_c | No | N/A | N/A | N/A | RDQS_c | N/A | RDQS_c |
| | Yes | N/A | N/A | N/A | RDQS_c | N/A | RDQS_c |

### 2.2.3 LPDDR5 Bank Architecture

LPDDR5 SDRAM supports three bank architectures to provide optimal access methods for varied system configurations. The native burst length determined by data prefetch size depends on which bank architecture is enabled.

Each architecture name is abbreviated as follows:
- BG Mode = 4 banks, 4 bank groups.
- 8B Mode = 8 banks, no bank groups.
- 16B Mode = 16 banks, no bank groups.

The supported operation data rate for each Bank/Bank Group Organization is as follows:
- BG Mode for more than 3200 Mbps (>3200 Mbps).
- 8B Mode for all data rate range.
- 16B Mode for equal or less than 3200 Mbps (≤3200 Mbps).

The bank architecture is selected by MR3 OP[4:3]. This mode register is replicated for each frequency set point.

The BG and 16B modes support burst lengths of 16 or 32, while 8B mode supports only burst length 32.

#### 2.2.3.1 Block diagram of bank configuration and Read operation outline

Here are the block diagrams of each architecture.

##### 2.2.3.1.1 4Banks / 4Bank Groups Configuration

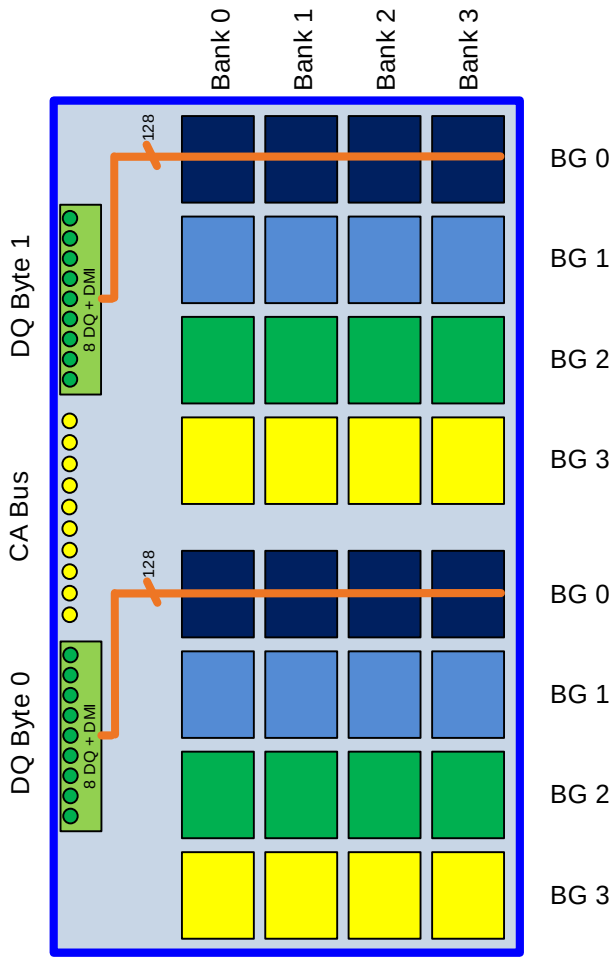


**Figure 1 — BG Mode Configuration Example (One Channel Shown)**

#### 2.2.3.1.2 8Banks Mode Configuration

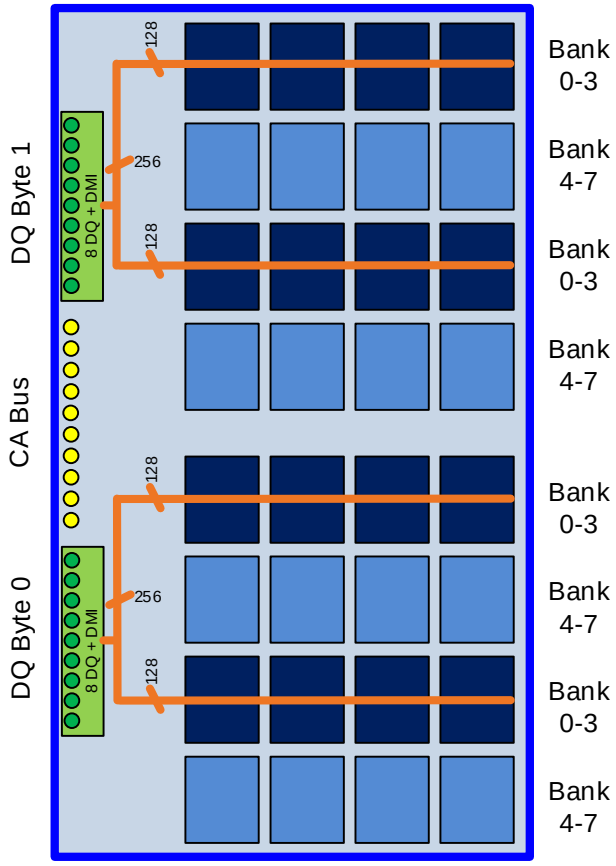


**Figure 2 — 8B Mode Configuration Example (One Channel Shown)**

#### 2.2.3.1.3 16Banks Mode Configuration

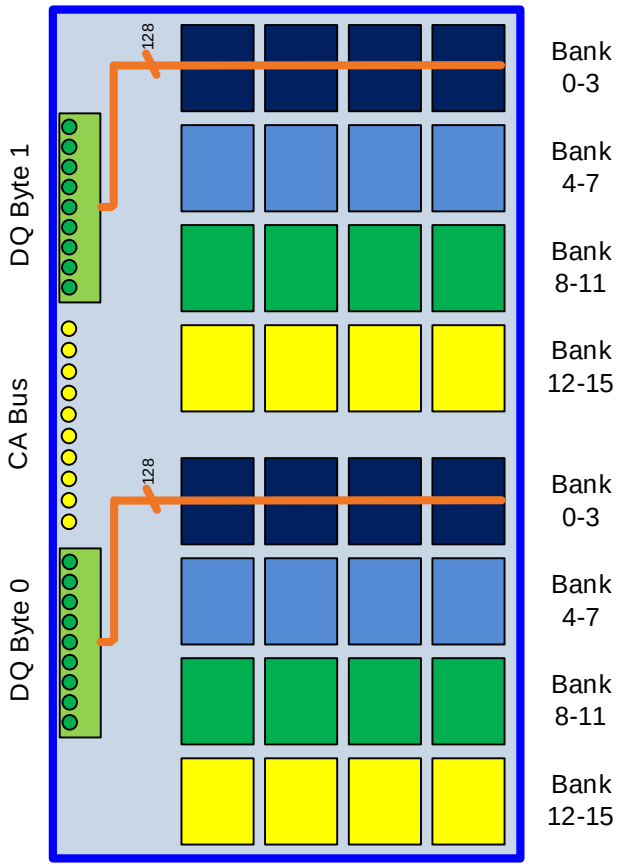


**Figure 3— 16B Mode Configuration Example (One Channel Shown)**

### 2.2.3.2 Address Translation Table

The SDRAM Address translation table in these three modes is shown below. Refer to the command truth table for detail.

**Table 4 - Address Translation Table**

| Bank Architecture Mode | CA0 | CA1 | CA2 | CA3 |
|---|---|---|---|---|
| BG | BA0 | BA1 | BG0 | BG1 |
| 8B | BA0 | BA1 | BA2 | B4 / V |
| 16B | BA0 | BA1 | BA2 | BA3 |

NOTE 1 BA0-3: Bank Address, BG0-1: Bank Group address, B4: Burst Starting Address
NOTE 2 In 8B mode, CA3 is B4 for READ and is V for ACT-1, PRE, MWR and WR.
NOTE 3 Bank address (BA) and Bank Group address (BG) in column CA0 to CA2 are physically identical. However, BA3, BG1 and Burst Starting Address(B4) in column CA3 are not physically identical, since the page size is different between BG/16B mode and 8B mode.

### 2.2.3.3 Bank architecture transition

The three bank modes can be selected by Mode Register change.

The default Bank architecture is 16B mode. If another mode would like to choose, need to change BK/BG ORG:MR3 OP[4:3] during Power-up, Initialization sequence.

16 mode and BG mode which are the same page size can be switched with an FSP procedure. On the other hand, it is necessary to do Reset to switch between 16B/BG mode and 8B mode of different page sizes.

The above-mentioned bank mode change procedure between 16B and BG mode by FSP can be executed during an Idle.

#### 2.2.3.4 Burst Operation

The Read/Write command behavior depends on the bank architecture. Read behavior is described in the following figures for example. These figures focus on Read data output behavior. Therefore, the other part, for example CAS command, WCK input is omitted. Refer to 7.4, Read and Write Operation, for details.

### 2.2.3.4 Burst Operation (Cont'd)

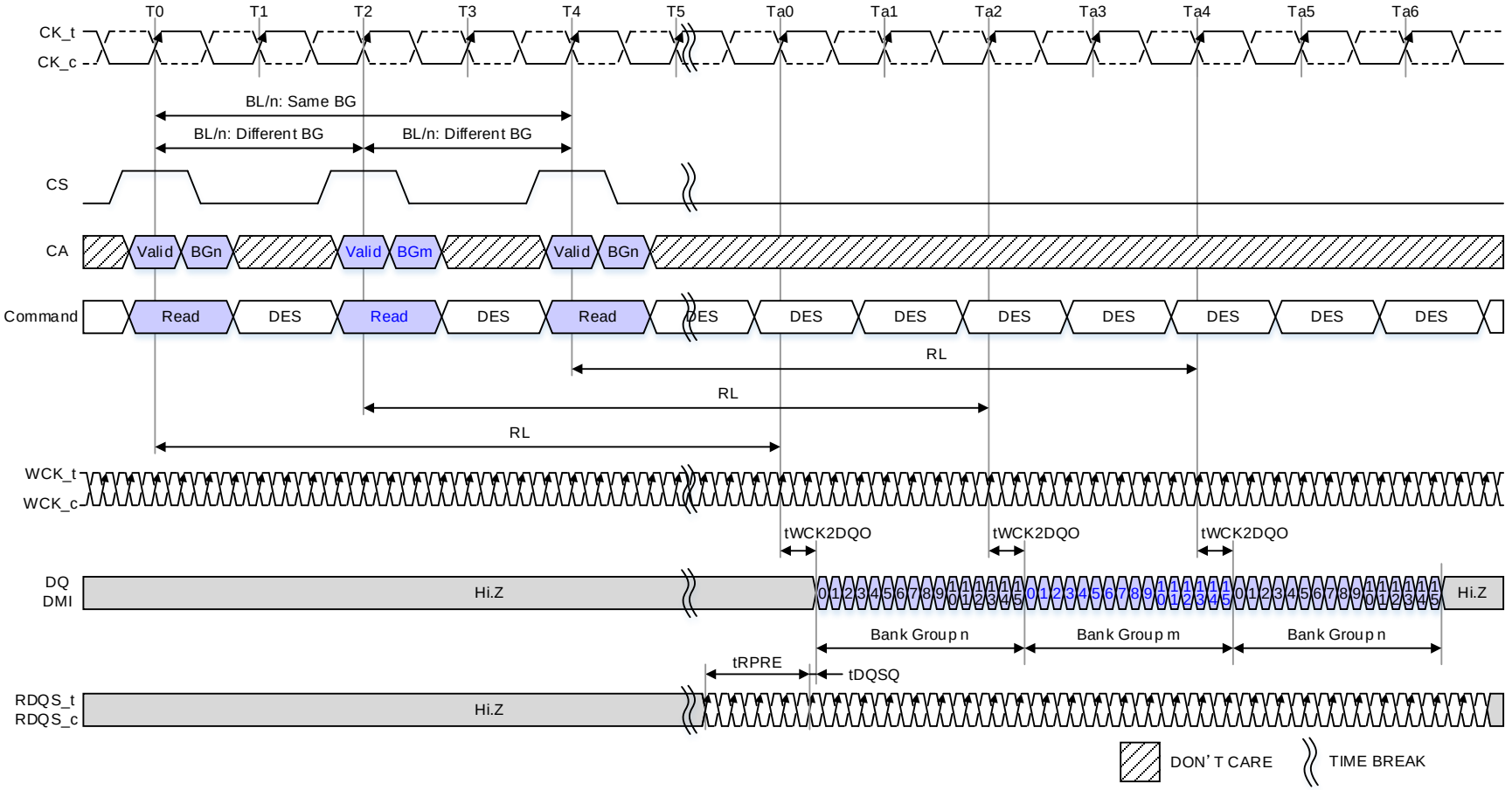


NOTE 1 MR3 OP[4:3]=$00_B$: BG Mode, MR18 OP[7]=$0_B$: CKR (WCK vs. CK)= 4:1.
NOTE 2 tWCK2CK is 0ps in this instance.
NOTE 3 DES commands are shown for ease of illustration; other commands may be valid at these times.

**Figure 4 — Read Operation BG mode, CKR (WCK vs. CK) = 4:1, BL=16**

### 2.2.3.4 Burst Operation (Cont'd)

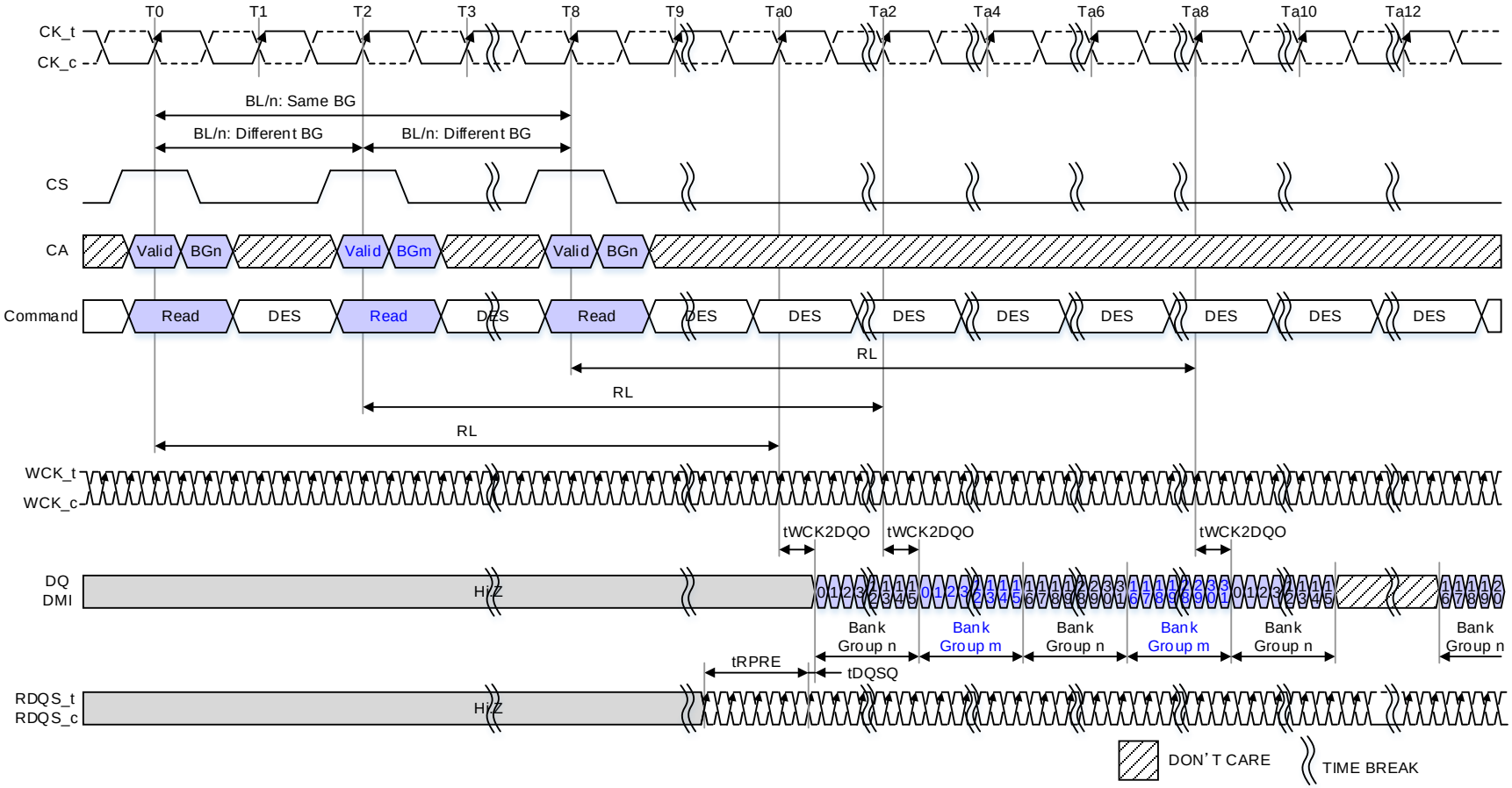


NOTE 1 MR3 OP[4:3]=$00_B$: BG mode, MR18 OP[7]=$0_B$: CKR (WCK vs. CK)= 4:1.
NOTE 2 tWCK2CK is 0ps in this instance.
NOTE 3 DES commands are shown for ease of illustration; other commands may be valid at these times.

**Figure 5 — Read Operation BG mode, CKR (WCK vs. CK) = 4:1, BL=32**

The BG Mode architecture only supports BL32 in an interleaved fashion when the WCK and CK ratio is 4:1. BL32 interleaved Reads will output the first word of DQ[15:0] after certain latency from the Read command. The second word consisting of DQ[31:16] will begin to be driven after an 8tWCK gap from the end of the first word. Figure **5** depicts BG mode Read operations for BL32 including the interleaving between bank groups. If correctly implemented, Read(BL16) command and Read32(BL32) commands can be mixed, however once a Read32(BL32) command is issued, issuing Read(BL16)/Read32(BL32) command after 3 clocks is prohibited, to avoid read data conflict.

The relationship between preceding Write32(BL32) and Write(BL16)/Write32(BL32) is the same as preceding Read32(BL32) and Read(BL16)/Read32(BL32).

### 2.2.3.4 Burst Operation (Cont'd)

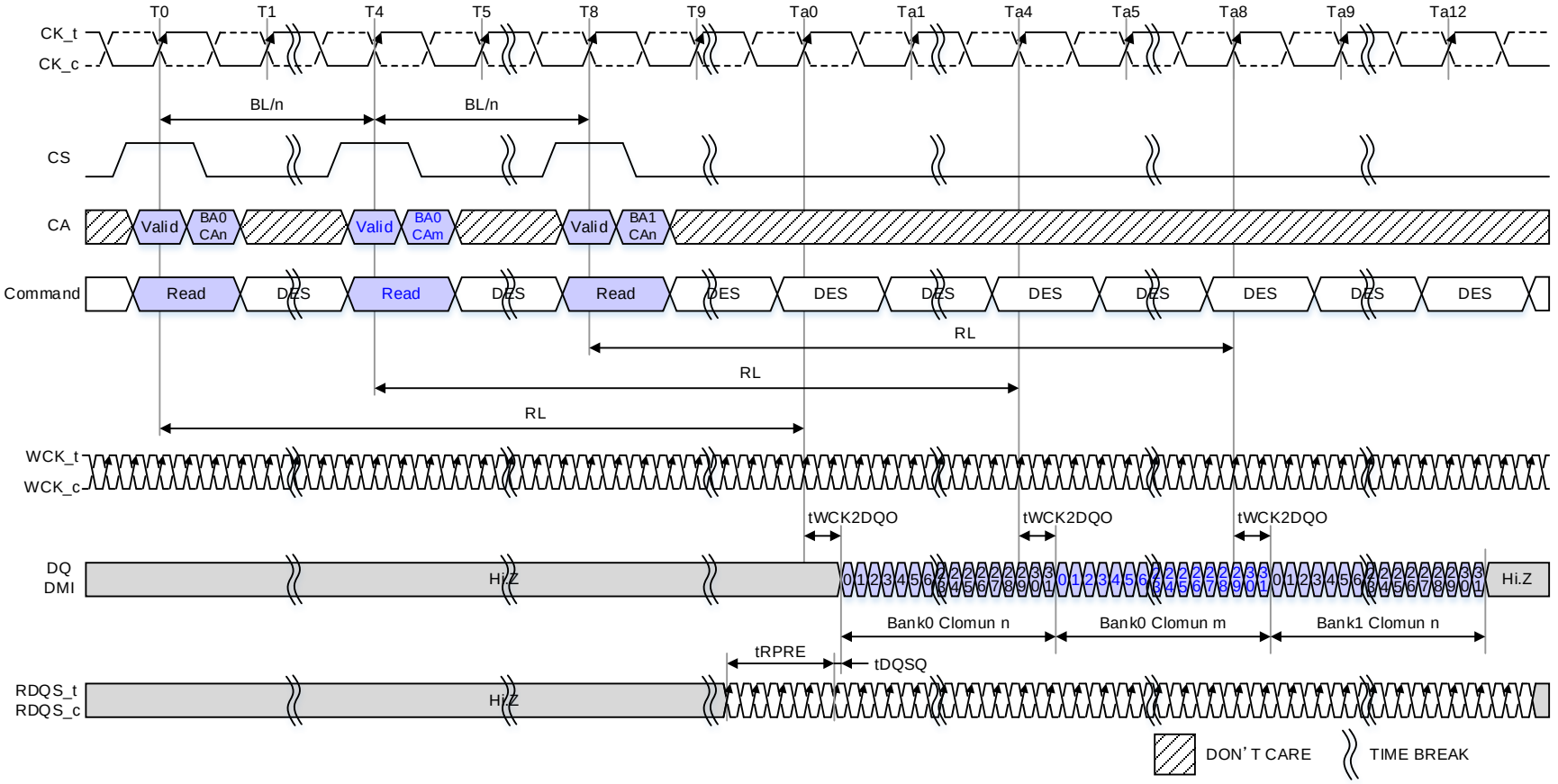


NOTE 1 MR3 OP[4:3]=$01_B$: 8B mode, MR18 OP[7]=$0_B$: CKR (WCK vs. CK)= 4:1
NOTE 2 tWCK2CK is 0ps in this instance.
NOTE 3 DES commands are shown for ease of illustration; other commands may be valid at these times.

**Figure 6 — Read Operation 8B mode, CKR (WCK vs. CK) = 4:1, BL=32**

### 2.2.3.4 Burst Operation (Cont'd)

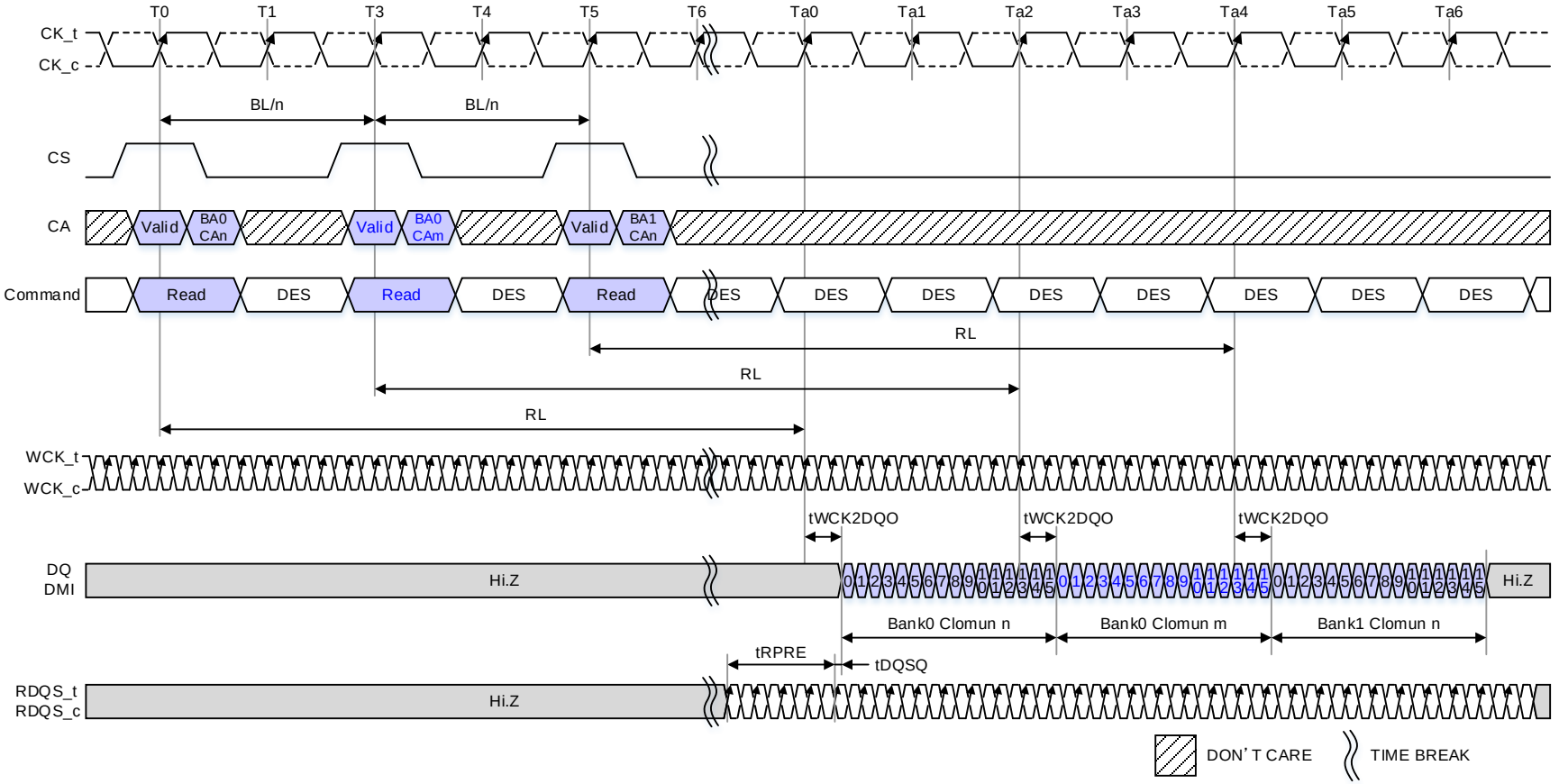


NOTE 1 MR3 OP[4:3]=10B: 16B Mode, MR18 OP[7]=0B: CKR (WCK vs. CK)= 4:1.
NOTE 2 tWCK2CK is 0ps in this instance.
NOTE 3 DES commands are shown for ease of illustration; other commands may be valid at these times.

**Figure 7 — Read Operation 16B mode, CKR (WCK vs. CK) = 4:1, BL=16**

### 2.2.3.4 Burst Operation (Cont'd)

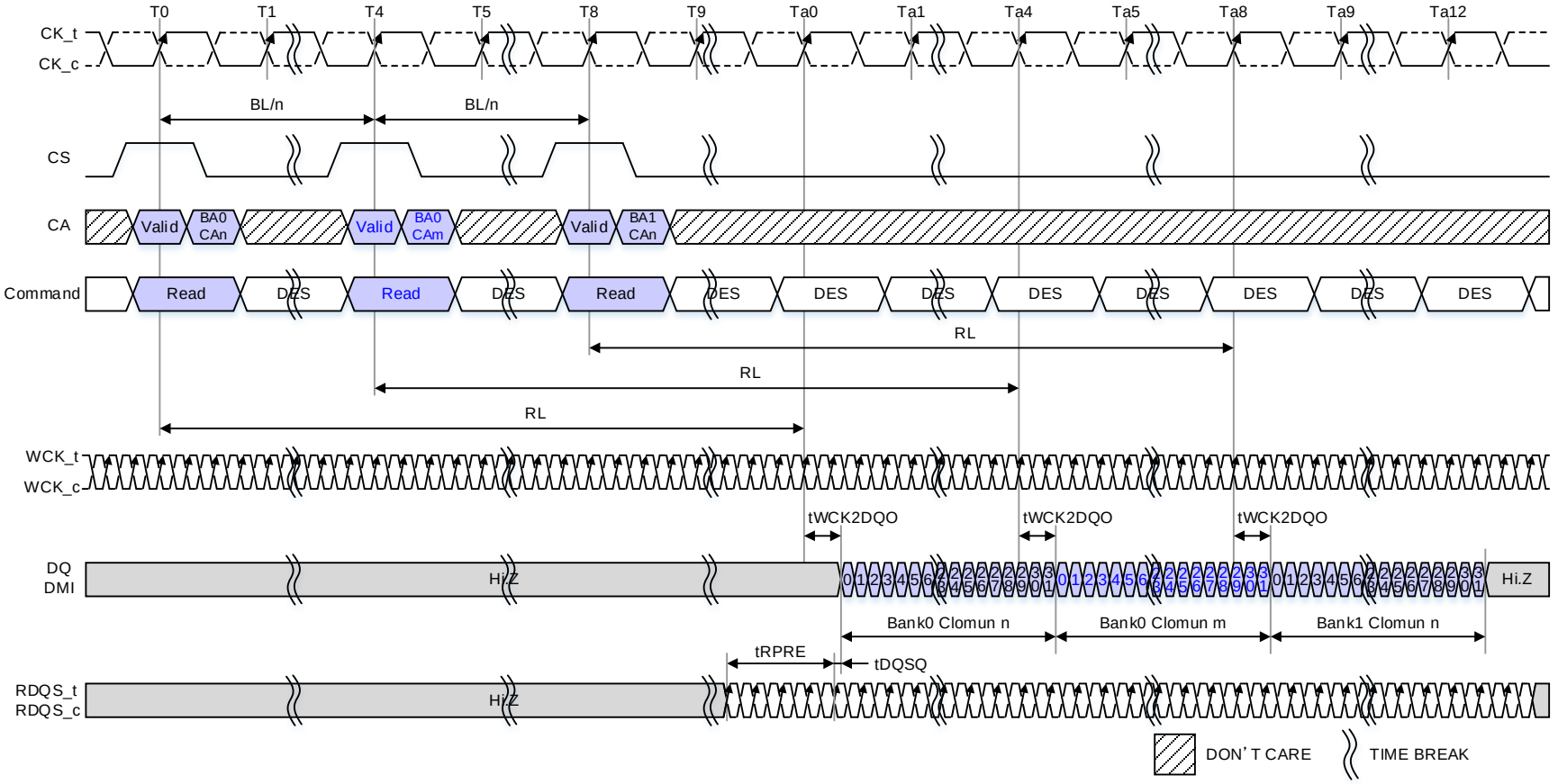


NOTE 1 MR3 OP[4:3]=10B: 16B mode, MR18 OP[7]=0B: CKR (WCK vs. CK)= 4:1.
NOTE 2 tWCK2CK is 0ps in this instance.
NOTE 3 DES commands are shown for ease of illustration; other commands may be valid at these times.

**Figure 8 — Read Operation 16B mode, CKR (WCK vs. CK) = 4:1, BL=32**

### 2.2.4 LPDDR5 SDRAM Addressing

**Table 5 — LPDDR5 SDRAM x16 mode Addressing for BG Mode (4Banks/4Bank Groups)**

| Memory Density | 2Gb | 3Gb | 4Gb | 6Gb | 8Gb | 12Gb | 16Gb | 24Gb | 32Gb |
|---|---|---|---|---|---|---|---|---|---|
| Configuration | 8Mb x 16DQ x 4 BG x 4 banks | 12Mb x 16DQ x 4 BG x 4 banks | 16Mb x 16DQ x 4 BG x 4 banks | 24Mb x 16DQ x 4 BG x 4 banks | 32Mb x 16DQ x 4 BG x 4 banks | 48Mb x 16DQ x 4 BG x 4 banks | 64Mb x 16DQ x 4 BG x 4 banks | 96Mb x 16DQ x 4 BG x 4 banks | 128Mb x 16DQ x 4 BG x 4 banks |
| Number of Banks in BG | 4 | 4 | 4 | 4 | 4 | 4 | 4 | 4 | 4 |
| Number of Bank Groups | 4 | 4 | 4 | 4 | 4 | 4 | 4 | 4 | 4 |
| Array Pre-Fetch | 256 | 256 | 256 | 256 | 256 | 256 | 256 | 256 | 256 |
| Number of Rows | 8,192 | 12,288 | 16,384 | 24,576 | 32,768 | 49,152 | 65,536 | 98,304 | 131,072 |
| Number of Columns (fetch boundaries) | 64 | 64 | 64 | 64 | 64 | 64 | 64 | 64 | 64 |
| Page Size (Bytes) | 2,048 | 2,048 | 2,048 | 2,048 | 2,048 | 2,048 | 2,048 | 2,048 | 2,048 |
| Density | 2,147,483,648 | 3,221,225,472 | 4,294,967,296 | 6,442,450,944 | 8,589,934,592 | 12,884,901,888 | 17,179,869,184 | 25,769,803,776 | 34,359,738,368 |
| Bank Address | BA0 - BA1 | BA0 - BA1 | BA0 - BA1 | BA0 - BA1 | BA0 - BA1 | BA0 - BA1 | BA0 - BA1 | BA0 - BA1 | BA0 - BA1 |
| Bank Group Addresses | BG0 - BG1 | BG0 - BG1 | BG0 - BG1 | BG0 - BG1 | BG0 - BG1 | BG0 - BG1 | BG0 - BG1 | BG0 - BG1 | BG0 - BG1 |
| Row Addresses | R0 - R12 | R0 - R13 (R12=0 when R13=1) | R0 - R13 | R0 - R14 (R13=0 when R14=1) | R0 - R14 | R0 - R15 (R14=0 when R15=1) | R0 - R15 | R0 - R16 (R15=0 when R16=1) | R0 - R16 |
| Column Addresses | C0-C5 | C0-C5 | C0-C5 | C0-C5 | C0-C5 | C0-C5 | C0-C5 | C0-C5 | C0-C5 |
| Burst Addresses | B0-B3 | B0-B3 | B0-B3 | B0-B3 | B0-B3 | B0-B3 | B0-B3 | B0-B3 | B0-B3 |
| Burst Starting Address Boundary | 128-bit | 128-bit | 128-bit | 128-bit | 128-bit | 128-bit | 128-bit | 128-bit | 128-bit |
| Native Burst Length | 16 | 16 | 16 | 16 | 16 | 16 | 16 | 16 | 16 |

NOTE 1 The lower three burst addresses (B0-B2) are assumed to be "zero" and are not transmitted on the CA bus.

NOTE 2 Row and Column address values on the CA bus that are not used for a particular density must be at valid logic levels.

NOTE 3 For non - binary memory densities, only quarter of the row address space is invalid. When the MSB address bit is "HIGH", then the MSB - 1 address bit must be "LOW".

NOTE 4 The row address input which violates the restriction described in Note 3 in this table may result in undefined or vendor specific behavior. Consult the memory vendor for more information.

### 2.2.4 LPDDR5 SDRAM Addressing (Cont'd)

**Table 6 — LPDDR5 SDRAM x8 mode Addressing for BG Mode**

| Memory Density | 2Gb | 3Gb | 4Gb | 6Gb | 8Gb | 12Gb | 16Gb | 24Gb | 32Gb |
|---|---|---|---|---|---|---|---|---|---|
| Configuration | 16Mb x 8DQ x 4 BG x 4 banks | 24Mb x 8DQ x 4 BG x 4 banks | 32Mb x 8DQ x 4 BG x 4 banks | 48Mb x 8DQ x 4 BG x 4 banks | 64Mb x 8DQ x 4 BG x 4 banks | 96Mb x 8DQ x 4 BG x 4 banks | 128Mb x 8DQ x 4 BG x 4 banks | 196Mb x 8DQ x 4 BG x 4 banks | 256Mb x 8DQ x 4 BG x 4 banks |
| Number of Banks in BG | 4 | 4 | 4 | 4 | 4 | 4 | 4 | 4 | 4 |
| Number of Bank Groups | 4 | 4 | 4 | 4 | 4 | 4 | 4 | 4 | 4 |
| Array Pre-Fetch | 128 | 128 | 128 | 128 | 128 | 128 | 128 | 128 | 128 |
| Number of Rows | 16,384 | 24,576 | 32,768 | 49,152 | 65,536 | 98,304 | 131,072 | 196,608 | 262,144 |
| Number of Columns (fetch boundaries) | 64 | 64 | 64 | 64 | 64 | 64 | 64 | 64 | 64 |
| Page Size (Bytes) | 1,024 | 1,024 | 1,024 | 1,024 | 1,024 | 1,024 | 1,024 | 1,024 | 1,024 |
| Density | 2,147,483,648 | 3,221,225,472 | 4,294,967,296 | 6,442,450,944 | 8,589,934,592 | 12,884,901,888 | 17,179,869,184 | 25,769,803,776 | 34,359,738,368 |
| Bank Address | BA0 - BA1 | BA0 - BA1 | BA0 - BA1 | BA0 - BA1 | BA0 - BA1 | BA0 - BA1 | BA0 - BA1 | BA0 - BA1 | BA0 - BA1 |
| Bank Group Addresses | BG0 - BG1 | BG0 - BG1 | BG0 - BG1 | BG0 - BG1 | BG0 - BG1 | BG0 - BG1 | BG0 - BG1 | BG0 - BG1 | BG0 - BG1 |
| Row Addresses | R0 - R13 | R0 - R14 (R13=0 when R14=1) | R0 - R14 | R0 - R15 (R14=0 when R15=1) | R0 - R15 | R0 - R16 (R15=0 when R16=1) | R0 - R16 | R0 - R17 (R16=0 when R17=1) | R0 - R17 |
| Column Addresses | C0-C5 | C0-C5 | C0-C5 | C0-C5 | C0-C5 | C0-C5 | C0-C5 | C0-C5 | C0-C5 |
| Burst Addresses | B0-B3 | B0-B3 | B0-B3 | B0-B3 | B0-B3 | B0-B3 | B0-B3 | B0-B3 | B0-B3 |
| Burst Starting Address Boundary | 128-bit | 128-bit | 128-bit | 128-bit | 128-bit | 128-bit | 128-bit | 128-bit | 128-bit |
| Native Burst Length | 16 | 16 | 16 | 16 | 16 | 16 | 16 | 16 | 16 |

NOTE 1 The lower three burst addresses (B0-B2) are assumed to be "zero" and are not transmitted on the CA bus.

NOTE 2 Row and Column address values on the CA bus that are not used for a particular density must be at valid logic levels.

NOTE 3 For non - binary memory densities, only quarter of the row address space is invalid. When the MSB address bit is "HIGH", then the MSB - 1 address bit must be "LOW".

NOTE 4 The row address input which violates the restriction described in Note 3 in this table may result in undefined or vendor specific behavior. Consult the memory vendor for more information.

### 2.2.4 LPDDR5 SDRAM Addressing (Cont'd)

**Table 7 — LPDDR5 SDRAM x16 mode Addressing for 8B Mode**

| Memory Density | 2Gb | 3Gb | 4Gb | 6Gb | 8Gb | 12Gb | 16Gb | 24Gb | 32Gb |
|---|---|---|---|---|---|---|---|---|---|
| Configuration | 16Mb x 16DQ x 8 banks | 24Mb x 16DQ x 8 banks | 32Mb x 16DQ x 8 banks | 48Mb x 16DQ x 8 banks | 64Mb x 16DQ x 8 banks | 96Mb x 16DQ x 8 banks | 128Mb x 16DQ x 8 banks | 192Mb x 16DQ x 8 banks | 256Mb x 16DQ x 8 banks |
| Number of Banks | 8 | 8 | 8 | 8 | 8 | 8 | 8 | 8 | 8 |
| Array Pre-Fetch | 512 | 512 | 512 | 512 | 512 | 512 | 512 | 512 | 512 |
| Number of Rows | 8,192 | 12,288 | 16,384 | 24,576 | 32,768 | 49,152 | 65,536 | 98,304 | 131,072 |
| Number of Columns (fetch boundaries) | 64 | 64 | 64 | 64 | 64 | 64 | 64 | 64 | 64 |
| Page Size (Bytes) | 4,096 | 4,096 | 4,096 | 4,096 | 4,096 | 4,096 | 4,096 | 4,096 | 4,096 |
| Density | 2,147,483,648 | 3,221,225,472 | 4,294,967,296 | 6,442,450,944 | 8,589,934,592 | 12,884,901,888 | 17,179,869,184 | 25,769,803,776 | 34,359,738,368 |
| Bank Address | BA0 - BA2 | BA0 - BA2 | BA0 - BA2 | BA0 - BA2 | BA0 - BA2 | BA0 - BA2 | BA0 - BA2 | BA0 - BA2 | BA0 - BA2 |
| Row Addresses | R0 - R12 | R0 - R13 (R12=0 when R13=1) | R0 - R13 | R0 - R14 (R13=0 when R14=1) | R0 - R14 | R0 - R15 (R14=0 when R15=1) | R0 - R15 | R0 - R16 (R15=0 when R16=1) | R0 - R16 |
| Column Addresses | C0-C5 | C0-C5 | C0-C5 | C0-C5 | C0-C5 | C0-C5 | C0-C5 | C0-C5 | C0-C5 |
| Burst Addresses | B0-B4 | B0-B4 | B0-B4 | B0-B4 | B0-B4 | B0-B4 | B0-B4 | B0-B4 | B0-B4 |
| Burst Starting Address Boundary | 128-bit | 128-bit | 128-bit | 128-bit | 128-bit | 128-bit | 128-bit | 128-bit | 128-bit |
| Native Burst Length | 32 | 32 | 32 | 32 | 32 | 32 | 32 | 32 | 32 |

NOTE 1 The lower three burst addresses (B0-B2) are assumed to be "zero" and are not transmitted on the CA bus.

NOTE 2 Row and Column address values on the CA bus that are not used for a particular density must be at valid logic levels.

NOTE 3 For non - binary memory densities, only quarter of the row address space is invalid. When the MSB address bit is "HIGH", then the MSB - 1 address bit must be "LOW".

NOTE 4 The row address input which violates the restriction described in Note 3 in this table may result in undefined or vendor specific behavior. Consult the memory vendor for more information.

### 2.2.4 LPDDR5 SDRAM Addressing (Cont'd)

**Table 8 — LPDDR5 SDRAM x8 mode Addressing for 8B Mode**

| Memory Density | 2Gb | 3Gb | 4Gb | 6Gb | 8Gb | 12Gb | 16Gb | 24Gb | 32Gb |
|---|---|---|---|---|---|---|---|---|---|
| Configuration | 32Mb x 8DQ x 8 banks | 48Mb x 8DQ x 8 banks | 64Mb x 8DQ x 8 banks | 96Mb x 8DQ x 8 banks | 128Mb x 8DQ x 8 banks | 192Mb x 8DQ x 8 banks | 256Mb x 8DQ x 8 banks | 384Mb x 16DQ x 8 banks | 512Mb x 8DQ x 8 banks |
| Number of Banks | 8 | 8 | 8 | 8 | 8 | 8 | 8 | 8 | 8 |
| Array Pre-Fetch | 256 | 256 | 256 | 256 | 256 | 256 | 256 | 256 | 256 |
| Number of Rows | 16,384 | 24,576 | 32,768 | 49,152 | 65,536 | 98,304 | 131,072 | 196,608 | 262,144 |
| Number of Columns (fetch boundaries) | 64 | 64 | 64 | 64 | 64 | 64 | 64 | 64 | 64 |
| Page Size (Bytes) | 2,048 | 2,048 | 2,048 | 2,048 | 2,048 | 2,048 | 2,048 | 2,048 | 2,048 |
| Density | 2,147,483,648 | 3,221,225,472 | 4,294,967,296 | 6,442,450,944 | 8,589,934,592 | 12,884,901,888 | 17,179,869,184 | 25,769,803,776 | 34,359,738,368 |
| Bank Address | BA0 - BA2 | BA0 - BA2 | BA0 - BA2 | BA0 - BA2 | BA0 - BA2 | BA0 - BA2 | BA0 - BA2 | BA0 - BA2 | BA0 - BA2 |
| Row Addresses | R0 - R13 | R0 - R14 (R13=0 when R14=1) | R0 - R14 | R0 - R15 (R14=0 when R15=1) | R0 - R15 | R0 - R16 (R15=0 when R16=1) | R0 - R16 | R0 - R17 (R16=0 when R17=1) | R0 - R17 |
| Column Addresses | C0-C5 | C0-C5 | C0-C5 | C0-C5 | C0-C5 | C0-C5 | C0-C5 | C0-C5 | C0-C5 |
| Burst Addresses | B0-B4 | B0-B4 | B0-B4 | B0-B4 | B0-B4 | B0-B4 | B0-B4 | B0-B4 | B0-B4 |
| Burst Starting Address Boundary | 128-bit | 128-bit | 128-bit | 128-bit | 128-bit | 128-bit | 128-bit | 128-bit | 128-bit |
| Native Burst Length | 32 | 32 | 32 | 32 | 32 | 32 | 32 | 32 | 32 |

NOTE 1 The lower three burst addresses (B0-B2) are assumed to be "zero" and are not transmitted on the CA bus.

NOTE 2 Row and Column address values on the CA bus that are not used for a particular density must be at valid logic levels.

NOTE 3 For non - binary memory densities, only quarter of the row address space is invalid. When the MSB address bit is "HIGH", then the MSB - 1 address bit must be "LOW".

NOTE 4 The row address input which violates the restriction described in Note 3 in this table may result in undefined or vendor specific behavior. Consult the memory vendor for more information.

### 2.2.4 LPDDR5 SDRAM Addressing (Cont'd)

**Table 9 — LPDDR5 SDRAM x16 mode Addressing for 16B Mode**

| Memory Density | 2Gb | 3Gb | 4Gb | 6Gb | 8Gb | 12Gb | 16Gb | 24Gb | 32Gb |
|---|---|---|---|---|---|---|---|---|---|
| Configuration | 8Mb x 16DQ x 16 banks | 12Mb x 16DQ x 16 banks | 16Mb x 16DQ x 16 banks | 24Mb x 16DQ x 16 banks | 32Mb x 16DQ x 16 banks | 48Mb x 16DQ x 16 banks | 64Mb x 16DQ x 16 banks | 96Mb x 16DQ x 16 banks | 128Mb x 16DQ x 16 banks |
| Number of Banks | 16 | 16 | 16 | 16 | 16 | 16 | 16 | 16 | 16 |
| Array Pre-Fetch | 256 | 256 | 256 | 256 | 256 | 256 | 256 | 256 | 256 |
| Number of Rows | 8,192 | 12,288 | 16,384 | 24,576 | 32,768 | 49,152 | 65,536 | 98,304 | 131,072 |
| Number of Columns (fetch boundaries) | 64 | 64 | 64 | 64 | 64 | 64 | 64 | 64 | 64 |
| Page Size (Bytes) | 2,048 | 2,048 | 2,048 | 2,048 | 2,048 | 2,048 | 2,048 | 2,048 | 2,048 |
| Density | 2,147,483,648 | 3,221,225,472 | 4,294,967,296 | 6,442,450,944 | 8,589,934,592 | 12,884,901,888 | 17,179,869,184 | 25,769,803,776 | 34,359,738,368 |
| Bank Address | BA0 - BA3 | BA0 - BA3 | BA0 - BA3 | BA0 - BA3 | BA0 - BA3 | BA0 - BA3 | BA0 - BA3 | BA0 - BA3 | BA0 - BA3 |
| Row Addresses | R0 - R12 | R0 - R13 (R12=0 when R13=1) | R0 - R13 | R0 - R14 (R13=0 when R14=1) | R0 - R14 | R0 - R15 (R14=0 when R15=1) | R0 - R15 | R0 - R16 (R15=0 when R16=1) | R0 - R16 |
| Column Addresses | C0-C5 | C0-C5 | C0-C5 | C0-C5 | C0-C5 | C0-C5 | C0-C5 | C0-C5 | C0-C5 |
| Burst Addresses | B0-B3 | B0-B3 | B0-B3 | B0-B3 | B0-B3 | B0-B3 | B0-B3 | B0-B3 | B0-B3 |
| Burst Starting Address Boundary | 128-bit | 128-bit | 128-bit | 128-bit | 128-bit | 128-bit | 128-bit | 128-bit | 128-bit |
| Native Burst Length | 16 | 16 | 16 | 16 | 16 | 16 | 16 | 16 | 16 |

NOTE 1 The lower three burst addresses (B0-B2) are assumed to be "zero" and are not transmitted on the CA bus.

NOTE 2 Row and Column address values on the CA bus that are not used for a particular density must be at valid logic levels.

NOTE 3 For non - binary memory densities, only quarter of the row address space is invalid. When the MSB address bit is "HIGH", then the MSB - 1 address bit must be "LOW".

NOTE 4 The row address input which violates the restriction described in Note 3 in this table may result in undefined or vendor specific behavior. Consult the memory vendor for more information.

### 2.2.4 LPDDR5 SDRAM Addressing (Cont'd)

**Table 10 — LPDDR5 SDRAM x8 mode Addressing for 16B Mode**

| Memory Density | 2Gb | 3Gb | 4Gb | 6Gb | 8Gb | 12Gb | 16Gb | 24Gb | 32Gb |
|---|---|---|---|---|---|---|---|---|---|
| Configuration | 16Mb x 8DQ x 16 banks | 24Mb x 8DQ x 16 banks | 32Mb x 8DQ x 16 banks | 48Mb x 8DQ x 16 banks | 64Mb x 8DQ x 16 banks | 96Mb x 8DQ x 16 banks | 128Mb x 8DQ x 16 banks | 192Mb x 8DQ x 16 banks | 256Mb x 8DQ x 16 banks |
| Number of Banks | 16 | 16 | 16 | 16 | 16 | 16 | 16 | 16 | 16 |
| Array Pre-Fetch | 128 | 128 | 128 | 128 | 128 | 128 | 128 | 128 | 128 |
| Number of Rows | 16,384 | 24,576 | 32,768 | 49,152 | 65,536 | 98,304 | 131,072 | 196,608 | 262,144 |
| Number of Columns (fetch boundaries) | 64 | 64 | 64 | 64 | 64 | 64 | 64 | 64 | 64 |
| Page Size (Bytes) | 1,024 | 1,024 | 1,024 | 1,024 | 1,024 | 1,024 | 1,024 | 1,024 | 1,024 |
| Density | 2,147,483,648 | 3,221,225,472 | 4,294,967,296 | 6,442,450,944 | 8,589,934,592 | 12,884,901,888 | 17,179,869,184 | 25,769,803,776 | 34,359,738,368 |
| Bank Address | BA0 - BA3 | BA0 - BA3 | BA0 - BA3 | BA0 - BA3 | BA0 - BA3 | BA0 - BA3 | BA0 - BA3 | BA0 - BA3 | BA0 - BA3 |
| Row Addresses | R0 - R13 | R0 - R14 (R13=0 when R14=1) | R0 - R14 | R0 - R15 (R14=0 when R15=1) | R0 - R15 | R0 - R16 (R15=0 when R16=1) | R0 - R16 | R0 - R17 (R16=0 when R17=1) | R0 - R17 |
| Column Addresses | C0-C5 | C0-C5 | C0-C5 | C0-C5 | C0-C5 | C0-C5 | C0-C5 | C0-C5 | C0-C5 |
| Burst Addresses | B0-B3 | B0-B3 | B0-B3 | B0-B3 | B0-B3 | B0-B3 | B0-B3 | B0-B3 | B0-B3 |
| Burst Starting Address Boundary | 128-bit | 128-bit | 128-bit | 128-bit | 128-bit | 128-bit | 128-bit | 128-bit | 128-bit |
| Native Burst Length | 16 | 16 | 16 | 16 | 16 | 16 | 16 | 16 | 16 |

NOTE 1 The lower three burst addresses (B0-B2) are assumed to be "zero" and are not transmitted on the CA bus.

NOTE 2 Row and Column address values on the CA bus that are not used for a particular density must be at valid logic levels.

NOTE 3 For non - binary memory densities, only quarter of the row address space is invalid. When the MSB address bit is "HIGH", then the MSB - 1 address bit must be "LOW".

NOTE 4 The row address input which violates the restriction described in Note 3 in this table may result in undefined or vendor specific behavior. Consult the memory vendor for more information.

### 2.2.5 Speed Grades

**Table 11 — LPDDR5 Speed Grades**

| OPERATING MODE / SPEED GRADE | | | LPDDR5-5500 | LPDDR5-6400 | Unit |
|---|---|---|---|---|---|
| DVFSC[2] | WCK:CK Ratio[3] | Banks[4] | Maximum Data Rate[1] | | |
| Disabled | 4:1 | BG | 5500 | 6400 | Mbps |
| Disabled | 4:1 | 8B | 5500 | 6400 | |
| Disabled | 4:1 | 16B | 3200 | 3200 | |
| Disabled | 2:1 | BG | Not Supported | | |
| Disabled | 2:1 | 8B | 3200 | 3200 | |
| Disabled | 2:1 | 16B | 3200 | 3200 | |
| Enabled | 4:1 | BG | Not Supported | | |
| Enabled | 4:1 | 8B | 1600 | 1600 | |
| Enabled | 4:1 | 16B | 1600 | 1600 | |
| Enabled | 2:1 | BG | Not Supported | | |
| Enabled | 2:1 | 8B | 1600 | 1600 | |
| Enabled | 2:1 | 16B | 1600 | 1600 | |
| Link ECC Feature support by DRAM | | | Optional | Required | |

NOTE 1 Speed grades represent the maximum data rate capability of the device. Higher speed grade devices can be operated at lower data rates. Achieving maximum data rates requires appropriate latency settings.

NOTE 2 DVFSC is enabled/disabled in MR19 OP[1:0] and MR13 OP[7].

NOTE 3 WCK:CK ratio is set in MR18 OP[7].

NOTE 4 Bank organization (BG, 8B or 16B) is set in MR3 OP[4:3].

NOTE 5 DVFSQ is supported up to TBD Mbps for all speed grades.

### 2.2.6 Burst Sequence

**Table 12 — Burst Sequence for READ (8bank mode)**

| Burst Length | Burst Type | B4 | B3 | B2 | B1 | B0 | Burst Cycle Number and Burst Address Sequence | | | | | | | | | | | | | | | | | | | | | | | | | | | | | | | | |
|---|---|---|---|---|---|---|---|---|---|---|---|---|---|---|---|---|---|---|---|---|---|---|---|---|---|---|---|---|---|---|---|---|---|---|---|---|---|---|---|
| | | | | | | | 1 | 2 | 3 | 4 | 5 | 6 | 7 | 8 | 9 | 10 | 11 | 12 | 13 | 14 | 15 | 16 | 17 | 18 | 19 | 20 | 21 | 22 | 23 | 24 | 25 | 26 | 27 | 28 | 29 | 30 | 31 | 32 |
| 32 | SEQ | 0 | 0 | 0 | 0 | 0 | 0 | 1 | 2 | 3 | 4 | 5 | 6 | 7 | 8 | 9 | A | B | C | D | E | F | 10 | 11 | 12 | 13 | 14 | 15 | 16 | 17 | 18 | 19 | 1A | 1B | 1C | 1D | 1E | 1F |
| | | 0 | 1 | 0 | 0 | 0 | 8 | 9 | A | B | C | D | E | F | 0 | 1 | 2 | 3 | 4 | 5 | 6 | 7 | 18 | 19 | 1A | 1B | 1C | 1D | 1E | 1F | 10 | 11 | 12 | 13 | 14 | 15 | 16 | 17 |
| | | 1 | 0 | 0 | 0 | 0 | 10 | 11 | 12 | 13 | 14 | 15 | 16 | 17 | 18 | 19 | 1A | 1B | 1C | 1D | 1E | 1F | 0 | 1 | 2 | 3 | 4 | 5 | 6 | 7 | 8 | 9 | A | B | C | D | E | F |
| | | 1 | 1 | 0 | 0 | 0 | 18 | 19 | 1A | 1B | 1C | 1D | 1E | 1F | 10 | 11 | 12 | 13 | 14 | 15 | 16 | 17 | 8 | 9 | A | B | C | D | E | F | 0 | 1 | 2 | 3 | 4 | 5 | 6 | 7 |

NOTE 1 B0-B2 are assumed to be '0', and are not transmitted on the command bus.
NOTE 2 The starting burst address is on 128-bit (8n) boundaries.

**Table 13 — Burst Sequence for READ (4bank/ 4Bank Group mode or 16Bank mode)**

| Burst Length | Burst Type | C0 | B3 | B2 | B1 | B0 | Burst Cycle Number and Burst Address Sequence | | | | | | | | | | | | | | | | | | | | | | | | | | | | | | | | |
|---|---|---|---|---|---|---|---|---|---|---|---|---|---|---|---|---|---|---|---|---|---|---|---|---|---|---|---|---|---|---|---|---|---|---|---|---|---|---|---|
| | | | | | | | 1 | 2 | 3 | 4 | 5 | 6 | 7 | 8 | 9 | 10 | 11 | 12 | 13 | 14 | 15 | 16 | 17 | 18 | 19 | 20 | 21 | 22 | 23 | 24 | 25 | 26 | 27 | 28 | 29 | 30 | 31 | 32 |
| 16 | SEQ | V | 0 | 0 | 0 | 0 | 0 | 1 | 2 | 3 | 4 | 5 | 6 | 7 | 8 | 9 | A | B | C | D | E | F | | | | | | | | | | | | | | | | |
| | | V | 1 | 0 | 0 | 0 | 8 | 9 | A | B | C | D | E | F | 0 | 1 | 2 | 3 | 4 | 5 | 6 | 7 | | | | | | | | | | | | | | | | |
| 32 | SEQ | 0 | 0 | 0 | 0 | 0 | 0 | 1 | 2 | 3 | 4 | 5 | 6 | 7 | 8 | 9 | A | B | C | D | E | F | 10 | 11 | 12 | 13 | 14 | 15 | 16 | 17 | 18 | 19 | 1A | 1B | 1C | 1D | 1E | 1F |
| | | 0 | 1 | 0 | 0 | 0 | 8 | 9 | A | B | C | D | E | F | 0 | 1 | 2 | 3 | 4 | 5 | 6 | 7 | 18 | 19 | 1A | 1B | 1C | 1D | 1E | 1F | 10 | 11 | 12 | 13 | 14 | 15 | 16 | 17 |
| | | 1 | 0 | 0 | 0 | 0 | 10 | 11 | 12 | 13 | 14 | 15 | 16 | 17 | 18 | 19 | 1A | 1B | 1C | 1D | 1E | 1F | 0 | 1 | 2 | 3 | 4 | 5 | 6 | 7 | 8 | 9 | A | B | C | D | E | F |
| | | 1 | 1 | 0 | 0 | 0 | 18 | 19 | 1A | 1B | 1C | 1D | 1E | 1F | 10 | 11 | 12 | 13 | 14 | 15 | 16 | 17 | 8 | 9 | A | B | C | D | E | F | 0 | 1 | 2 | 3 | 4 | 5 | 6 | 7 |

NOTE 1 B0-B2 are assumed to be '0', and are not transmitted on the command bus.
NOTE 2 The starting burst address is on 128-bit (8n) boundaries.

**Table 14 — Burst sequence for Write**

| Burst Length | Burst Type | C0/ B4 | B3 | B2 | B1 | B0 | Burst Cycle Number and Burst Address Sequence | | | | | | | | | | | | | | | | | | | | | | | | | | | | | | | | |
|---|---|---|---|---|---|---|---|---|---|---|---|---|---|---|---|---|---|---|---|---|---|---|---|---|---|---|---|---|---|---|---|---|---|---|---|---|---|---|---|
| | | | | | | | 1 | 2 | 3 | 4 | 5 | 6 | 7 | 8 | 9 | 10 | 11 | 12 | 13 | 14 | 15 | 16 | 17 | 18 | 19 | 20 | 21 | 22 | 23 | 24 | 25 | 26 | 27 | 28 | 29 | 30 | 31 | 32 |
| 16 | SEQ | V | 0 | 0 | 0 | 0 | 0 | 1 | 2 | 3 | 4 | 5 | 6 | 7 | 8 | 9 | A | B | C | D | E | F | | | | | | | | | | | | | | | | |
| 32 | SEQ | 0 | 0 | 0 | 0 | 0 | 0 | 1 | 2 | 3 | 4 | 5 | 6 | 7 | 8 | 9 | A | B | C | D | E | F | 10 | 11 | 12 | 13 | 14 | 15 | 16 | 17 | 18 | 19 | 1A | 1B | 1C | 1D | 1E | 1F |

NOTE 1 B0-B2 are assumed to be '0', and are not transmitted on the command bus.
NOTE 2 The starting burst address is on 256-bit (16n) boundaries for burst length 16 and 512-bit (32n) boundaries for Burst length 32.
NOTE 3 B3 shall be set to '0' for all Write operations.
NOTE 4 C0 shall be set to '0' for all Write operations in BL32 mode.

# 3 Clocking

LPDDR5 SDRAM's command and address interface operates from a differential clock (CK_t and CK_c). Commands and addresses are registered double data rate (DDR) at every rising edge of CK_t and CK_c. CS is sampled at the rising edge of CK_t and falling edge of CK_c. LPDDR5 uses a DDR data interface. The data interface uses two differential forwarded clocks (WCK_t/WCK_c) that are source synchronous to the DQs. DDR means that the data is registered at every rising edge of WCK_t and rising edge of WCK_c. WCK_t and WCK_c operate at twice or quadruple the frequency of the command/address clock (CK_t/CK_c). WCK_t/WCK_c is used to sample DQ data for write operation and to toggle DQ data for read operation. WCK_t/WCK_c is required to start toggling before starting write or read DQ data bursts. Any commands that require DQ data burst initiate a WCK2CK Sync sequence in LPDDR5 SDRAM. After WCK2CK Sync sequence, SDRAM internal WCK0 is aligned with CK to get ready for DQ data burst. This SDRAM internal WCK2CK Sync sequence is hidden from the memory controller, not requiring any extra commands. RDQS_t and RDQS_c are also generated from WCK clock.

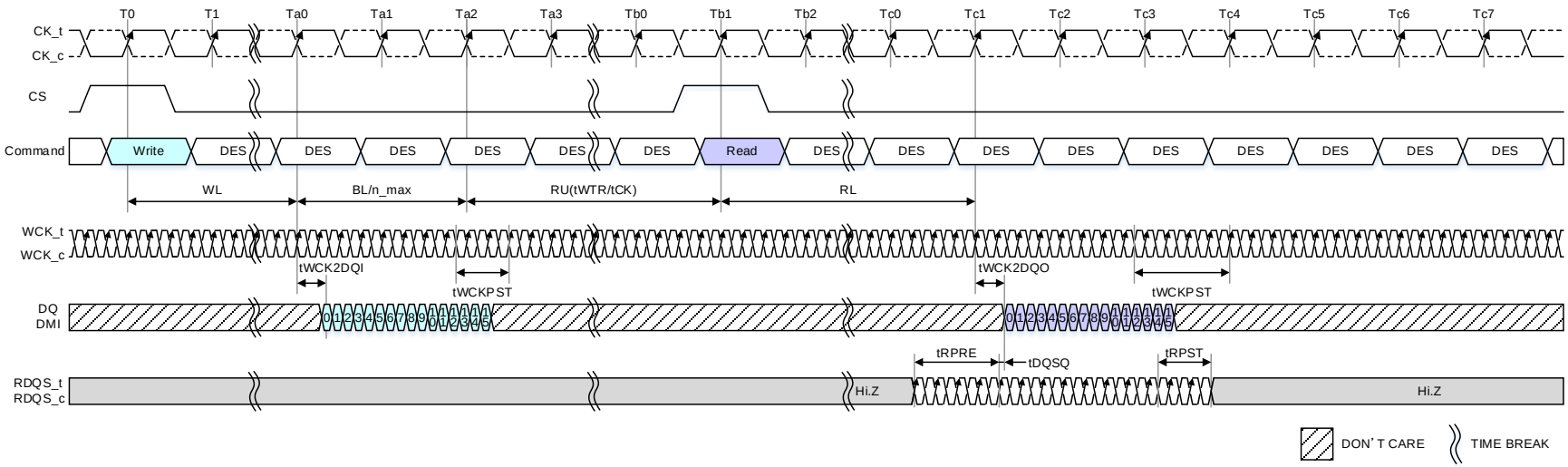


**Figure 9 - Clocking and Interface Relationship: Write to Read timing, 16B mode, CKR=4:1, BL=16, WCK Always On mode**

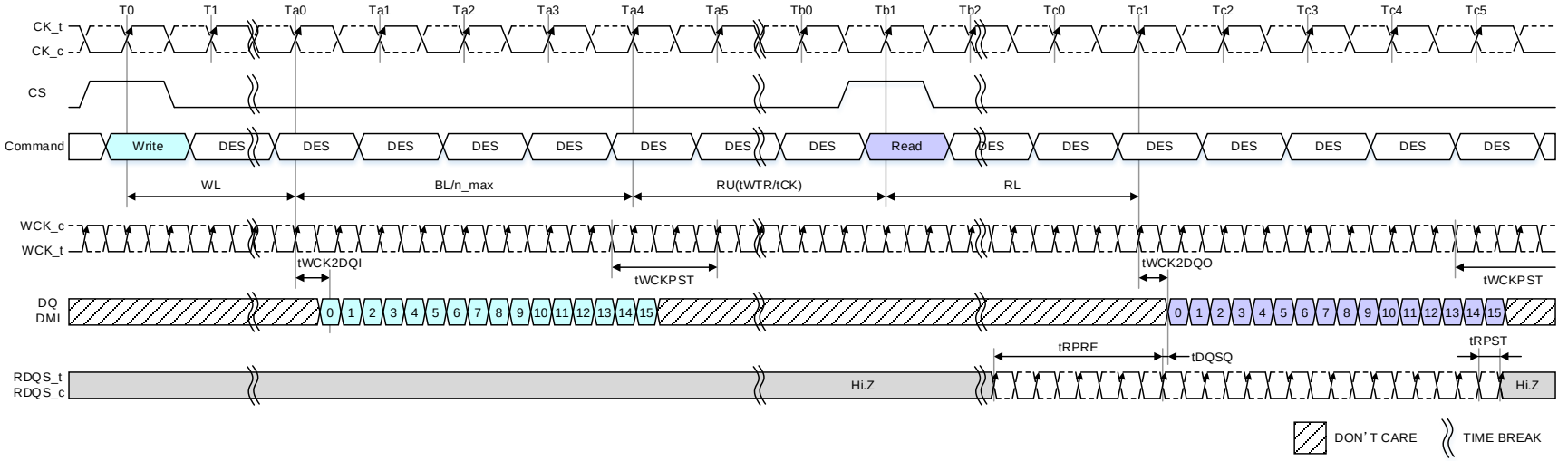


**Figure 10 - Clocking and Interface Relationship: Write to Read timing, 16B mode, CKR=2:1, BL=16, WCK Always On mode**

**Table 15 - Example Clock and Interface Signal Frequency Relationship**

| Pin | Speed | | Unit |
|---|---|---|---|
| | CKR=2:1 | CKR=4:1 | |
| CK_t, CK_c | 800 | 800 | MHz |
| Command/Address | 1600 | 1600 | Mbps/pin |
| WCK_t, WCK_c | 1600 | 3200 | MHz |
| DQ, DMI | 3200 | 6400 | Mbps/pin |

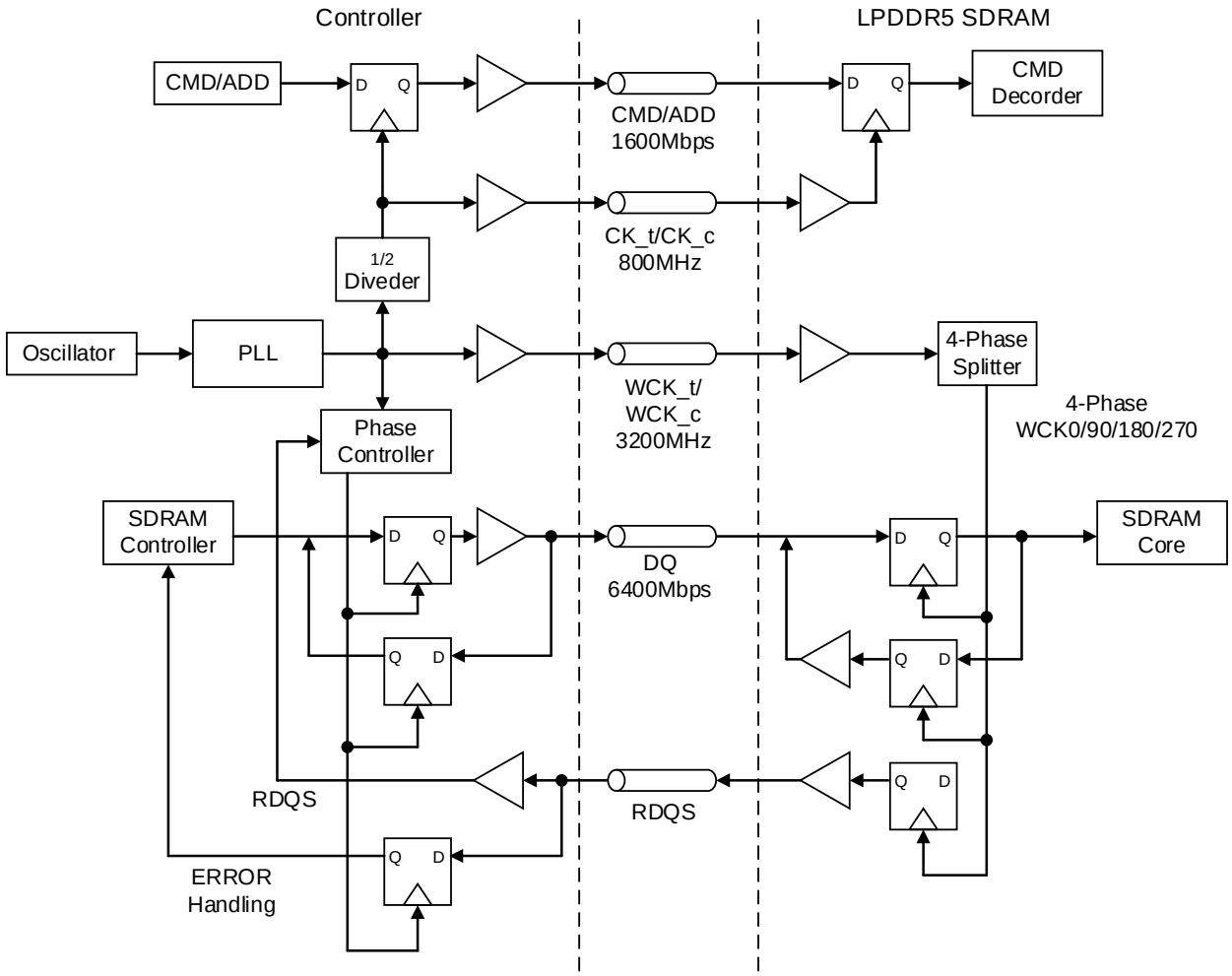


**Figure 11 - Block Diagram of an example system: CKR=4:1**

# 4 Initialization and Training

## 4.1 Power-up, Initialization and Power-off Procedure

For power-up and reset initialization, in order to prevent DRAM from functioning improperly, default values of the following MR settings are defined as Table 16.

**Table 16 — MRS Default setting**

| Item | MRS | Default Setting | Description |
|---|---|---|---|
| FSP-OP/WR | MR16 OP[3:0] | $0000_B$ | FSP-OP/WR[0] is enabled |
| WLS | MR3 OP[5] | $0_B$ | Write Latency Set A is selected |
| WL | MR1 OP[7:4] | $0000_B$ | WL = 4 |
| RL | MR2 OP[3:0] | $0000_B$ | RL = 6, nRBTP = 0 |
| nWR | MR2 OP[7:4] | $0000_B$ | nWR = 5 |
| DBI-WR/RD | MR3 OP[7:6] | $00_B$ | Write & Read DBI are disabled |
| CA ODT | MR11 OP[6:4] | $000_B$ | CA ODT is disabled |
| DQ ODT | MR11 OP[2:0] | $000_B$ | DQ ODT is disabled |
| Vref (CA) Value | MR12 OP[6:0] | $1010000_B$ | VREF(CA): 50.0% of VDDQ |
| Vref (DQ) Value | MR14 OP[6:0]<br>MR15 OP[6:0] | $1010000_B$<br>$1010000_B$ | VREF(DQ): 50.0% of VDDQ |
| Dual VDD2 | MR13 OP[7] | $0_B$ | Dual VDD2 rail (1.05V & 0.9V) used[1)] |
| CKR | MR18 OP[7] | $1_B$ | 2:1 ratio |
| ZQ Mode | MR28 OP[5] | $0_B$ | Background ZQ Calibration |
| NOTE 1 DRAM can be powered up in either dual rail or single rail mode with the default setting. MR13 OP[7] shall be set correctly prior to CBT. | | | |

### 4.1.1 Voltage Ramp and Device Initialization

The following sequence shall be used to power up the LPDDR5 SDRAM. Unless specified otherwise, these steps are mandatory.

1) While applying power (after Ta), RESET_n is recommended to be LOW (≤0.2 x VDD2H) and all other inputs shall be between VILmin and VIHmax. The SDRAM outputs remain at High-Z while RESET_n is held LOW. Power supply voltage ramp requirements are provided in
Table 17. VDD1 must ramp at the same time or earlier than VDD2H. VDD2H must ramp at the same time or earlier than VDD2L. VDD2L must ramp at the same time or earlier than VDDQ.

**Table 17 — Voltage Ramp Conditions**

| After | Applicable Conditions |
|---|---|
| Ta is reached | VDD1 must be greater than VDD2H |
| | VDD2H must be equal to or greater than VDD2L |
| | VDD2L must be greater than VDDQ-200mV |
| NOTE 1 Ta is the point when any power supply first reaches 300mV.<br>NOTE 2 Voltage ramp conditions in Table 17 apply between Ta and power-off (controlled or uncontrolled).<br>NOTE 3 Tb is the point at which all supply voltages are within their defined ranges. | |

NOTE 4 Power ramp duration tINIT0 (Tb-Ta) must not exceed 20ms.

### 4.1.1 Voltage Ramp and Device Initialization (Cont'd)

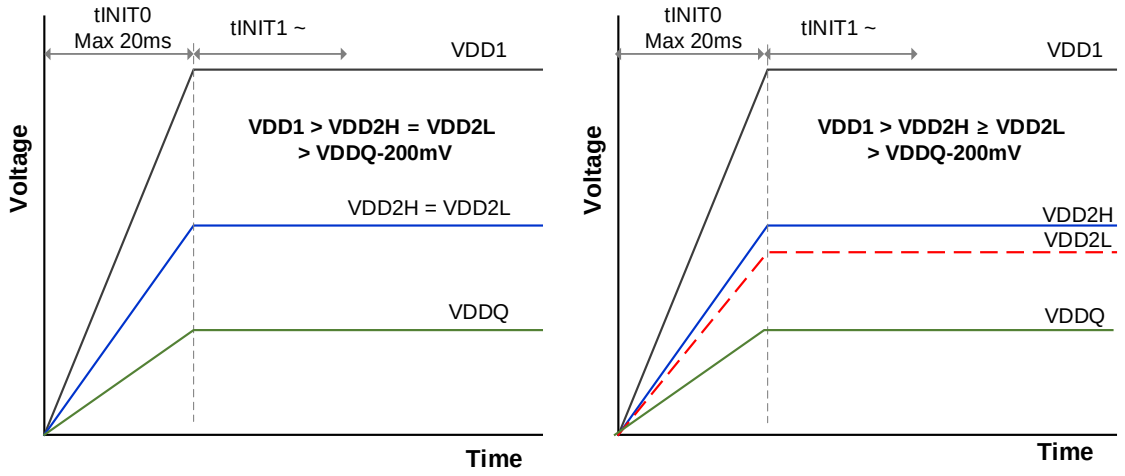


**Figure 12 — Requirement for Voltage Ramp Control**

2) Following the completion of the voltage ramp (Tb), RESET_n must be maintained LOW. DQ, DMI, WCK_t and WCK_c, RDQS_t, CK_t, CK_c and CA voltage levels must be between VSS and VDDQ during voltage ramp to avoid latch-up. CS level is required to be equal or less than ViLPD Max to prevent malfunction before a starting point of tINIT2.

3) Beginning at Tb, RESET_n must remain LOW for at least tINIT1(Tc), after which RESET_n can be de-asserted to HIGH(Tc).

### 4.1.1 Voltage Ramp and Device Initialization (Cont'd)

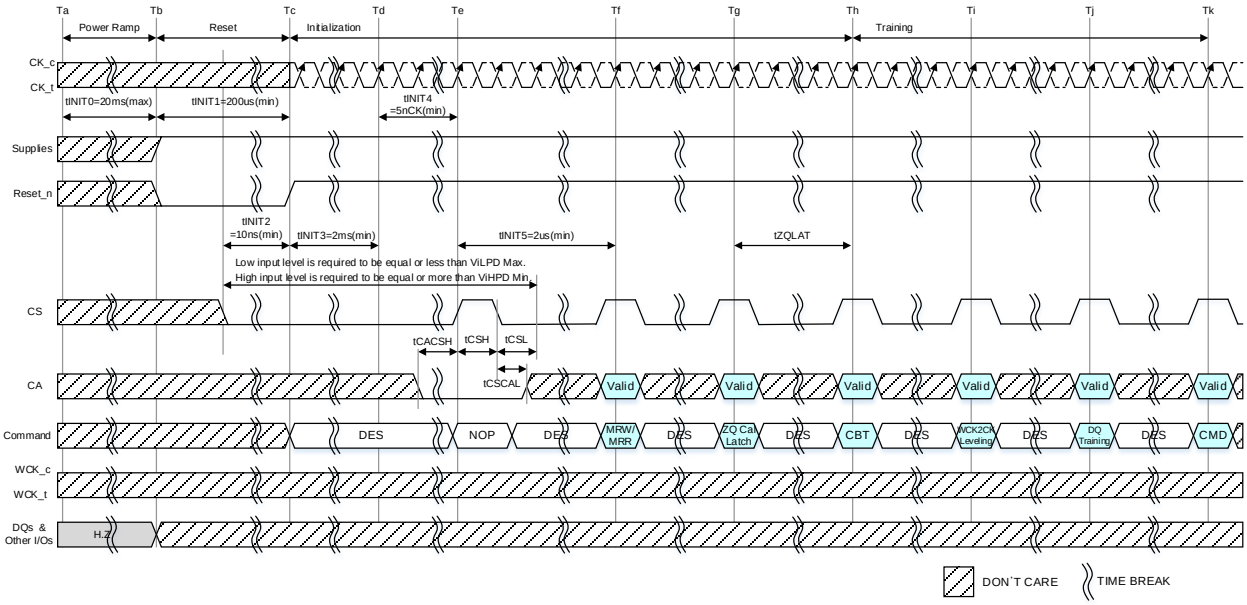


NOTE 1 Training is optional and may be done at the system architect's direction. The training sequence after ZQ_CAL latch in this figure (Th) is simplified recommendation and actual training sequence may vary depending on systems.

NOTE 2 Initial ZQ Calibration is started automatically by DRAM when RESET_n goes high after tINIT1 and is completed before Td.

NOTE 3 For the single VDD2 rail system, it is recommended to set MR13 OP[7] $1_B$ to switch VDD2 mode right after the time any MRW/MRR can be asserted(Tf) prior to CBT.

**Figure 13 — Power Ramp and Initialization Sequence**

4) Almost at the same time when RESET_n is de-asserted, CK_t and CK_c need to be toggle or valid to be complementary level.

5) CK_t and CK_c are required to be toggling (Td) and stabilized for tINIT4 before CS receives one toggling (Te).

6) After tINIT4, wait minimum of tINIT5 to issue any MRR or MRW commands (Tf). When issuing the first command (Tf), the clock frequency must be within the range defined for tCKb. Some AC parameters (for example, tWCKCK) could have relaxed timings (such as tWCKCKb) before the system is appropriately configured.

### 4.1.1 Voltage Ramp and Device Initialization (Cont'd)

7) Since LPDDR5 initial ZQ calibration is done automatically after ramp up, ZQ Latch command should be issued. After tZQLAT is satisfied (Th) the command bus (internal VREF(CA), CS, and CA) should be trained for high-speed operation by issuing MRW command (Command Bus Training Mode). This command is used to calibrate the SDRAM's internal VREF and align CS/CA with CK for high-speed operation. The LPDDR5 SDRAM will power-up with receivers configured for low-speed operations, and VREF(CA) set to a default factory setting. Normal SDRAM operation at clock speeds higher than tCKb may not be possible until command bus training has been completed.

   NOTE 1 The command bus training MRW command uses the CA bus as inputs for the calibration data stream, and outputs the results asynchronously on the DQ bus. See 4.2.2 for information on how to enter/exit the training mode.

8) After command bus training, DRAM controller must perform WCK2CK leveling. WCK2CK leveling mode is enabled when MR18-OP[6] is high (Ti). See 4.2.5.2 for detailed description of WCK2CK leveling entry and exit sequence. After finishing WCK2CK Leveling, tWCK2CK which means CK-to-WCK relationship is determined and WCK2CK-Sync. operation will be performed with the optimized margin.

9) After WCK2CK leveling, the DQ Bus (internal VREF(DQ), WCK, and DQ) should be trained for high-speed operation using the training commands (RD FIFO / WT FIFO / RD DQ Calibration) described in command truth table and by issuing MRW commands to adjust VREF(DQ)(Tj). The LPDDR5 SDRAM will power-up with receivers configured for low-speed operations and VREF(DQ) set to a default factory setting. Normal SDRAM operation at clock speeds higher than tCKb should not be attempted until DQ Bus training has been completed. The Read DQ Calibration command is used together with FIFO Write/Read commands to train DQ bus without disturbing the memory array contents. See 4.2.9 for detailed DQ Bus Training sequence.

10) At Tk, the LPDDR5 SDRAM is ready for normal operation, and is ready to accept any valid command. Any more registers that have not previously been set up for normal operation should be written at this time.

**Table 18 — Initialization Timing Parameters**

| Parameter | Value | | Unit | Comment |
|---|---|---|---|---|
| | Min | Max | | |
| tINIT0 | - | 20 | ms | Max voltage-ramp time at power-up |
| tINIT1 | 200 | | µs | Min Reset_n low time after completion of voltage ramp |
| tINIT2 | 10 | | ns | Min CS low time before RESET_n high |
| tINIT3 | 2 | | ms | Min CS low time after RESET_n high |
| tINIT4 | 5 | | tCK | Min stable clock before first CS high |
| tINIT5 | 2 | | µs | Min idle time before first MRW/MRR command |
| tZQLAT | Max(30ns, 4nCK) | | ns | ZQCAL latch quiet time |
| tCKb | Note 1,2 | Note 1,2 | ns | Clock cycle time during boot |

NOTE 1 Min tCKb guaranteed by DRAM test is 18ns.

NOTE 2 The system may boot at a higher frequency than dictated by min tCKb. The higher boot frequency is system dependent.

### 4.1.2 Reset Initialization with Stable Power

The following sequence is required for RESET at no power interruption initialization.

1) Assert RESET_n below 0.2 x VDD2H anytime when reset is needed. RESET_n needs to be maintained for minimum tPW_RESET. CS must be pulled LOW (≤VILPD) at least 10ns before de-asserting RESET_n.
2) Repeat steps 4 to 9 in 4.1.1, Voltage Ramp and Device Initialization.

**Table 19 — Reset Timing Parameter**

| Parameter | Value | | Unit | Comment |
|---|---|---|---|---|
| | Min | Max | | |
| tPW_RESET | 100 | | ns | Min RESET_n low time for Reset initialization with stable power |

### 4.1.3 Power-off Sequence

The following procedure is required to power off the SDRAM.

While powering off, CS must be held LOW (≤VILPD) and all other inputs must be between VILmin and VIHmax. The SDRAM outputs remain at High-Z while CS is held LOW. DQ, DMI, WCK_t and WCK_c, RDQS_t, CK_t, CK_c and CA voltage levels must be between VSS and VDDQ during voltage ramp to avoid latch-up. RESET_n input levels must be between VSS and VDD2H during voltage ramp to avoid latch-up.

Tx is the point where any power supply drops below the minimum value specified.

Tz is the point where all power supplies are below 300mV. After Tz, the SDRAM is powered off.

**Table 20 — Power Supply Conditions**

| Between | Applicable Conditions |
|---|---|
| Tx and Tz | VDD1 must be greater than VDD2H |
| | VDD2H must be equal to or greater than VDD2L |
| | VDD2L must be greater than VDDQ-200mV |

### 4.1.4 Uncontrolled Power-off Sequence

When an uncontrolled power-off occurs, the following conditions must be met:

At Tx, when the power supply drops below the minimum values specified, all power supplies must be turned off and all power supply current capacity must be at zero, except any static charge remaining in the system.

After Tz (the point at which all power supplies first reach 300mV), the SDRAM must power off. Between Tx and Tz the relative voltage between power supplies is uncontrolled. VDD1, VDD2H and VDD2L must decrease with a slope lower than 0.5V/µs between Tx and Tz.

An uncontrolled power-off sequence can occur a maximum of 400 times over the life of the SDRAM.

**Table 21 — Power Supply Conditions**

| Parameter | Value | | Unit | Comment |
|---|---|---|---|---|
| | Min | Max | | |
| tUNCTL_POFF | - | 2 | s | Maximum Power-Off ramp down time |

## 4.2 Training

### 4.2.1 ZQ Calibration

Two ZQ calibration modes are supported - Background Calibration or Command-Based Calibration. In Background Calibration mode, calibration of the output driver and CA/DQ ODT impedance across process, temperature, and voltage occurs in the background of device operation and is designed to eliminate any need for coordination among channels (that is, it allow for channel independence) within a single package. Systems may also select Command-Based Calibration mode, which operates in a fash-ion similar to LPDDR4 devices. Command-Based Calibration mode is selected by setting MR28 OP[5]=1B.

ZQ re-calibration may be required as the LPDDR5 SDRAM voltage and/or temperature changes due to changes in the system environment. ZQ calibration can only be performed when the VDDQ voltage is set to nominal 0.5v DC or above (i.e. when DVFSQ is not active). In Background Calibration mode, the calibration shall be halted by the memory controller setting ZQ Stop when VDDQ is set to a nominal DC level below 0.5v or when VDDQ is being slewed between levels (i.e. when DVFSQ is active). In Com-mand-Based mode, ZQCal Start commands are illegal when DVFSQ is active unless ZQ Stop is set. See section 4.2.1.2 "ZQ Stop Functionality" for more information.

Changing CA ODT values (MR11-OP[6:4]) and/or DQ ODT values (MR11-OP[2:0]) will not alter the exist-ing recalibration scheme, therefore there is no need for immediate recalibration.

#### 4.2.1.1 Calibration During Powerup and Initialization

ZQ calibration is automatically performed by all LPDDR5 die during the initialization/powerup sequence before Td shown in Figure 13 in the Power-up, Initialization, and Power-off Procedure section of this standard. A ZQCal Latch command shall be issued to all LPDDR5 die on or after Tg regardless of the state of ZQUF. ZQ Calibration mode selection may be changed anytime after Tf. For more details about changing ZQ Calibration modes see section 4.2.1.1.7.

NOTE 1 See Table 22, ZQCal Timing Parameters for calibration latency and timing.
NOTE 2 Asserting ZQ Reset will set the calibration values to their default setting.
NOTE 3 When ZQ Stop is enabled, the ZQ resource is available for use by other devices. See section 4.2.1.2 ZQ Stop Functionality.
NOTE 4 In Command-Based Calibration mode ZQCal Start commands are ignored when MR28 OP[1]=$1_B$.
NOTE 5 ZQ Interval and ZQ Mode MR settings are only applicable to ZQ Master die. These settings will be ignored by ZQ Slave die.
NOTE 6 After the power up initialization and reset sequences have been completed, ZQUF MR4 OP[5]=$0_B$.
NOTE 7 In command-based calibration mode, ZQCal Start commands only need to be issued to the ZQ Mas-ter die or dice to maintain accurate calibration. ZQCal Start commands received by non-ZQ Master die will be ignored. All die which share ZQ resources with a ZQ Master die that receives a valid ZQCal Start command will be calibrated. ZQCal Latch commands may be issued to each of these die after tZQCAL4, tZQCAL8 or tZQCAL16 has been met.
NOTE 8 LPDDR5 packages with more than one ZQ pin may include more than one ZQ Master die.

#### 4.2.1.1.1 Background Calibration

In this mode pull-down/ODT and pull-up/Voh calibration will be performed in the background and kept up-to-date by the DRAM. Re-calibration will be performed by the LPDDR5 SDRAM within the time inter-val, tZQINT, specified in MR28 OP[3:2]. No ZQCal Start commands are required, and any ZQCal Start commands received by the DRAM will be ignored.

Pull-down/ODT calibration is controlled by each DRAM die using an external ZQ resistor connected between VDDQ and a package ball or pin (ZQ resources). These ZQ resources may be shared among a number of DRAM die up to a maximum of NZQ. Calibration will be automatically performed as part of power-up/initialization and after RESET_n assertion. Subsequent re-calibration will be kept up-to-date by the DRAM. Self arbitration by the DRAM insures that up to NZQ die within a package can share a common external ZQ resistor and avoid conflicts. Noise immunity will not be compromised when sharing the external ZQ calibration resistor.

When automatic pull-down/ODT calibration is complete, pull-up/Voh calibration will start automatically. At the completion of pull-down/ODT and pull-up/Voh calibration, MR4 OP[5] bit (ZQUF) will be set if the new calibration codes do not match the currently latched codes. An MRR of this bit will notify the system that new calibration results are available and that a ZQCal Latch command (following ZQCal Latch timing constraints) should be issued to ensure accurate calibration of Pull-down, ODT and Voh is consistently maintained. Setting of ZQUF is unique to each die regardless of configuration or sharing of the ZQ pin or pins. Alternatively the memory controller may choose not to monitor ZQUF and periodically issue ZQCal Latch commands.

Setting the MR28 OP[1]=ZQ Stop will halt all background calibration activity. Re-setting MR28 OP[1] to zero will immediately start a calibration sequence, where all DRAM die sharing the ZQ resource will re-calibrate in a serial fashion. This enables rapid recalibration when exiting from DVFSQ-active mode where recalibration was not possible.

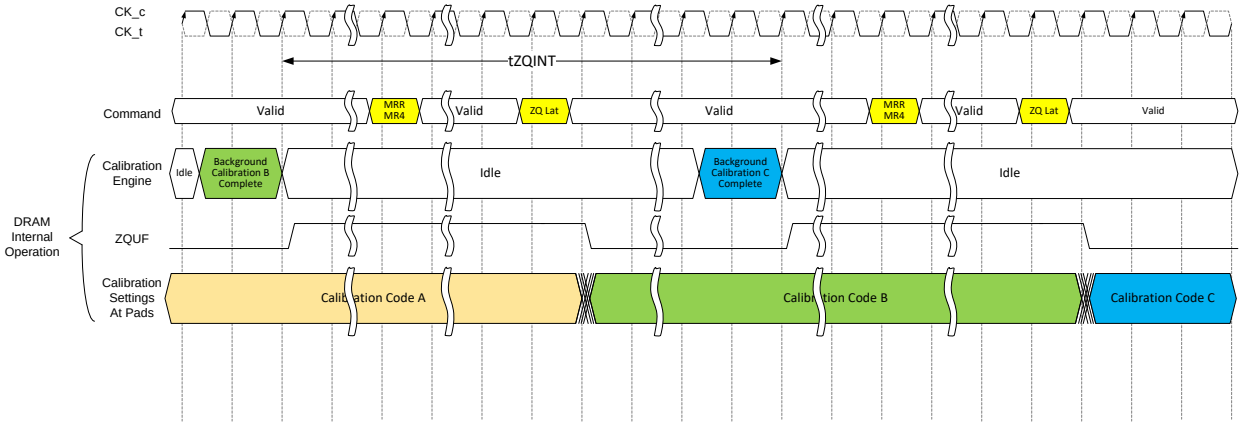


**Figure 14 - Background ZQ Calibration Timing**

#### 4.2.1.1.2 Latching ZQ Calibration Results in Background Calibration Mode

Latching ZQ calibration results is accomplished with the MPC ZQCal Latch command. This command loads new calibration results into the pull-down/ODT devices and pull-up drivers.
A ZQCal Latch command may be issued anytime outside of power-down when there are no DQ operations pending or in progress. The results from the most-recently completed calibration will always be latched with each ZQCal Latch command. If CA ODT is enabled, the CA bus shall maintain a deselect state during tZQLAT to allow CA ODT calibration settings to be updated. In any case operations that initiate DQ operations are always dis-allowed during tZQLAT.
The DQ and CA ODT calibration values will not be updated until ZQCal Latch command is performed and tZQLAT has been met, with the following exceptions:

- ZQ calibration will automatically occur for each LPDDR5 die on power up/initialization and after Reset_n pin assertion. A ZQCal Latch command shall be issued to all LPDDR5 die on or after Tg.

When a ZQCal Latch command is executed the ZQUF bit will be reset to 0 before expiration of tZQLAT.

#### 4.2.1.1.3 Command-Based Calibration

When Command-based calibration mode is selected, a ZQCal Start command may be periodically issued to the ZQ master die or dice in each DRAM package to maintain accurate calibration. ZQCal Start commands may only be issued when DVFSQ is not active. The memory controller may read MR4 OP[6] to determine which DRAM die in a package is designated as ZQ Master. The designation of ZQ Master is hard-coded by the DRAM vendor. ZQCal Start commands issued to DRAM die that are not designated ZQ Master will be ignored. When the ZQ master die is placed in powerdown or deep sleep mode, ZQCal Start commands will be ignored and re-calibration will not occur for all die sharing the ZQ resources. All die will be re-calibrated only when the ZQ master die exits powerdown or deep sleep mode and receives a subsequent ZQCal Start command.
When the ZQ Master die remains in an active mode and receives a valid ZQCal Start command, any slave die sharing ZQ resources that are in powerdown or deep sleep mode will also recalibrate normally. Systems where DRAM die sharing ZQ resources can operate in a mixed fashion (some die operating, some in powerdown or deep sleep mode) should note the ZQ master die designation when determining configuration if re-calibration will be required in mixed mode.

#### 4.2.1.1.4 Latching ZQ Calibration Results in Command-Based Calibration Mode

In Command-based calibration mode, following a ZQCal Start command a ZQCal Latch command should be issued to each die after tZQCAL4, tZQCAL8 or tZQCAL16 has been met. tZQCAL4 applies to LPDDR5 DRAM die where the ZQ resource is shared among four or fewer DRAM die. tZQCAL8 applies to LPDDR5 DRAM die where the ZQ resource is shared among four and up to eight DRAM die. tZQCAL16 applies to LPDDR5 DRAM die where the ZQ resource is shared among more than eight DRAM die, up to the maximum of sixteen (NZQ). The ZQCal Latch command will load the most recent calibration results to the LPDDR5 output driver and ODT devices. In cases where the correct tZQCAL4, tZQCAL8, or tZQCAL16 delay time is not met, the LPDDR5 DRAM may latch a previous valid calibration result but in no case shall latch an invalid result. As in background calibration mode, a ZQCal Latch command may be issued anytime outside of power-down when there are no DQ operations pending or in progress. The value of ZQUF is undefined when Command-Based Calibration mode has been selected.

If CA ODT is enabled, the CA bus shall maintain a deselect state during tZQLAT to allow CA ODT calibration settings to be updated. In any case operations that initiate DQ operations are always dis-allowed during tZQLAT.

The DQ and CA ODT calibration values will not be updated until ZQCal Latch is performed and tZQLAT has been met, with the following exceptions:

- ZQ calibration will automatically occur for each LPDDR5 die on power up/initialization and after Reset_n pin assertion. A ZQCal Latch command shall be issued to all LPDDR5 die on or after Tg.

#### 4.2.1.1.5 Maintaining Accurate Calibration - Background Calibration Mode

To maintain Pull-down/ODT calibration and Voh calibration when DVFSQ is not active:

1. Periodically, based on tZQINT, issue an MRR to MR4 to check the ZQUF OP[5] bit status for each LPDDR5 die.
2. If MR4 OP[5]=1, issue a ZQCal Latch command.

Repeat 1-2 as needed. Alternatively the memory controller may choose not to monitor ZQUF and periodically issue ZQCal Latch commands. In this case the most-recently-completed calibration results will always be latched, and will be no older than tZQINT.

It may be permissible for the memory controller to ignore ZQUF and not issue ZQCal Latch commands if both of the following are true:

- CA ODT is disabled
- The LPDDR5 SDRAM is in an idle state, or in Self Refresh or Power Down mode

Re-calibration will still occur in the background to ensure accurate driver/ODT settings are available should they be needed. In this case the memory controller should ensure a ZQCal Latch command is performed prior to resuming data traffic if ZQUF is set.

When DVFSQ is active MR28 OP[1] ZQ Stop shall be set for each LPDDR5 die to ensure recalibrations are inhibited. When DVFSQ is no longer active ZQ Stop may be de-asserted, which will immediately begin a recalibration and enable subsequent periodic background calibrations. When the memory con-troller de-asserts ZQ Stop it shall reset MR28 OP[1] to zero for all die sharing the ZQ resource within 100ns as described in 4.2.1.2.2. The ZQUF will be updated and results from the recalibration can be latched after the appropriate tZQCAL time (tZQCAL4, tZQCAL8 or tZQCAL16) has been satisfied.

#### 4.2.1.1.6 Maintaining Accurate Calibration - Command-Based Calibration Mode

To maintain Pull-down/ODT calibration and Voh calibration when DVFSQ is not active:

1. Periodically, as system conditions warrant, issue a ZQCal Start command to the ZQ Master die.
2. After expiration of the appropriate tZQCAL time (tZQCAL4, tZQCAL8 or tZQCAL16), issue a ZQCal Latch command to each die.

Repeat 1-2 as needed.

When DVFSQ is active no recalibration may be performed.

#### 4.2.1.1.7 Changing between Calibration Modes

Changing between calibration modes may be performed anytime after powerup and initialization time Tf when the device is not in power-down or deep sleep mode.

##### 4.2.1.1.7.1 Changing between Calibration Modes when DVFSQ is not active

To change from Background Calibration Mode to Command-Based Calibration mode for all die sharing a ZQ resource when DVFSQ is not active:

1. Write the ZQ Master die MR28 OP[5] = 1B. MR28 OP[5] may also be updated on ZQ Slave die but it is not required as this bit is ignored by the LPDDR5 ZQ Slave die.
2. Wait tZQCALx
3. Begin to issue ZQCal Start commands to the ZQ Master die and subsequent ZQ Latch commands to all die to begin periodic command-based calibration as described in section 4.2.1.1.6.

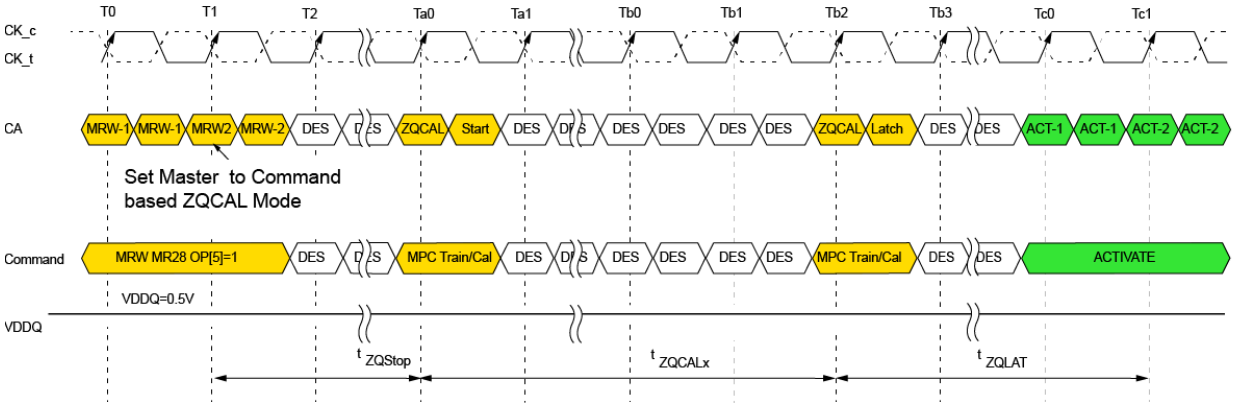


**Figure 15 - Background to Command-based Switching when DVFSQ is not active**

To change from Command-Based Calibration mode to Background Calibration mode for all die sharing a ZQ resource when DVFSQ is not active:

1. Ensure tZQCALx has been met from any previous ZQCal Start command.
2. Write the ZQ Master die MR28 OP[5] = 0B. MR28 OP[5] may also be set to 0B on ZQ Slave die if desired.
3. Issue ZQCal Latch commands as described in Section 4.2.1.1.5.

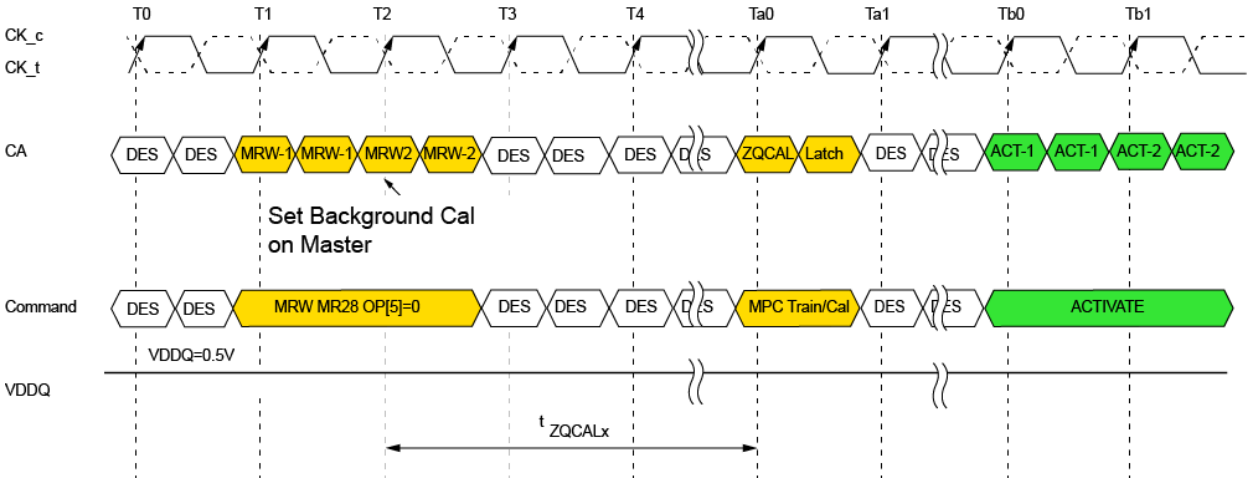


**Figure 16 - Command=based to Background Switching when DVFSQ is not active**

#### 4.2.1.1.7.2 Changing between Calibration Modes when DVFSQ is active

To change from Background Calibration Mode to Command-Based Calibration mode for all die sharing a ZQ resource when DVFSQ is active:

1. Write the ZQ Master die MR28 OP[5] = $1_B$. MR28 may also be updated on ZQ Slave die but it is not required as this bit is ignored by the LPDDR5 ZQ Slave die.
2. MR28 OP[1] ZQ Stop shall be written to $0_B$ for all die sharing the ZQ resource. This may occur simultaneously with the write to MR28 OP[5], or at any time at least tZQSTOP before a ZQCal Start command may be issued to the ZQ Master die (when DVFSQ is no longer active).

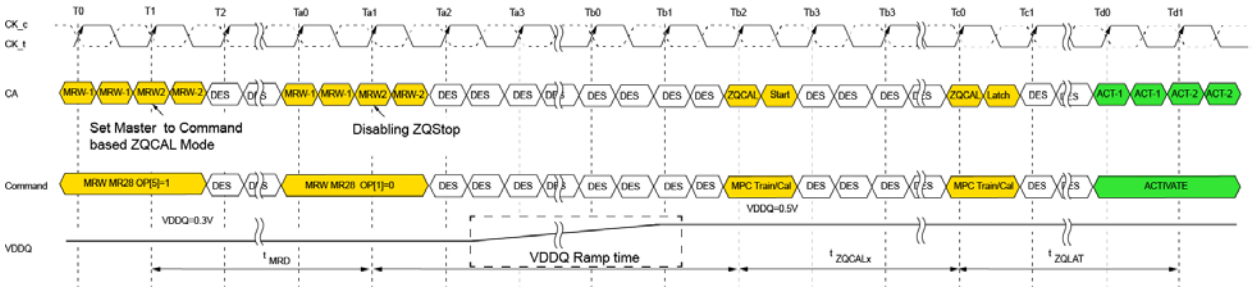


**Figure 17 - Background to Command-based Switching when DVFSQ is active**

To change from Command-Based Calibration mode to Background Calibration mode for all die sharing a ZQ resource when DVFSQ is active:

1. Write all ZQ Slave die MR28 OP[1] = $1_B$.
2. Write the ZQ Master die MR28 OP[5] = $0_B$ and MR28 OP[1] = $1_B$. These writes should occur simultaneously - if not simultaneously MR28 OP[1] shall be written first.
3. After DVFSQ is no longer active MR28 OP[1] shall be written to $0_B$ for all die sharing the ZQ resource.

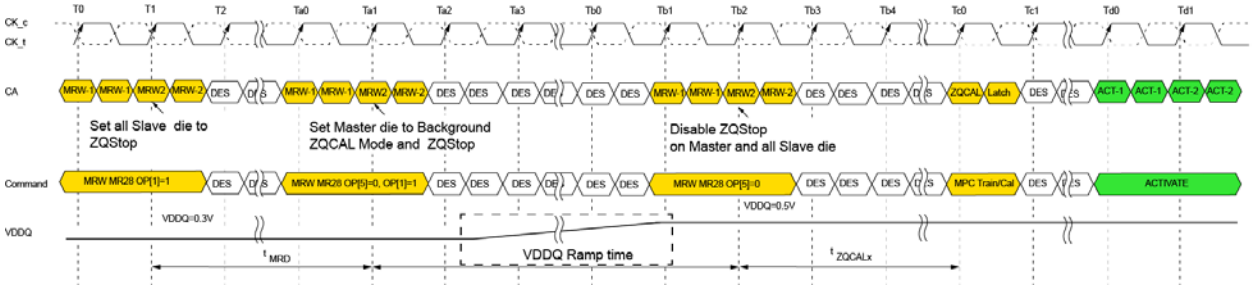


**Figure 18 - Command=based to Background Switching when DVFSQ is active**

#### 4.2.1.2 ZQ Stop Functionality

#### 4.2.1.2.1 ZQ Resistor Sharing by Other Device(s)

##### 4.2.1.2.1.1 ZQ Resistor Sharing in Background Calibration Mode

In Background Calibration mode, a ZQ Stop function is provided to enable another device or devices to share the ZQ resistor. This function is enabled by MR28 OP[1]=ZQ Stop. When another device needs use of the ZQ resistor, MR28 OP[1] shall be set to 1 for all LPDDR5 devices that share ZQ resources. This will halt background calibration operations within delay time tZQSTOP (see Table 22) for each LPDDR5 device. Once tZQSTOP has expired for all LPDDR5 devices that share the ZQ resource another device may use the resource. When the ZQ resource is no longer needed by the other device or devices the ZQ Stop MR bit should be reset to 0 to allow background calibrations to continue normally. When the ZQ Stop MR bit is reset to 0 periodic background calibrations will be re-started.

Since ZQ Stop inhibits the LPDDR5 devices from recalibrating, note that changing system conditions while the ZQ Stop MR bit is set may cause the LPDDR5 ZQ calibration accuracy to deviate from specification. To ensure continued accurate calibration as discussed in sections 4.2.1.1.5 and 4.2.1.1.6 the ZQ Stop MR bit shall not be set for longer than tZQINT when set to background calibration mode, or the normal application-specific ZQCal Start command interval when set to command-based calibration mode.

##### 4.2.1.2.1.2 ZQ Resistor Sharing in Command-Based Calibration Mode

In command-based calibration mode, ZQCal Start commands shall not be issued to the ZQ master die while the ZQ resistor is being used by any other device unless the ZQ Stop is set. The memory control-ler shall ensure tZQCAL4, tZQCAL8 or tZQCAL16 from the most-recent ZQCal Start command has been met before allowing any device to use the ZQ resistor unless the ZQ Stop bit is set. The LPDDR5 device will ignore ZQCal Start commands received when MR28 OP[1] ZQ Stop is set to $1_B$.

#### 4.2.1.2.2 Stopping Background Calibration when DVFSQ is active

In Background Calibration mode, the calibration shall be halted by setting ZQ Stop before DVFSQ is entered. ZQ Stop may be reset to 0 when DVFSQ is no longer active (when VDDQ is returned to a 0.5v nominal level). Resetting of ZQ Stop will start background calibration(s) immediately. After expiration of the appropriate tZQCAL time (tZQCAL4, tZQCAL8 or tZQCAL16) from resetting of ZQ Stop on the ZQ Master die, the memory controller may check the ZQUF flags, or may issue a ZQCal Latch command to all die sharing the ZQ resource. To guarantee recalibration of all die sharing the ZQ resource within tZQCAL, the MR28 OP[1] ZQ Stop bit shall be reset for all slave die sharing the ZQ resource either be-fore, or no later than 100ns after, the MR28 OP[1] ZQ Stop bit is reset on the ZQ master die.

#### 4.2.1.2.3 Stopping Background Calibration when VDDQ is Powered Off

In Background Calibration mode, before entering Power-down mode, the calibration shall be halted by setting ZQ Stop when VDDQ is going to be powered off. When Power-down mode is exited ZQ Stop should be reset to 0 to re-enable background calibration. Resetting of ZQ Stop on the ZQ Master die will start background calibration(s) immediately. After expiration of the appropriate tZQCAL time (tZQCAL4, tZQCAL8 or tZQCAL16) from resetting of ZQ Stop, the memory controller may check the ZQUF flags, or may issue a ZQCal Latch command to each die sharing the ZQ resource. To guarantee recalibration of all die sharing the ZQ resource within tZQCAL, the MR28 OP[1] ZQ Stop bit shall be reset for all slave die sharing the ZQ resource either before, or no later than 100ns after, the MR28 OP[1] ZQ Stop bit is reset on the ZQ master die.

**Table 22 - ZQ Calibration Timing Parameters**

| Parameter | Symbol | Min/Max | Value | Units |
|---|---|---|---|---|
| ZQ Calibration Command to Latch Time, NZQ≤4 | tZQCAL4 | Min | 1.5 | us |
| ZQ Calibration Command to Latch Time, 4<NZQ≤8 | tZQCAL8 | Min | 3 | us |
| ZQ Calibration Command to Latch Time, NZQ 8<NZQ≤16 | tZQCAL16 | Min | 6 | us |
| ZQ Calibration Latch Time | tZQLAT | Min | MAX(30ns,4nCK) | ns |
| ZQ Calibration Reset Time | tZQRESET | Min | MAX(50ns,3nCK) | ns |
| Delay Time from ZQ Stop Bit Set to ZQ Resistor Available | tZQSTOP | Max | 30 | ns |
| Background Calibration Interval | tZQINT | Max | Programmable, 32, 64, 128, or 256 | ms |
| Maximum Number of LPDDR5 Devices (die) Connected to a Single ZQ Resistor | NZQ | Max | 16 | Die |
| Maximum Capacitive Load on ZQ Network | CZQ | Max | TBD | pF |

#### 4.2.1.3 ZQ Reset

Setting the ZQ Reset MR bit resets the output impedance calibration to a default accuracy of ±30% across process, voltage, and temperature. The ZQ Reset command is executed by writing MR28-OP[0] = 1b. The ZQ Reset command will also reset the ZQ Stop MR28 OP[1] and ZQUF MR4 OP[5] bits to 0. ZQ Reset will not change the state of the ZQ Mode or ZQ Interval MR bits MR28 OP[5] or OP[3:2]. If CA ODT is enabled, the CA bus shall maintain a deselect state during tZQRESET to allow CA ODT calibration settings to be updated. In any case operations that initiate DQ operations are always dis-allowed during tZQRESET. The ZQ Reset MR bit shall be reset to 0b by the DRAM after tZQRESET. To reset the ODT and output impedance in a multi-die package the ZQ Reset function shall be issued to all die regardless of ZQ Master or ZQ Slave designation.

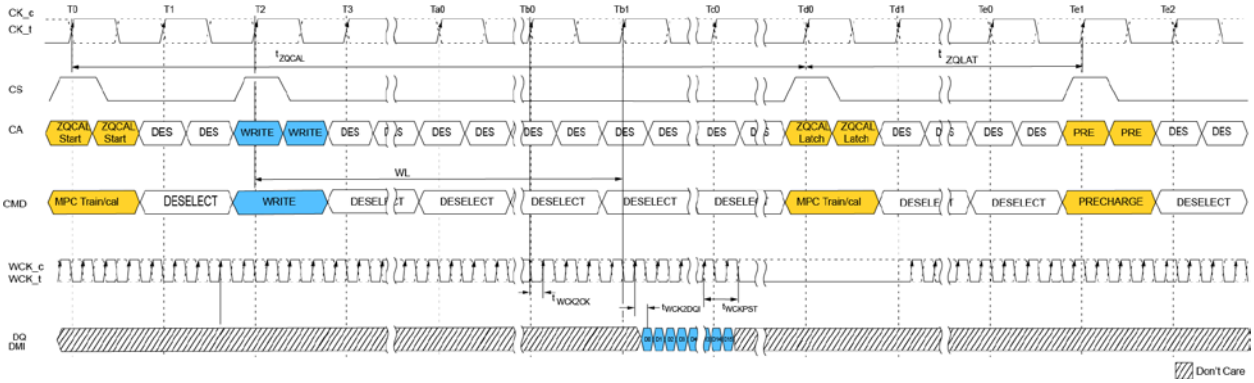


**Figure 19 - ZQCal Timing**

NOTE 1 WRITE and PRECHARGE operations are shown for illustrative purposes. Any single or multiple valid commands may be executed within the tZQCAL time and prior to latching the results.

NOTE 2 Before the ZQCal Latch command can be executed, any prior commands that utilize the DQ bus shall have completed.
WRITE commands with DQ termination shall be given enough time to turn off the DQ ODT before issu-ing the ZQCal Latch command. See the ODT section for ODT timing.

#### 4.2.1.4 Multi-die Package Considerations

Up to NZQ LPDDR5 devices within a single package may connect to the same ZQ resistor. ZQCal Start commands (when in command-based calibration mode) are required for the master die and may be issued to other memory die sharing a ZQ resource asynchronously or simultaneously. ZQCal Start commands to non-master die are ignored. ZQCal Latch commands, when required, are necessary for each die. When multiple die share a ZQ resource and a ZQ master die is managing calibration (when DVFSQ is inactive, either in background mode or by accepting ZQCal Start commands), the MR28 OP[1] ZQ Stop bit shall be set to 0B for all ZQ slave die sharing the ZQ resource. No other arbitration considerations are required.

#### 4.2.1.4.1 Other Considerations in Background Calibration Mode

Each LPDDR5 die includes a single ZQ pin and associated ZQ calibration circuitry. Calibration values from this circuit will be generated and used according to the following protocol:

- Setting of the ZQ Stop bit always has priority over background calibration processes
- If the ZQ Stop MR bit is set to 1 while a background ZQ calibration is in progress, the background calibration will be interrupted
- A background calibration will start immediately when the ZQ Stop MR bit is reset to 0
- A background calibration will not start while the ZQ Stop MR bit is set to 1
- The ZQUF bit will not be reset by setting of the ZQ Stop bit to 1
- The ZQUF bit will be reset only by a ZQCal Latch command or ZQ Reset
- The ZQUF bit will be set if calibration codes do not match the currently latched codes even when the device is in Self-refresh or Power-down mode, providing ZQ Stop is not set

#### 4.2.1.4.2 Other Considerations in Command-Based Calibration Mode

Packages include one or more ZQ pin(s) and associated ZQ calibration circuitry. Calibration values from this circuit or circuits will be generated and used according to the following protocol:

- ZQCal Latch commands that do not meet the corresponding tZQCAL4, tZQCAL8 or tZQCAL16 may latch the results of the previous most recently completed ZQ calibration

### 4.2.1.5 ZQ External Resistor, Tolerance, and Capacitive Loading

To use the ZQ calibration function, a 240 ohm, ±1% tolerance external resistor shall be connected between the ZQ pin and VDDQ.
The total capacitive loading on the ZQ pin shall be limited to CZQ.

### 4.2.1.6 Flow Chart Examples

These example flow charts are representative only of one set of LPDDR5 die that share a single ZQ resource. These are examples only, there may be other valid methods of operation.

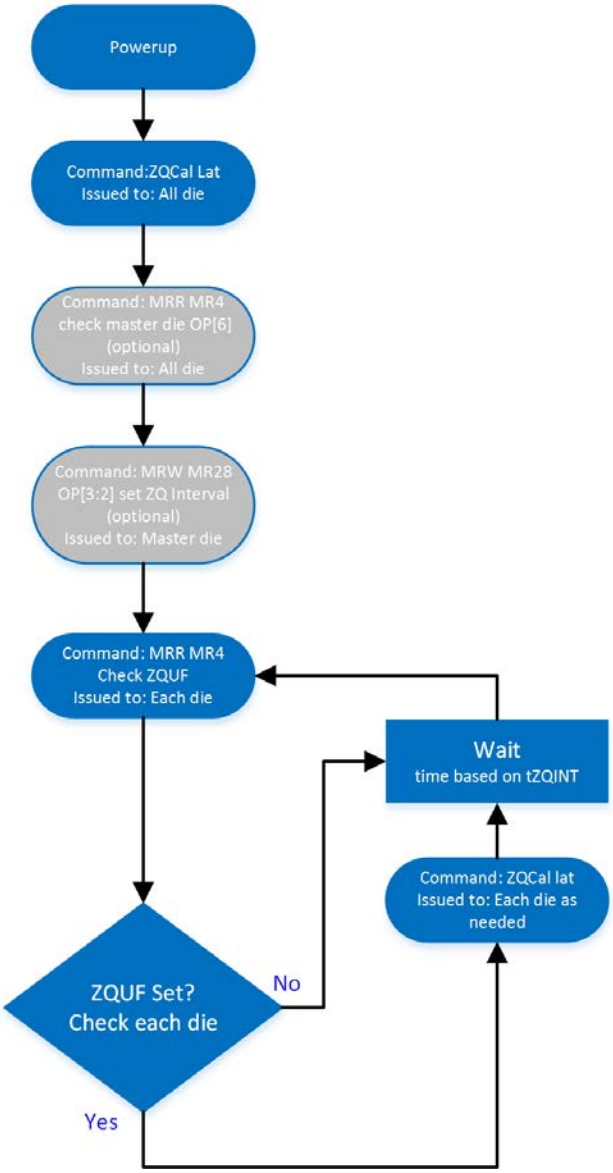


**Figure 20 - Initialization to Background Calibration Flow Chart, no DVFSQ support**

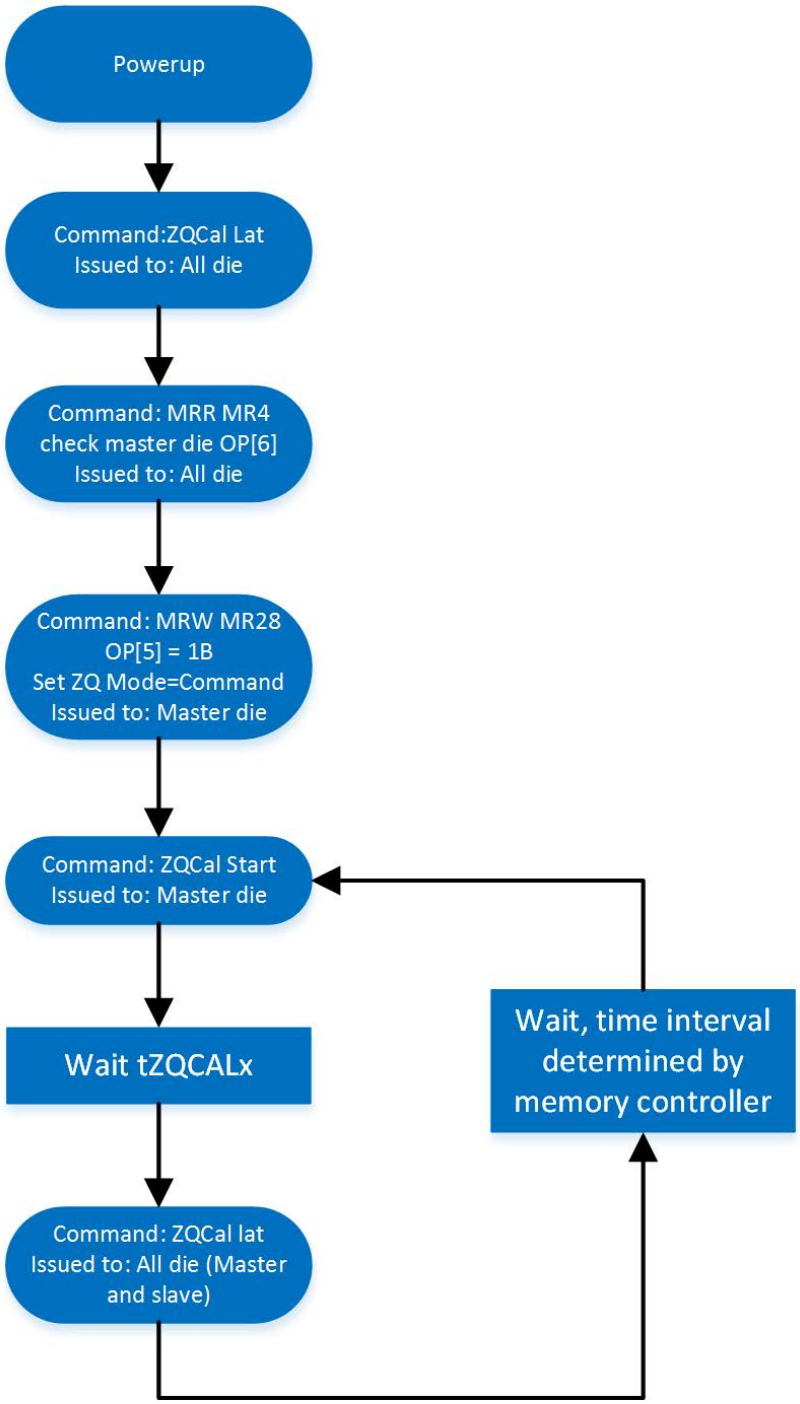


**Figure 21 - Initialization to Command-based Calibration Flow Chart, no DVFSQ support, option 1 (check Master)**

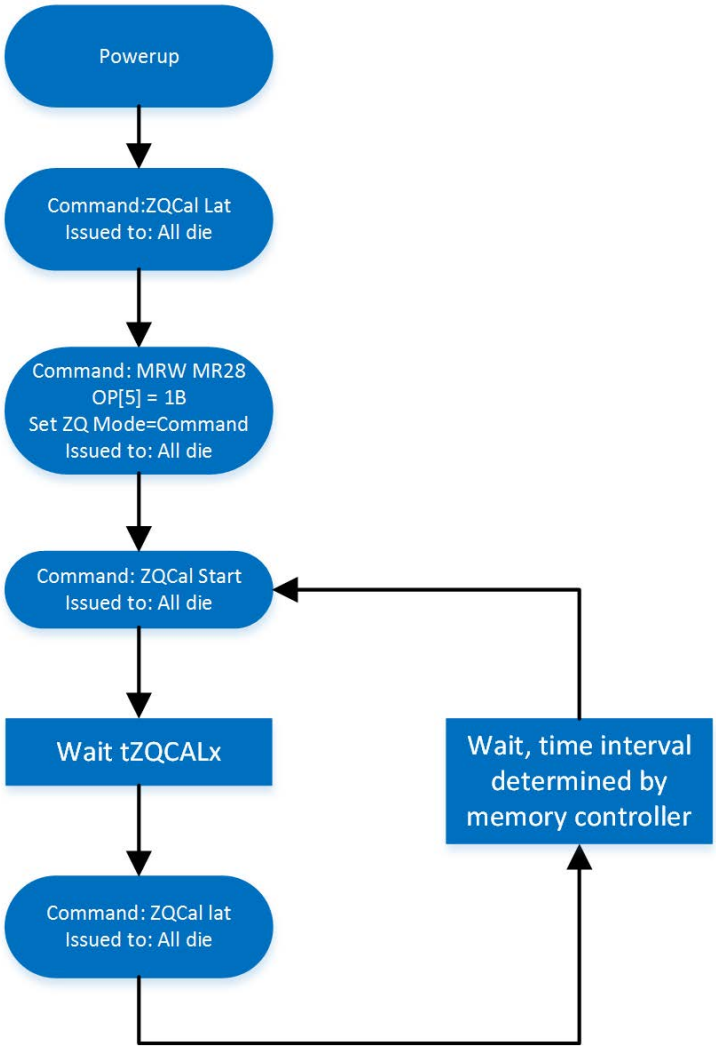


**Figure 22 - Initialization to Command-based Calibration Flow Chart, no DVFSQ support, option 2 (ignore Master)**

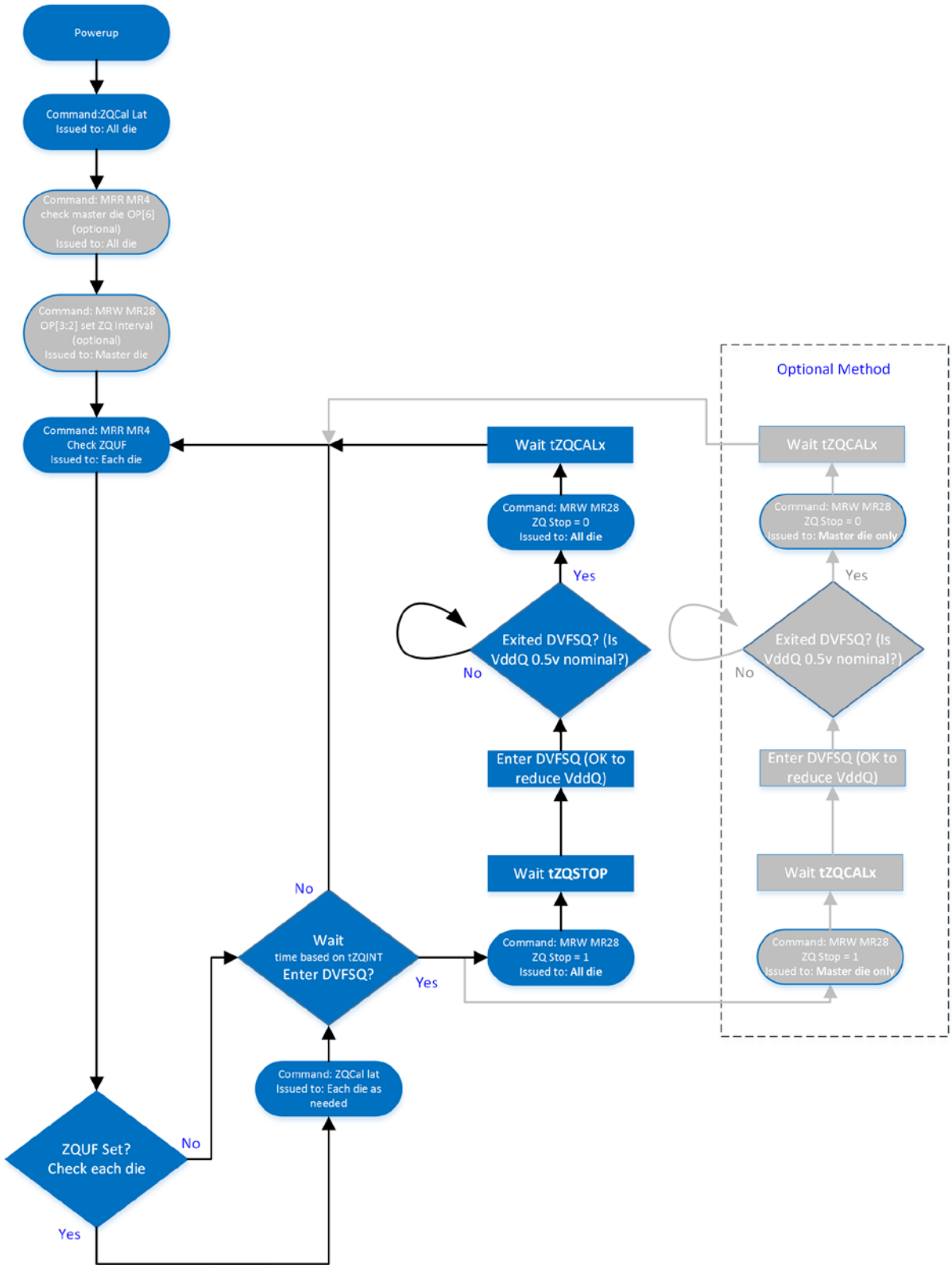


**Figure 23 - Initialization to Background Calibration Flow Chart, with DVFSQ support**

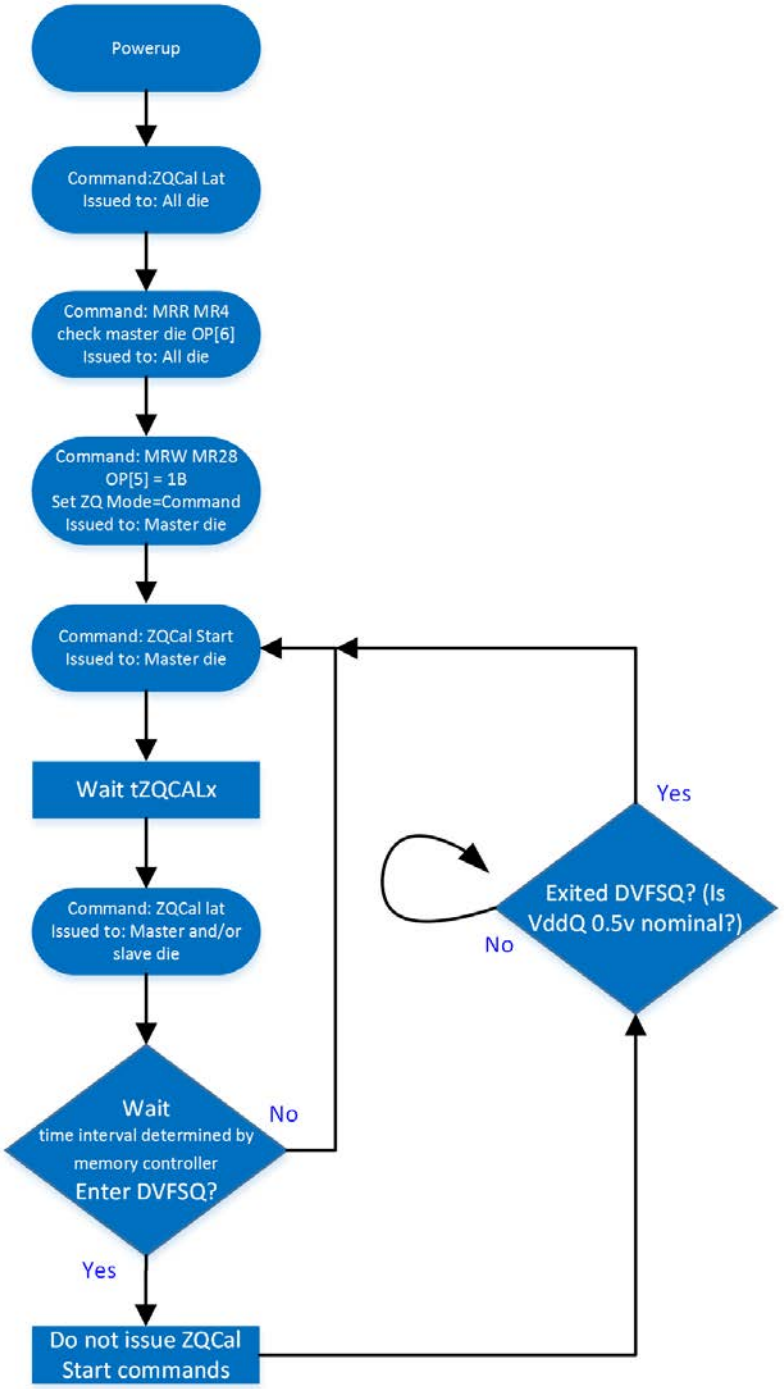


**Figure 24 - Initialization to Command-based Calibration Flow Chart, with DVFSQ support**

### 4.2.1 Command Bus Training

The LPDDR5 SDRAM command bus must be trained before enabling termination for high-frequency or mid-frequency operation. LPDDR5 SDRAM provides an internal VREF(CA) that default level is suitable for un-terminated, low-frequency operation, however the VREF(CA) must be trained to achieve suitable receiver voltage margin for terminated, high-frequency or mid-frequency operation. The training mode described here centers the internal VREF(CA) in the CA data eye and at the same time allows for timing adjustments of the CS and CA signals to meet their Rx Mask requirements. For the training sequence simplicity and difficulty to capture CA inputs prior to training the CA inputs, the training mode described here uses a minimum of external commands to enter, train, and exit the Command Bus Training.

Once LPDDR5 SDRAM has entered CBT mode by MRW, only DES and MRW for exiting CBT mode are allowed.

The LPDDR5 SDRAM supports two Command Bus Training modes and their feature is as follows. CBT mode is selected by MR13 OP[6] ( CBT mode1: MR13 OP[6] = $0_B$, CBT mode2: MR13 OP[6] =$1_B$ )

In multi-rank/channel system sharing the CA bus, the terminated die should be trained first, followed by the nonterminated die(s). See the ODT section for more information. About WCK ODT setting in multi-rank/channel system, only one of SDRAM connected to a common WCK signal can set to CBT mode, the MR of Non CBT trained SDRAM(s) is required to be set MR18 OP[2:0]=$000_B$.

The Corresponding DQ pins in this definition may differ depending on the package configuration. For example, in case of a package which contains Byte-mode devices, DQ[15:8] and DMI[1] balls can be connected to DQ[7:0] and DMI[0] pads of byte-mode device.

#### 4.2.1.1 Three physical Mode Register

LPDDR5 SDRAM has three physical mode registers to reduce MR setting time at changing operating frequency. Active or inactive of mode register is chosen by MR16 OP[3:2]: FSP-OP (Frequency Set Point Operation Mode). Settings that can be specified in MR16 OP[3:2] is FSP-OP[0], FSP-OP[1] and FSP-OP[2].

**Table 23 - Relation between MR16 OP[3:2] Setting and Physical Register Number**

| MR16 OP[3:2] FSP-OP | Symbol | Physical Mode Register Number | | |
|---|---|---|---|---|
| | | 0 | 1 | 2 |
| $00_B$ | FSP-OP[0] | Active | Non-active | Non-active |
| $01_B$ | FSP-OP[1] | Non-active | Active | Non-active |
| $10_B$ | FSP-OP[2] | Non-active | Non-active | Active |

And enabling Write/Read to each mode register is selected by MR16 OP[1:0] FSP-WR (Frequency Set Point Write/Read Enable). MR data can be read/written from/to the selected mode register by FSP-WR.

**Table 24 - Relation between MR16 OP[1:0] Setting and Physical Register Number**

| MR16 OP[1:0] FSP-WR | Symbol | Physical Register Number | | |
|---|---|---|---|---|
| | | 0 | 1 | 2 |
| $00_B$ | FSP-WR[0] | Writable/Readable | - | - |
| $01_B$ | FSP-WR[1] | - | Writable/Readable | - |
| $10_B$ | FSP-WR[2] | - | - | Writable/Readable |

The FSP-OP and FSP-WR functions operate completely independently.

#### 4.2.1.2 Command Bus Training Mode1

The LPDDR5 SDRAM uses Frequency Set Points to enable multiple operating settings for the die. The LPDDR5 SDRAM is initiated to FSP-OP[0] at power-up, which has the default settings to operate in unterminated, low-frequency environments. Prior to training, the mode register settings should be configured by setting MR16 OP[1:0] for FSP-WR (Frequency Set Point Write/Read Enable), setting all other mode register bits for FSP-OP (Frequency Set Point Operation Mode) to make the desired settings for high-frequency or mid-frequency operation, and setting MR16 OP[5:4] for Command Bus Training Mode selection.
Prior to entering Command Bus Training, the LPDDR5 SDRAM will be operating from FSP-OP[x]. Upon Command Bus Training entry when DQ[7] is driven HIGH, the LPDDR5 SDRAM will automatically switch to the active FSP register set FSP-OP[x], FSP-OP[y] or FSP-OP[z] according to MR16 OP[5:4] and use the active register settings during training. Upon Command Bus Training exit when DQ[7] is driven LOW, the LPDDR5 SDRAM will automatically switch back to the original FSP register set FSP-OP[x], returning to the “known-good” state that was operating prior to training.
LPDDR5 SDRAM can select the Command Bus Training CA phase by MR16 OP[7] setting. If MR16 OP[7] = $0_B$, DQ outputs CA pattern latched by CK_t rising edge. If MR16 OP[7] =$1_B$, DQ outputs CA pattern latched by CK_t falling edge.
Differential WCK input is needed during CBT mode. Hence MR20 OP[3:2] is required to set $00_B$ to both FSP set which use CBT training prior to entering CBT mode. In addition, VRCG shall be turned on during CBT mode with DVFSQ.

1) Set MR13 OP[6]=$0_B$ for Command Bus Training Mode1.
2) To enter Command Bus Training mode, issue a MRW-1 command followed by a MRW-2 command to set MR16 OP[5:4] for the CBT mode selection. WCK ODT value is fixed 40ohm regardless of MR18 setting and DQ ODT and NT-ODT state are off during CBT mode. WCK input is required to be valid level (WCK_t = Low and WCK_c = High) and DQ7 is required to be low before MRW-2 command input. After tCBTWCKPRE_static, WCK signal can be toggling. tWCK2DQ7H is required to satisfy before DQ7 goes high.
3) DQ[7] is driven HIGH and when LPDDR5 SDRAM samples HIGH level of DQ[7] by WCK, the LPDDR5 SDRAM switches from FSP-OP[x] to FSP set defined by MR16 OP[5:4] completing the entry into Command Bus Training mode. In this case, WCK doesn't need to synchronize clock (CK) signal. After tDQ7HWCK, WCK can be valid level (WCK_t = Low and WCK_c = High) or changed WCK frequency.
4) At time tCAENT later, LPDDR5 SDRAM can accept to input CA training pattern via CA bus.
5) To verify that the receiver has the correct VREF(CA) setting and to further train the CA eye relative to clock(CK), values latched at the receiver on the CA bus are asynchronously output to the DQ bus.
6) To exit Command Bus Training mode, drive DQ[7] LOW and after time tDQ7LWCK + tVREFCA_LONG issue the MRW command to set MR16 OP[5:4] = $00_B$. After time tMRD the LPDDR5 SDRAM is ready for normal operation. After training exit, the LPDDR5 SDRAM will automatically switch back to the FSP-OP registers that were in use prior to training.

Command Bus Training may be entered from IDLE or Self Refresh states. When entering CBT, the SDRAM must not be a Power Down state or Deep Sleep Mode. Command Bus Training entry and exit is the same, regardless of the SDRAM state from which CBT is initiated.

**Table 25 - Mapping of CA Input pin and DQ Output pin**

| Mapping | | | | | | | |
|---|---|---|---|---|---|---|---|
| CA Number | CA6 | CA5 | CA4 | CA3 | CA2 | CA1 | CA0 |
| DQ Number | DQ6 | DQ5 | DQ4 | DQ3 | DQ2 | DQ1 | DQ0 |

**Training Sequence for single-rank systems**

Note that an example shown here is assuming an initial low-frequency, un-termination operating point, training a high-frequency or a mid-frequency, termination operating point. The blue text is low-frequency, the red text is high-frequency. Any operating point may be trained from any known good operating point. This example is assuming on the following condition. Frequency Set Point “X” for low frequency operation and Frequency Set Point “Y” for high frequency operation.

1) Set MR16 OP[1:0] to enable writing to Frequency Set Point “Y” (FSP-WR[y]).
2) Write FSP-WR[y] registers for all channels to set up high frequency operating parameters.
3) Set MR16 OP[5:4] to select CBT mode (CBT[y]).
4) Issue MRW-1 and MRW-2 commands to enter Command Bus Training mode.
5) Drive DQ[7] HIGH, and then change CK frequency to the high frequency operating point.
6) Perform Command Bus Training (CS and CA).
7) Exit training by driving DQ[7] LOW, a change CK frequency to the low frequency operating point prior to driving DQ[7] Low, and then issue MRW-1 and MRW-2 commands to exit Command Bus Training mode. When DQ[7] is driven LOW and SDRAM samples the LOW level of DQ[7] by WCK, the SDRAM will automatically switch back to the FSP-OP registers that were in use prior to training.
8) Write the trained values to FSP-WR[y] by issuing MRW-1 and MRW-2 commands to the SDRAM and setting all applicable mode register parameters.
9) Issue MRW-1 and MRW-2 commands to switch to FSP-OP[y] to turn on termination, and change CK frequency to the high frequency operation point. At this point the Command Bus is trained and other training or normal operation can be executed.

**Training Sequence for multi-rank systems**

Note that an example shown here is assuming an initial low-frequency, un-termination operating point, training a high-frequency or a mid-frequency, termination operating point. The blue text is low-frequency, the red text is high-frequency. Any operating point may be trained from any known good operating point. This example is assuming on the following condition. Frequency Set Point "X" for low frequency operation and Frequency Set Point "Y" for high frequency operation. FSP-WR[x] and FSP-OP[x] are initial state for both terminated rank and non-terminated rank. WCK ODT and NT-ODT for both terminated rank and non-terminated rank are required to be disabled with both FSP-OP[x] and FSP-OP[y] prior to start the command bus training: WCK ODT: MR18 OP[2:0]=$000_B$, NT-ODT: MR11 OP[3]=$0_B$ or MR41 OP[7:5]=$000_B$. The reason why recommended WCK ODT and NT-ODT setting to be disabled is that to ensure sufficient amplitude for WCK and DQ[7] input. Since these signal pins are applied several functions during CBT mode, controlling entering/exiting CBT mode and capturing DQ[7] input level, for example.

1) Set MR16 OP[1:0] to enable writing to Frequency Set Point "Y" (FSP-WR[y]) for both ranks.
2) Write FSP-WR[y] registers for all channels to set up high frequency operating parameters for both ranks.
3) Issue MRW-1 and MRW-2 commands to enter Command Bus Training mode (CBT[y]) on the terminating rank: Set MR16 OP[5:4] to select CBT mode (CBT[y]).
4) Drive DQ[7] HIGH on the terminating rank (or all ranks), and then change CK frequency to the high frequency operating point.
5) Perform Command Bus Training on the terminating rank (CS and CA).
6) A change CK frequency to the low frequency operating point, and then driving DQ[7] LOW on the terminating rank (or all ranks). When DQ[7] is driven LOW and SDRAM samples the LOW level of DQ[7] by WCK, the SDRAM will automatically switch back to the FSP-OP registers that were in use prior to training (i.e. trained values are not retained by the SDRAM)
7) Issue MRW-1 and MRW-2 commands to exit Command Bus Training mode (Normal Operation) on the terminating rank: Set MR16 OP[5:4] to select Normal Operation.
8) Write the trained values to FSP-WR[y] of the terminating rank by issuing MRW-1 and MRW-2 commands to the SDRAM and setting all applicable mode register parameters.
9) Issue MRW-1 and MRW-2 commands to enter Command Bus Training mode (CBT[y]) on the non-terminating rank: Set MR16 OP[5:4] to select CBT mode (CBT[y]). But, keep DQ[7] LOW.
10) Issue MRW-1 and MRW-2 commands to switch the terminating rank to FSP-OP[y] to turn on termination. and then change CK frequency to the high frequency operating point.
11) Drive DQ[7] HIGH on the non-terminating (or all) ranks. The non-terminating rank(s) will now be using FSP-OP[y].
12) Perform Command Bus Training on the non-terminating rank (CS and CA).
13) Issue MRW-1 and MRW-2 commands to switch the terminating rank to FSP-OP[x] to turn off termination.
14) Exit training by driving DQ[7] LOW on the non-terminating rank, change CK frequency to the low frequency operating point, and issue MRW-1 and MRW-2 commands to exit Command Bus Training mode. When DQ[7] is driven LOW and SDRAM samples the LOW level of DQ[7] by WCK, the SDRAM will automatically switch back to the FSP-OP registers that were in use prior to training.
15) Write the trained values of the non-terminating rank to FSP-WR[y] by issuing MRW-1 and MRW-2 commands to the SDRAM and setting all applicable mode register parameters.

16) Issue MRW-1 and MRW-2 commands to switch the terminating rank to FSP-OP[y] to turn on termination, and change CK frequency to the high frequency operation point. At this point the Command Bus is trained for both ranks and other training or normal operation can be executed.

The basic timing diagrams of Command Bus Training Mode1 are shown in following figures.

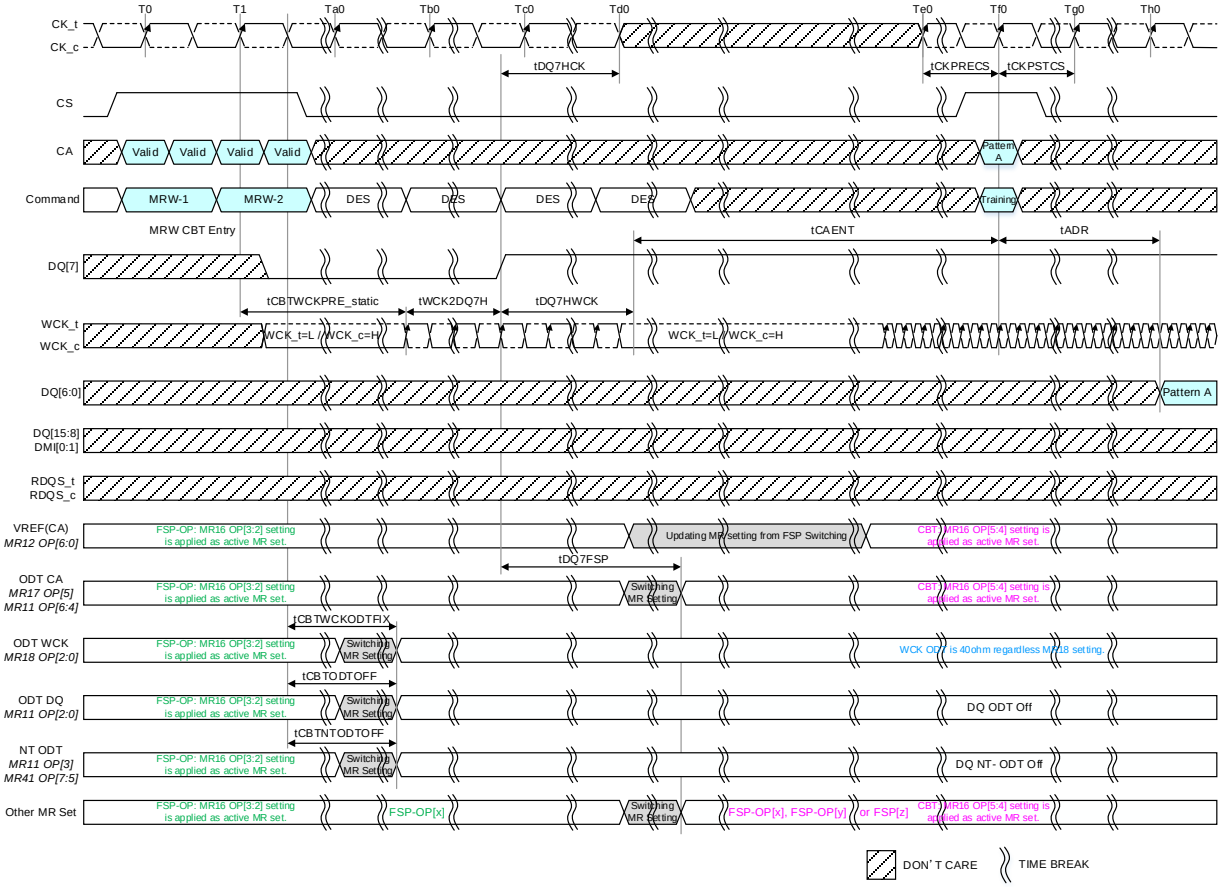


NOTE 1 After tDQ7HCK, clock (CK) can be stopped or frequency changed any time.
NOTE 2 The input clock condition should be satisfied tCKPRECS.
NOTE 3 Continue to drive CK and hold CS pins low until tDQ7HCK after DQ[7] goes HIGH.
NOTE 4 After DQ[7] is driven HIGH and the SDRAM samples the HIGH level of DQ[7] by WCK toggle in Command Bus Training mode, the SDRAM will switch its FSP-OP registers to use the alternate(i.e. non-active) set. Example: If the SDRAM is currently using FSP-OP[0], then it will switch to FSP-OP[1] when DQ[7] is driven HIGH and sampled HIGH level by WCK toggle. All operating parameters should be written to the alternate mode registers before entering Command Bus Training to ensure that ODT settings, RL/WL/nWR setting, etc., are set to the correct values. If the alternate FSP-OP has ODT CA disabled then termination will not enable in CA Bus Training mode.
NOTE 5 WCK ODT state is set to a fixed value and DQ ODT/NT-ODT are turned off during CBT operation.
NOTE 6 The same FSP and clock frequency may be used before and after Command Bus Training entry.
NOTE 7 CBT Phase: MR16 OP[7] = $0_B$

**Figure 25 - Entering Command Bus Training Mode and CA Training Pattern Input and Output (WCK Frequency change)**

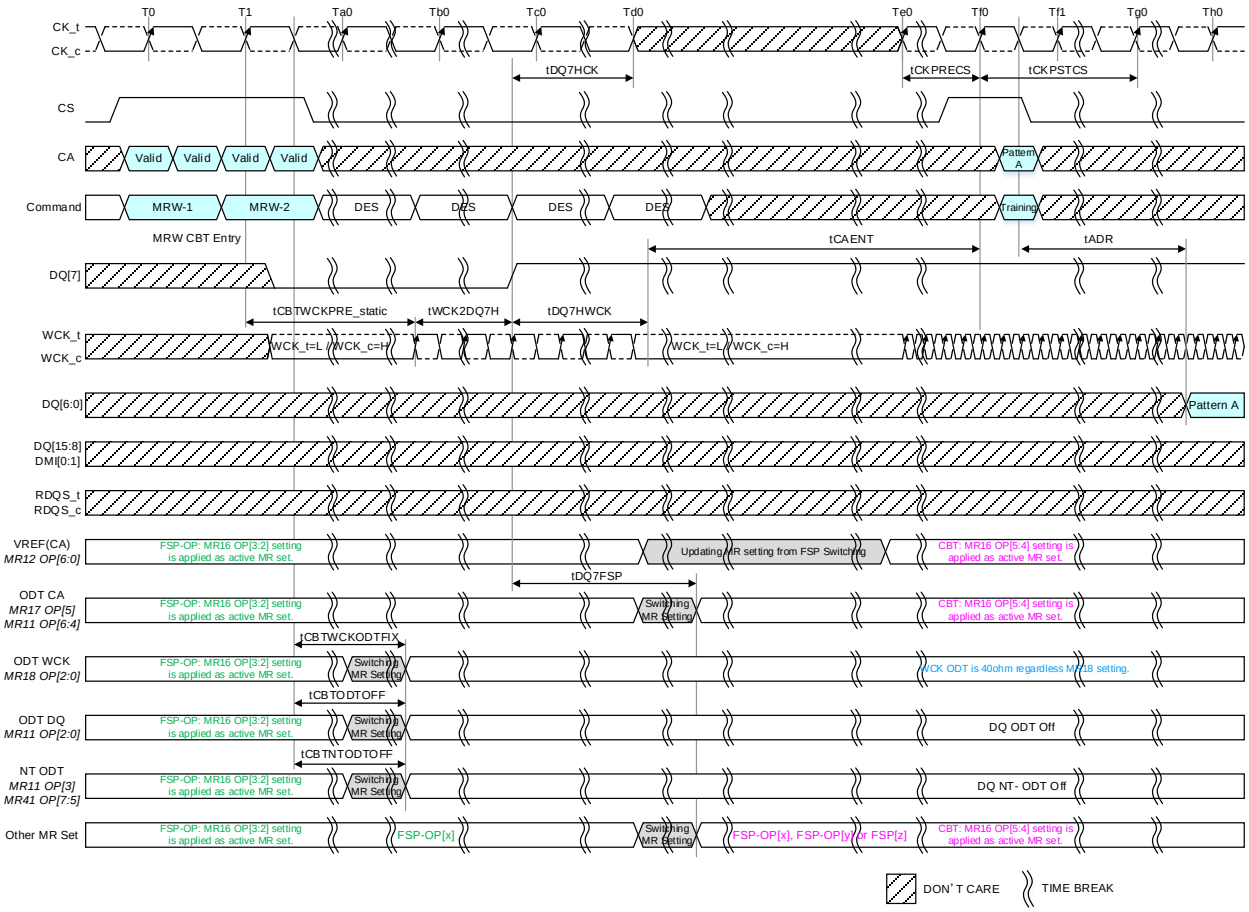


NOTE 1 After tDQ7HCK, clock (CK) can be stopped or frequency changed any time.

NOTE 2 The input clock condition should be satisfied tCKPRECS.

NOTE 3 Continue to drive CK and hold CS pins low until tDQ7HCK after DQ[7] goes HIGH.

NOTE 4 After DQ[7] is driven HIGH and the SDRAM samples the HIGH level of DQ[7] by WCK toggle in Command Bus Training mode, the SDRAM will switch its FSP-OP registers to use the alternate(i.e. non-active) set. Example: If the SDRAM is currently using FSP-OP[0], then it will switch to FSP-OP[1] when DQ[7] is driven HIGH and sampled HIGH level by WCK toggle. All operating parameters should be written to the alternate mode registers before entering Command Bus Training to ensure that ODT settings, RL/WL/nWR setting, etc., are set to the correct values. If the alternate FSP-OP has ODT CA disabled then termination will not enable in CA Bus Training mode.

NOTE 5 WCK ODT state is set to a fixed value and DQ ODT/NT-ODT are turned off during CBT operation.

NOTE 6 WCK frequency is don't care during CBT operation as far as the frequency is within the allowed range of each frequency mode (MR18 OP[3]). WCK toggle may stopped after tDQ7HWCK, but WCK pair should be driven at static levels (WCK_t/c = Low/High). WCK should toggle to satisfy tWCK2DQ7H before DQ[7] changes again.

NOTE 7 The same FSP and clock frequency may be used before and after Command Bus Training entry.

NOTE 8 CBT Phase: MR16 OP[7] = $1_B$

**Figure 26 - Entering Command Bus Training Mode and CA Training Pattern Input and Output (WCK Frequency change: Fall Edge Training)**

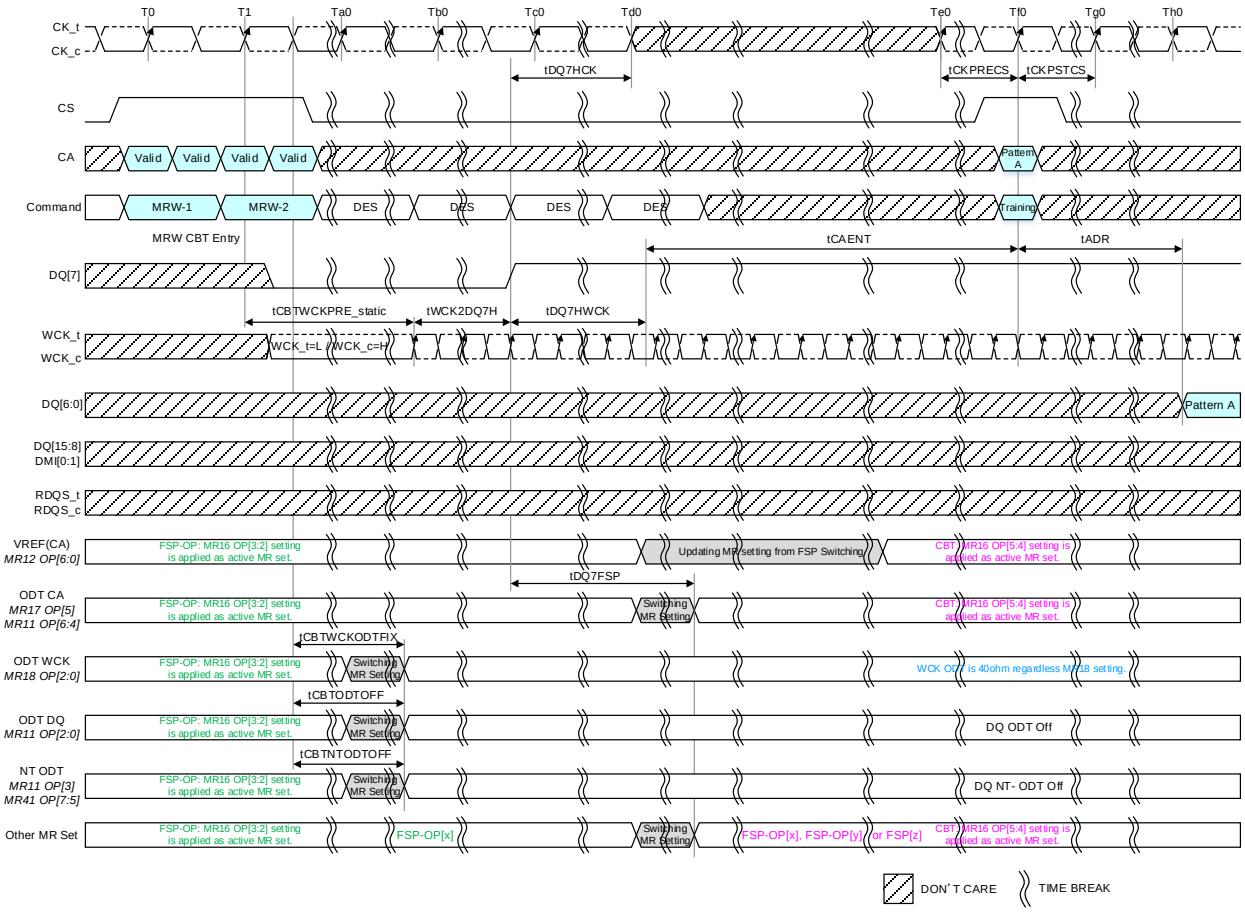


NOTE 1 After tDQ7HCK, clock (CK) can be stopped or frequency changed any time.

NOTE 2 The input clock condition should be satisfied tCKPRECS.

NOTE 3 Continue to drive CK and hold CS pins low until tDQ7HCK after DQ[7] goes HIGH.

NOTE 4 After DQ[7] is driven HIGH and the SDRAM samples the HIGH level of DQ[7] by WCK toggle in Command Bus Training mode, the SDRAM will switch its FSP-OP registers to use the alternate(i.e. non-active) set. Example: If the SDRAM is currently using FSP-OP[0], then it will switch to FSP-OP[1] when DQ[7] is driven HIGH and sampled HIGH level by WCK toggle. All operating parameters should be written to the alternate mode registers before entering Command Bus Training to ensure that ODT settings, RL/WL/nWR setting, etc., are set to the correct values. If the alternate FSP-OP has ODT CA disabled then termination will not enable in CA Bus Training mode.

NOTE 5 WCK ODT state is set to a fixed value and DQ ODT/NT-ODT are turned off during CBT operation.

NOTE 6 Set fixed WCK frequency during CBT operation regardless of CK:WCK ratio.
WCK frequency is don't care during CBT operation as far as the frequency is within the allowed range of each frequency mode (MR18 OP[3]).. WCK toggle may stopped after tDQ7HWCK, but WCK pair should be driven at static levels (WCK_t/c = Low/High). WCK should toggle to satisfy tWCK2DQ7H before DQ[7] changes again.

NOTE 7 The same FSP and clock frequency may be used before and after Command Bus Training entry.

NOTE 8 CBT Phase: MR16 OP[7] = $0_B$

**Figure 27 - Entering Command Bus Training Mode and CA Training Pattern Input and Output (Fixed WCK Frequency)**

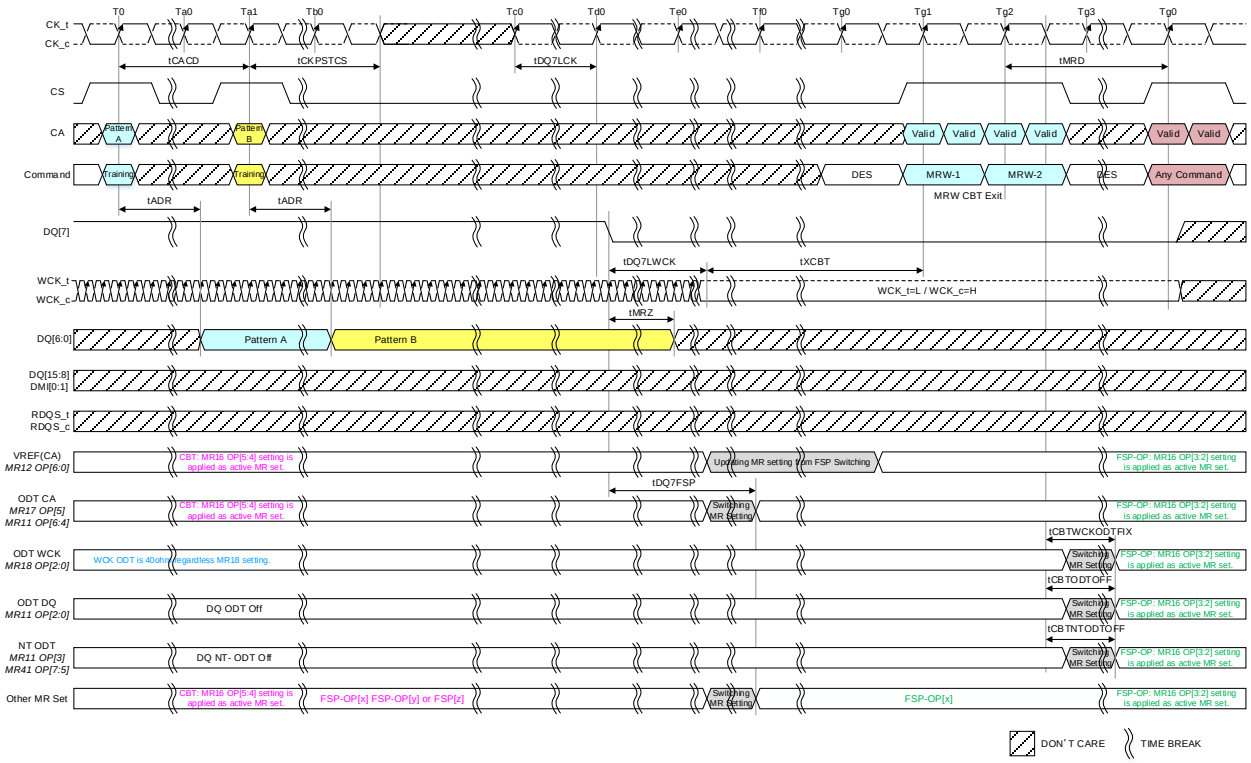


NOTE 1 CK is required to satisfy tDQ7LCK before DQ[7] is driven low.

NOTE 2 DQ[7] and WCK signal are required to be valid level until tMRD which is caused by MRW command to exiting this mode is satisfied.

NOTE 3 After DQ[7] is driven low and the SDRAM samples the LOW level of DQ[7] by WCK toggle, the SDRAM ODT_CA will revert to the state/value defined by FSP-OP prior to Command Bus Training mode entry, i.e. the original frequency set point (FSP-OP).
Example: If the SDRAM was using FSP-OP[x], FSP-OP[y] or FSP-OP[z] for training, then it will switch to FSP-OP[x] after DQ[7] is driven LOW and sampled LOW level by WCK toggle.

NOTE 4 WCK doesn't need to synchronize with clock signal during CBT mode.

**Figure 28 – Consecutive CA input and Exiting Command Bus Training Mode**

**Table 26 - Command Bus Training AC Timing Table**

| Item | Symbol | Min/ Max | Data Rate (Mbps) | | | | | | | | | | | | Unit | Notes |
|---|---|---|---|---|---|---|---|---|---|---|---|---|---|---|---|---|
| | | | 533 | 1066 | 1600 | 2133 | 2750 | 3200 | 3733 | 4266 | 4800 | 5500 | 6000 | 6400 | | |
| Command Bus Training Timing | | | | | | | | | | | | | | | | |
| Static WCK period (CBT entry to WCK toggling start) | tCBTWCKPRE_static | Min | Max(20ns, 2nCK) | | | | | | | | | | | | ns | |
| Set-up margin between DQ7 and WCK | tWCK2DQ7H | Min | Max(5ns, 12nWCK) | | | | | | | | | | | | ns | |
| Hold margin between DQ7 and WCK | tDQ7HWCK | Min | Max(5ns, 12nWCK) | | | | | | | | | | | | ns | |
| Clock and Command Valid after DQ7 HIGH | tDQ7HCK | Min | Max(5ns, 3nCK) | | | | | | | | | | | | ns | |
| ODT CA change latency after DQ7 HIGH | tDQ7FSP | Max | 20 | | | | | | | | | | | | ns | |
| Valid Clock Requirement before CS High | tCKPRECS | Min | 2tCK + tXP (tXP = Max(7.5ns, 3nCK) ) | | | | | | | | | | | | ns | |
| Valid Clock Requirement after CS High | tCKPSTCS | Min | Max(7.5ns, 3nCK) | | | | | | | | | | | | ns | |
| Delay time from DQ[7] High to CA Bus Training | tCAENT | Min | 250 | | | | | | | | | | | | ns | |
| Asynchronous Data Read | tADR | Max | 20 | | | | | | | | | | | | ns | |
| CA Bus Training Command to CA Bus Training Command delay | tCACD | Min | RU(tADR/tCK) | | | | | | | | | | | | tCK | 1 |
| Valid Clock Requirement before DQ7 Low | tDQ7LCK | Min | Max(5ns, 3nCK) | | | | | | | | | | | | ns | |
| DQ<7> Low to DQ driver off | tMRZ | Min | 1.5 | | | | | | | | | | | | ns | |
| DQ7 Low to static WCK | tDQ7LWCK | Min | Max(5ns, 12nWCK) | | | | | | | | | | | | ns | |
| Exit Command Bus Training Mode to next valid command delay | tXCBT | Min | Max(5nCK, 250ns) | | | | | | | | | | | | ns | |
| Stable time for WCK ODT | tCBTWCKODTFIX | Max | 20 | | | | | | | | | | | | ns | |
| Turned off time for DQ ODT | tCBTODTOFF | Max | 20 | | | | | | | | | | | | ns | |
| Turn off time for NT-ODT | tCBTNTODTOFF | Max | 20 | | | | | | | | | | | | ns | |

NOTE 1 If tCACD is violated, the data for samples which violate tCACD will not be available, except for the last sample (where tCACD after this sample is met). Valid data for the last sample will be available after tADR.

#### 4.2.1.3 Command Bus Training Mode1 (FSP with DVFSQ enable)

CBT for FSP with DVFSQ enable(MR19 OP3[3:2]=$01_B$), follow below steps.
This section will apply to SDRAM which supports DVFSQ function.
The red text is DVFSQ disabled mode, the blue text is DVFSQ enabled mode.

1) Set MR16 OP[1:0] to enable writing to Frequency Set Point "Y" (FSP-WR[y]).
2) Write FSP-WR[y] registers for all channels to set up DVFSQ enabled operating parameters.
3) Disable SoC ODT and set MRW MR17 OP[2:0]=$000_B$.
4) In case of Background ZQ calibration mode, issue MRW MR28 to set ZQ_STOP(MR28 OP[1]=1B) and Wait tZQSTOP.
5) Set to VRCG VREF High Current Mode: MR16 OP[6]=$1_B$ and wait tVRCG Enable
6) Set MR16 OP[5:4] to select CBT mode (CBT[y]) by MRW-1 and MRW-2 commands: Entering CBT mode.
7) Drive DQ[7] HIGH, and then ramp VDDQ down to 0.3V nominal. (Do not TRAIN HERE!) For VDDQ slew rate, VDQSR1, refer to "DVFSQ mode" spec.
8) VREFCA update timing, tVREF_CA_long is required after the VDDQ ramp down is completed.
9) Perform Command Bus Training (CS and CA).
10) Before the CBT exit, ramp VDDQ up to 0.5V nominal. For VDDQ slew rate, VDQSR1, refer to "DVFSQ mode" spec. Change CK frequency to the FSP[x] frequency operating point prior to driving DQ[7] Low
11) Exit training by driving DQ[7] LOW. When DQ[7] is driven LOW and SDRAM samples the LOW level of DQ[7] by WCK, the SDRAM will automatically switch back to the FSP-OP registers that were in use prior to training (i.e. trained values are not retained by the SDRAM).
12) Wait tXCBT
13) Issue MRW-1 and MRW-2 commands to exit Command Bus Training mode and to set VRCG VREF High Current mode is disabled as needed
14) Issue ZQ_Stop (set MR28 OP[1]=$0_B$) for starting Background ZQ Calibration.
15) Wait tZQCALx and issue ZQCal Latch commands.
16) Write the trained values to FSP-WR[y] by issuing MRW-1 and MRW-2 commands to the SDRAM and setting all applicable mode register parameters.
17) Issue MRW-1 and MRW-2 commands to switch to FSP-OP[y] to turn on termination, and change CK frequency and VDDQ level to the FSP-OP[y] operation point. At this point the Command Bus is trained and other training or normal operation can be executed.

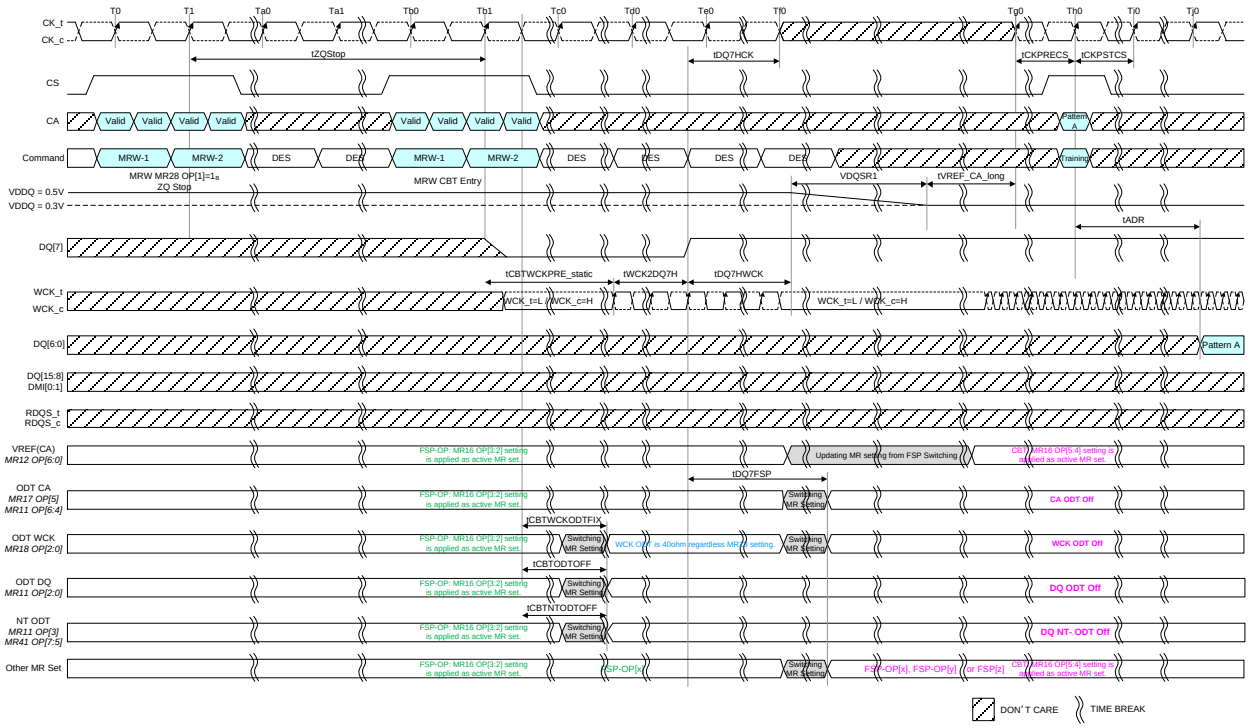


NOTE 1 After tDQ7HCK, clock (CK) can be stopped or frequency changed any time.

NOTE 2 The input clock condition should be satisfied tCKPRECS.

NOTE 3 Continue to drive CK and hold CS pins low until tDQ7HCK after DQ[7] goes HIGH.

NOTE 4 After DQ[7] is driven HIGH and the SDRAM samples the HIGH level of DQ[7] by WCK toggle in Command Bus Training mode, the SDRAM will switch its FSP-OP registers to use the alternate(i.e. non-active) set. Example: If the SDRAM is currently using FSP-OP[0], then it will switch to FSP-OP[1] when DQ[7] is driven HIGH and sampled HIGH level by WCK toggle. All operating parameters should be written to the alternate mode registers before entering Command Bus Training to ensure that ODT settings, RL/WL/nWR setting, etc., are set to the correct values.

NOTE 5 CA ODT, WCK ODT and DQ ODT/NT-ODT are turned off during CBT with DVFSQ operation.

NOTE 6 The same FSP and clock frequency may be used before and after Command Bus Training entry.

NOTE 7 CBT Phase: MR16 OP[7] = $0_B$

**Figure 29 - Entering Command Bus Training Mode and CA Training Pattern Input and Output (Background ZQ Calibration)**

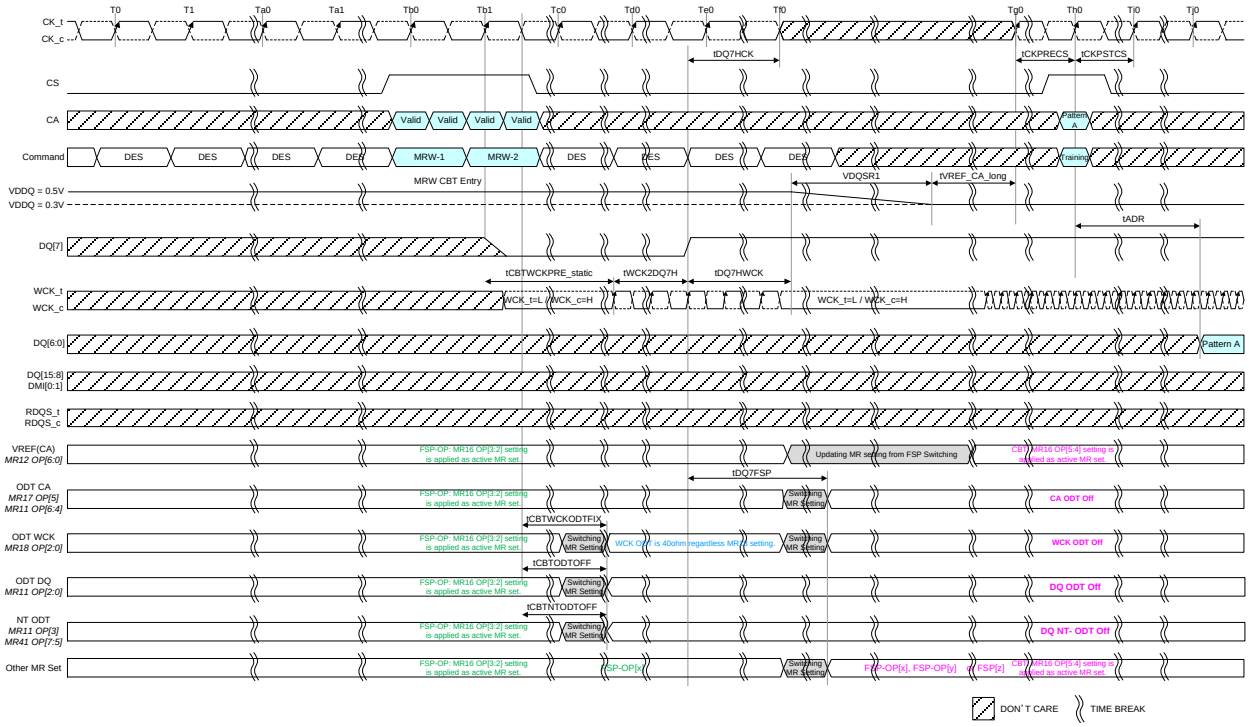


NOTE 1 After tDQ7HCK, clock (CK) can be stopped or frequency changed any time.
NOTE 2 The input clock condition should be satisfied tCKPRECS.
NOTE 3 Continue to drive CK and hold CS pins low until tDQ7HCK after DQ[7] goes HIGH.
NOTE 4 After DQ[7] is driven HIGH and the SDRAM samples the HIGH level of DQ[7] by WCK toggle in Command Bus Training mode, the SDRAM will switch its FSP-OP registers to use the alternate(i.e. non-active) set. Example: If the SDRAM is currently using FSP-OP[0], then it will switch to FSP-OP[1] when DQ[7] is driven HIGH and sampled HIGH level by WCK toggle. All operating parameters should be written to the alternate mode registers before entering Command Bus Training to ensure that ODT settings, RL/WL/nWR setting, etc., are set to the correct values.
NOTE 5 CA ODT, WCK ODT and DQ ODT/NT-ODT are turned off during CBT with DVFSQ operation.
NOTE 6 The same FSP and clock frequency may be used before and after Command Bus Training entry.
NOTE 7 CBT Phase: MR16 OP[7] = $0_B$

**Figure 30 - Entering Command Bus Training Mode and CA Training Pattern Input and Output (Command-based ZQ Calibration)**

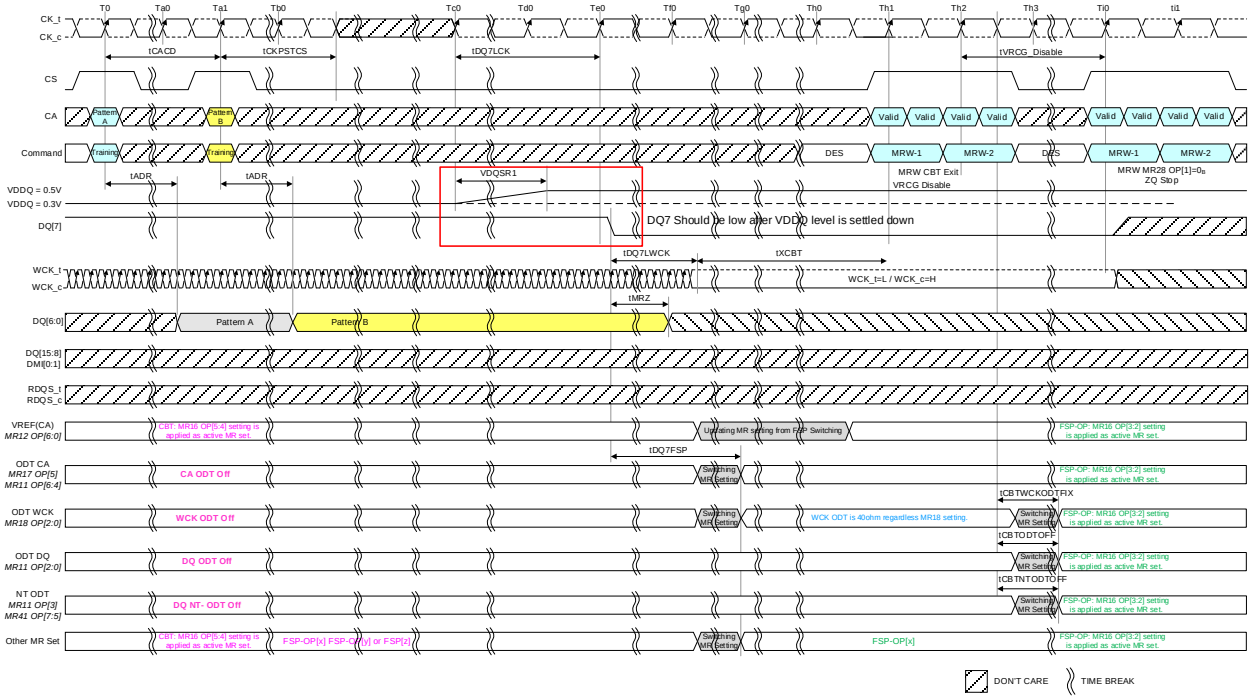


NOTE 1 CK is required to satisfy tDQ7LCK before DQ[7] is driven low.

NOTE 2 DQ[7] and WCK signal are required to be valid level until tMRD which is caused by MRW command to exiting this mode is satisfied.

NOTE 3 After DQ[7] is driven low and the SDRAM samples the LOW level of DQ[7] by WCK toggle, the SDRAM ODT_CA will revert to the state/value defined by FSP-OP prior to Command Bus Training mode entry, i.e. the original frequency set point (FSP-OP).
Example: If the SDRAM was using FSP-OP[x], FSP-OP[y] or FSP-OP[z] for training, then it will switch to FSP-OP[x] after DQ[7] is driven LOW and sampled LOW level by WCK toggle.

NOTE 4 WCK doesn't need to synchronize with clock signal during CBT mode.

**Figure 31 – Consecutive CA input and Exiting Command Bus Training Mode (Background ZQ Calibration)**

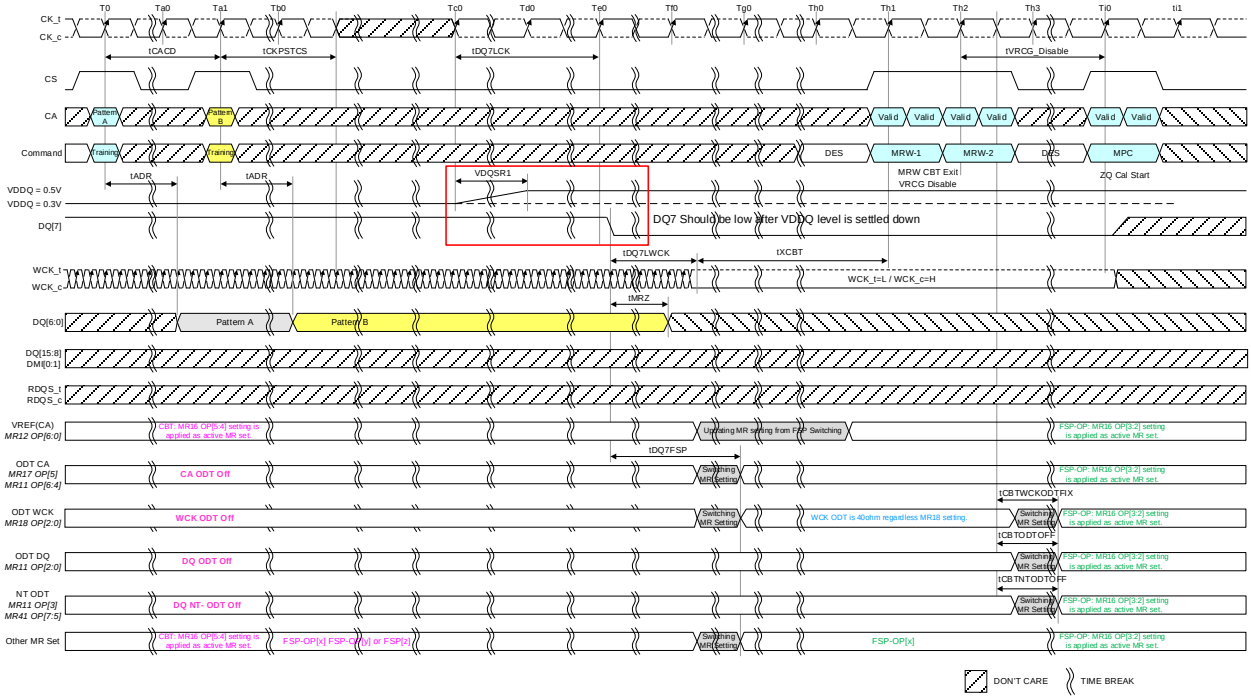


NOTE 1 CK is required to satisfy tDQ7LCK before DQ[7] is driven low.

NOTE 2 DQ[7] and WCK signal are required to be valid level until tMRD which is caused by MRW command to exiting this mode is satisfied.

NOTE 3 After DQ[7] is driven low and the SDRAM samples the LOW level of DQ[7] by WCK toggle, the SDRAM ODT_CA will revert to the state/value defined by FSP-OP prior to Command Bus Training mode entry, i.e. the original frequency set point (FSP-OP).
Example: If the SDRAM was using FSP-OP[x], FSP-OP[y] or FSP-OP[z] for training, then it will switch to FSP-OP[x] after DQ[7] is driven LOW and sampled LOW level by WCK toggle.

NOTE 4 WCK doesn't need to synchronize with clock signal during CBT mode.

**Figure 32 – Consecutive CA input and Exiting Command Bus Training Mode (Command-based ZQ Calibration)**

#### 4.2.1.4 Command Bus Training Mode2

The LPDDR5 SDRAM uses Frequency Set Points to enable multiple operating settings for the die. The LPDDR5 SDRAM is initiated to FSP-OP[0] at power-up, which has the default settings to operate in unterminated, low-frequency environments. Prior to training, the mode register settings should be configured by setting MR16 OP[1:0] for FSP-WR (Frequency Set Point Write/Read Enable), setting all other mode register bits for FSP-OP (Frequency Set Point Operation Mode) to make the desired settings for high-frequency or mid-frequency operation, and setting MR16 OP[5:4] for Command Bus Training Mode selection.
Prior to entering Command Bus Training, the LPDDR5 SDRAM will be operating from FSP-OP[x]. Upon Command Bus Training entry when DQ[7] is driven HIGH, the LPDDR5 SDRAM will automatically switch to the active FSP register set FSP-OP[x], FSP-OP[y] or FSP-OP[z] according to MR16 OP[5:4] and use the active register settings during training. Upon Command Bus Training exit when DQ[7] is driven LOW, the LPDDR5 SDRAM will automatically switch back to the original FSP register set FSP-OP[x], returning to the “known-good” state that was operating prior to training. The training values for VREF(CA) are not retained by the DRAM in FSP-OP[y] or FSP-OP[z] registers, and must be written to the registers after training exit.
LPDDR5 SDRAM can select the Command Bus Training CA phase by MR16 OP[7] setting. If MR16 OP[7] =$0_B$, DQ outputs CA pattern latched by CK_t rising edge. If MR16 OP[7] =$1_B$, DQ outputs CA pattern latched by CK_t falling edge.
Differential WCK input is needed during CBT mode. Hence MR20 OP[3:2] is required to set $00_B$ to both FSP set which use CBT training prior to entering CBT mode. In addition, VRCG shall be turned on during CBT mode with DVFSQ.

1) Set MR13 OP[6]=$1_B$ for Command Bus Training Mode2.
2) To enter Command Bus Training mode, issue a MRW-1 command followed by a MRW-2 command to set MR16 OP[5:4] for the CBT mode selection. WCK ODT value is fixed to 40ohm regardless of MR18 setting, DQ ODT and NT-ODT states are turned off. WCK_t, and WCK_c are input pins for capturing DQ[7], DMI[0] levels by its toggling and DMI[0] is a dedicated pin for capturing the VrefCA setting from DQ[6:0] during CBT mode. WCK input is required to be valid level (WCK_t = Low and WCK_c = High), DQ[6:0] are required to be valid level and, DQ[7] and DMI[0] are required to be low before the MRW-2 command input. After tCBTWCKPRE_static, WCK signal can be toggling and tWCK2DQ7H is required to be satisfied before DQ7 goes high.
   DQ[7] is driven HIGH and when the LPDDR5 SDRAM samples the high level of DQ[7] by WCK, the LPDDR5 SDRAM switches from FSP-OP[x] to FSP set defined by MR16 OP[5:4] completing the entry into Command Bus Training mode. When entering command Bus Training mode:
   - DQ[6:0] become input pins for setting VREF(CA) level and the VREF(CA) level is captured at the internal DMI[0] rising edge which LPDDR5 SDRAM samples High level of DMI[0] by WCK. The input level of DQ[6:0] is required to remain during the tDStrain + tDHtrain period and DMI[0] should be maintained "High" for tDHtrain, completing the latching of specific patterns.
   - DQ[6:0] become output pins to feedback the captured value via the command address bus from the CS HIGH signal until Low level of DMI[0] is sampled by WCK.
   - DMI[0] is used as a strobe pin for VREF(CA) setting updates via DQ[6:0] and is also used as a DQ[6:0] output-mode-off switch. The LPDDR5 SDRAM samples DQ[6:0] levels by the internal DMI[0] rising edge and then updates its VREF(CA) setting.
   - When the LOW level of DMI[0] is sampled by WCK, DQ[6:0] output mode is turned-off and input mode is turned on.

3) After tDQ7HWCK and tDQ72DQ from DQ[7] riding edge, the LPDDR5 SDRAM can accept its VREF(CA) value change using input signals of DQ[6:0]. The LPDDR5 SDRAM samples DQ[6:0] by the internal DMI[0] rising edge and then updates the existing value that was set via MR12 OP[6:0]. The mapping between MR12 OP code and DQ's is shown Table 27. At least one VREF(CA) setting is required before proceeding to the next training steps.
4) The new VREF(CA) value must “settle” for time tVREF_LONG before attempting to latch CA information.
5) To verify that the receiver has the correct VREF(CA) setting and to further train the CA eye relative to clock(CK), values latched at the receiver on the CA bus are asynchronously output to the DQ bus.
6) To exit Command Bus Training mode, change CK frequency to the low frequency operating point and then drive DQ[7] Low. After time tDQ7LWCK + tXCBT issue the MRW command to set MR16 OP[5:4] = $00_B$. After time tMRD the LPDDR5 SDRAM is ready for normal operation. After training exit, the LPDDR5 SDRAM will automatically switch back to the FSP-OP registers that were in use prior to training. Command Bus Training may be entered from IDLE or Self Refresh states. When entering CBT in the Self Refresh state, the SDRAM is not required to be in a Power Down state or Deep Sleep Mode. Command Bus Training entry and exit is the same, regardless of the SDRAM state from which CBT is initiated.

Command Bus Training may be entered from IDLE or Self Refresh states. When entering CBT, the SDRAM must not be a Power Down state or Deep Sleep Mode. Command Bus Training entry and exit is the same, regardless of the SDRAM state from which CBT is initiated.

**Table 27 - Mapping of MR12 OP Code and DQ Numbers**

| | Mapping | | | | | | |
|---|---|---|---|---|---|---|---|
| MR12 OP code | OP6 | OP5 | OP4 | OP3 | OP2 | OP1 | OP0 |
| DQ Number | DQ6 | DQ5 | DQ4 | DQ3 | DQ2 | DQ1 | DQ0 |

**Table 28 - Mapping of CA Input pin and DQ Output pin**

| | Mapping | | | | | | |
|---|---|---|---|---|---|---|---|
| CA Number | CA6 | CA5 | CA4 | CA3 | CA2 | CA1 | CA0 |
| DQ Number | DQ6 | DQ5 | DQ4 | DQ3 | DQ2 | DQ1 | DQ0 |

**Training Sequence for single-rank systems**

Note that an example shown here is assuming an initial low-frequency, un-termination operating point, training a high-frequency or a mid-frequency, termination operating point. The blue text is low-frequency,

The red text is high-frequency. Any operating point may be trained from any known good operating point. This example is assuming on the following condition. Frequency Set Point “X” for low frequency operation and Frequency Set Point “Y” for high frequency operation.

1) Set MR16 OP[1:0] to enable writing to Frequency Set Point “Y” (FSP-WR[y]).
2) Write FSP-WR[y] registers for all channels to set up high frequency operating parameters.
3) Set MR16 OP[5:4] to select CBT mode (CBT[y]).
4) Issue MRW-1 and MRW-2 commands to enter Command Bus Training mode.
5) Drive DQ[7] HIGH, and then change CK frequency to the high frequency operating point.
6) Perform Command Bus Training (VREF(CA), CS and CA).
7) Exit training by driving DQ[7] LOW, a change CK frequency to the low frequency operating point prior to driving DQ[7] Low, and then issue MRW-1 and MRW-2 commands to exit Command Bus Training mode. When DQ[7] is driven LOW and SDRAM samples the LOW level of DQ[7] by WCK, the SDRAM will automatically switch back to the FSP-OP registers that were in use prior to training (i.e. trained values are not retained by the SDRAM).
8) Write the trained values to FSP-WR[y] by issuing MRW-1 and MRW-2 commands to the SDRAM and setting all applicable mode register parameters.
9) Issue MRW-1 and MRW-2 commands to switch to FSP-OP[y] to turn on termination, and change CK frequency to the high frequency operation point. At this point the Command Bus is trained and other training or normal operation can be executed.

**Training Sequence for multi-rank systems**

Note that an example shown here is assuming an initial low-frequency, un-termination operating point, training a high-frequency or a mid-frequency, termination operating point. The blue text is low-frequency, the red text is high-frequency. Any operating point may be trained from any known good operating point. This example is assuming on the following condition. Frequency Set Point "X" for low frequency operation and Frequency Set Point "Y" for high frequency operation. FSP-WR[x] and FSP-OP[x] are initial state for both terminated rank and non-terminated rank. WCK ODT and NT-ODT for both terminated rank and non-terminated rank are required to be disabled with both FSP-OP[x] and FSP-OP[y] prior to start the command bus training: WCK ODT: MR18 OP[2:0]=$000_B$, NT-ODT: MR11 OP[3]=$0_B$ or MR41 OP[7:5]=$000_B$. The reason why recommended WCK ODT and NT-ODT setting to be disabled is that to ensure sufficient amplitude for WCK, DQ[7:0] and DMI input. Since these signal pins are applied several functions during CBT mode, controlling entering/exiting CBT mode and capturing DQ[7] input level, for example.

1) Set MR16 OP[1:0] to enable writing to Frequency Set Point "Y" (FSP-WR[y]) for both ranks.
2) Write FSP-WR[y] registers for all channels to set up high frequency operating parameters for both ranks.
3) Issue MRW-1 and MRW-2 commands to enter Command Bus Training mode (CBT[y]) on the terminating rank: Set MR16 OP[5:4] to select CBT mode (CBT[y]).
4) Drive DQ[7] HIGH on the terminating rank (or all ranks), and then change CK frequency to the high frequency operating point.
5) Perform Command Bus Training on the terminating rank (VREF(CA), CS and CA).
6) A change CK frequency to the low frequency operating point, and then driving DQ[7] LOW on the terminating rank (or all ranks). When DQ[7] is driven LOW and SDRAM samples the LOW level of DQ[7] by WCK, the SDRAM will automatically switch back to the FSP-OP registers that were in use prior to training (i.e. trained values are not retained by the SDRAM)
7) Issue MRW-1 and MRW-2 commands to exit Command Bus Training mode (Normal Operation) on the terminating rank: Set MR16 OP[5:4] to select Normal Operation.
8) Write the trained values to FSP-WR[y] of the terminating rank by issuing MRW-1 and MRW-2 commands to the SDRAM and setting all applicable mode register parameters.
9) Issue MRW-1 and MRW-2 commands to enter Command Bus Training mode (CBT[y]) on the non-terminating rank: Set MR16 OP[5:4] to select CBT mode (CBT[y]). But, keep DQ[7] LOW.
10) Issue MRW-1 and MRW-2 commands to switch the terminating rank to FSP-OP[y] to turn on termination. and then change CK frequency to the high frequency operating point.
11) Drive DQ[7] HIGH on the non-terminating (or all) ranks. The non-terminating rank(s) will now be using FSP-OP[y].
12) Perform Command Bus Training on the non-terminating rank (VREF(CA), CS and CA).
13) Issue MRW-1 and MRW-2 commands to switch the terminating rank to FSP-OP[x] to turn off termination.
14) Exit training by driving DQ[7] LOW on the non-terminating rank, change CK frequency to the low frequency operating point, and issue MRW-1 and MRW-2 commands to exit Command Bus Training mode. When DQ[7] is driven LOW and SDRAM samples the LOW level of DQ[7] by WCK, the SDRAM will automatically switch back to the FSP-OP registers that were in use prior to training (i.e. trained values are not retained by the SDRAM).
15) Write the trained values of the non-terminating rank to FSP-WR[y] by issuing MRW-1 and MRW-2 commands to the SDRAM and setting all applicable mode register parameters.

16) Issue MRW-1 and MRW-2 commands to switch the terminating rank to FSP-OP[y] to turn on termination, and change CK frequency to the high frequency operation point. At this point the Command Bus is trained for both ranks and other training or normal operation can be executed.

The basic timing diagrams of Command Bus Training Mode2 are shown in following figures.

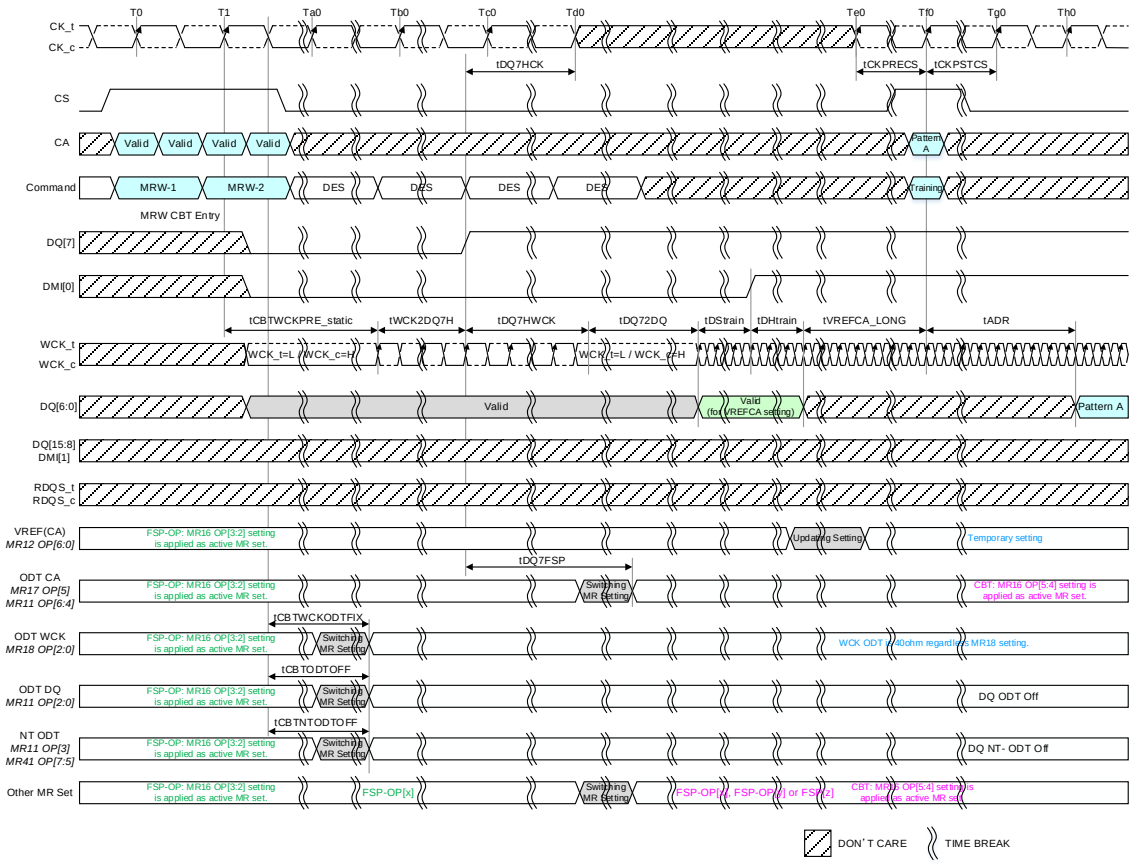


NOTE 1 After tDQ7HCK, clock (CK) can be stopped or frequency changed any time.

NOTE 2 The input clock condition should be satisfied tCKPRECS.

NOTE 3 Continue to drive CK and hold CS pins low until tDQ7HCK after DQ[7] goes HIGH.

NOTE 4 The value of the DQ[6:0] signal level is sampled by the DMI[0] rising edge. The DRAM updates its VREFCA setting of MR12 temporary, after time tVREFCA_long.

NOTE 5 tVREFCA_long may be reduced to tVREFCA_short.

NOTE 6 After DQ[7] is driven HIGH and the SDRAM samples the HIGH level of DQ[7] by WCK toggle in Command Bus Training mode, the SDRAM will switch its FSP-OP registers to use the alternate(i.e. non-active) set. Example: If the SDRAM is currently using FSP-OP[0], then it will switch to FSP-OP[1] when DQ[7] is driven HIGH and sampled HIGH level by WCK toggle. All operating parameters should be written to the alternate mode registers before entering Command Bus Training to ensure that ODT settings, RL/WL/nWR setting, etc., are set to the correct values. If the alternate FSP-OP has ODT CA disabled then termination will not enable in CA Bus Training mode.

NOTE 7 WCK ODT state is set to a fixed value and DQ ODT/NT-ODT are turned off during CBT operation.

NOTE 8 WCK frequency is don't care during CBT operation as far as the frequency is within the allowed range of each frequency mode (MR18 OP[3]). WCK toggle may be stopped during tDQ72DQ and after tDHtrain, but WCK pair should be driven at static levels as WCK_t = Low and WCK_c = High. WCK should toggle to satisfy tWCK2DQ7H and tDStrain before either DQ[7] or DMI[0] changes again.

NOTE 9 The same FSP and clock frequency may be used before and after Command Bus Training entry.

NOTE 10 CBT Phase: MR16 OP[7] = $0_B$

**Figure 33 - Entering Command Bus Training Mode and CA Training Pattern Input with VREF(CA) Value Update (WCK Frequency change)**

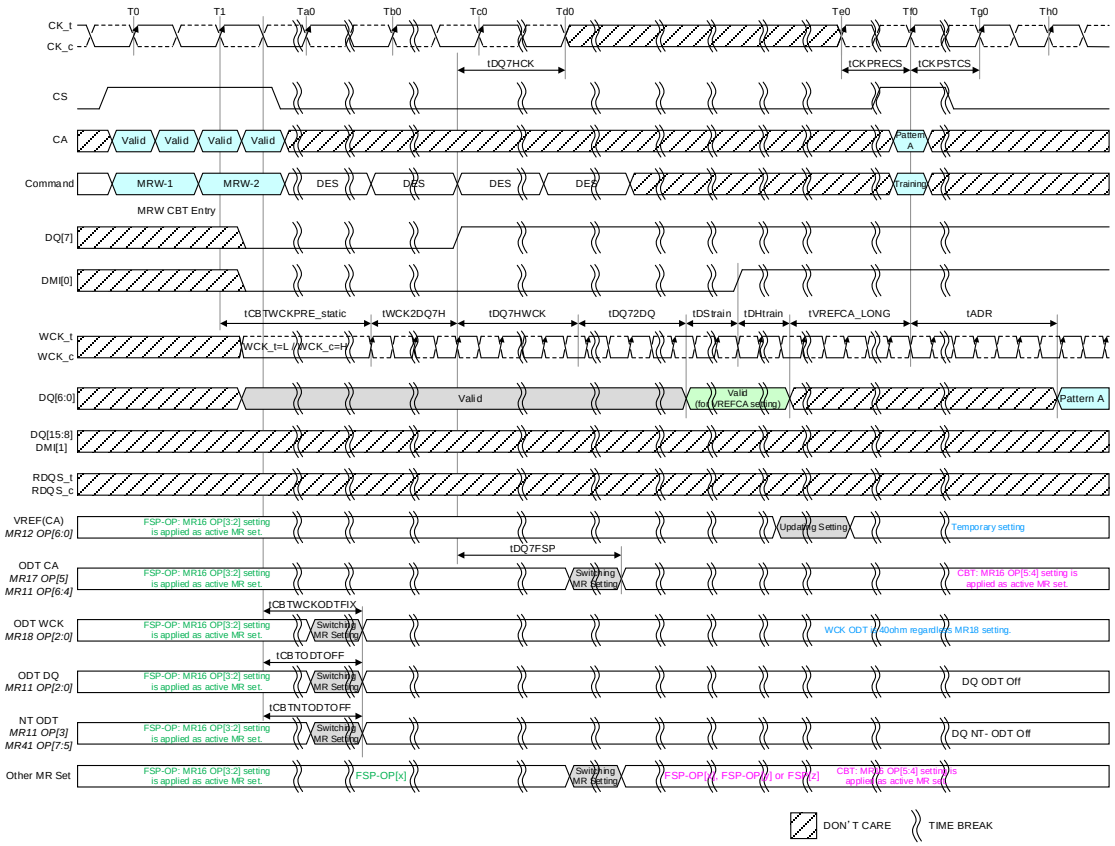


NOTE 1 After tDQ7HCK, clock (CK) can be stopped or frequency changed any time.

NOTE 2 The input clock condition should be satisfied tCKPRECS.

NOTE 3 Continue to drive CK and hold CS pins low until tDQ7HCK after DQ[7] goes HIGH.

NOTE 4 The value of the DQ[6:0] signal level is sampled by the DMI[0] rising edge. The DRAM updates its VREFCA setting of MR12 temporary, after time tVREFCA_long.

NOTE 5 tVREFCA_long may be reduced to tVREFCA_short.

NOTE 6 After DQ[7] is driven HIGH and the SDRAM samples the HIGH level of DQ[7] by WCK toggle in Command Bus Training mode, the SDRAM will switch its FSP-OP registers to use the alternate(i.e. non-active) set. Example: If the SDRAM is currently using FSP-OP[0], then it will switch to FSP-OP[1] when DQ[7] is driven HIGH and sampled HIGH level by WCK toggle. All operating parameters should be written to the alternate mode registers before entering Command Bus Training to ensure that ODT settings, RL/WL/nWR setting, etc., are set to the correct values. If the alternate FSP-OP has ODT CA disabled then termination will not enable in CA Bus Training mode.

NOTE 7 WCK ODT state is set to a fixed value and DQ ODT/NT-ODT are turned off during CBT operation.

NOTE 8 Set fixed WCK frequency during CBT operation regardless of CK:WCK ratio.
WCK frequency is don't care during CBT operation as far as the frequency is within the allowed range of each frequency mode (MR18 OP[3]). WCK toggle may be stopped during tDQ72DQ and after tDHtrain, but WCK pair should be driven at static levels as WCK_t = Low and WCK_c = High. WCK should toggle to satisfy tWCK2DQ7H and tDStrain before either DQ[7] or DMI[0] changes again.

NOTE 9 The same FSP and clock frequency may be used before and after Command Bus Training entry.

NOTE 10 CBT Phase: MR16 OP[7] = $0_B$

**Figure 34 - Entering Command Bus Training Mode and CA Training Pattern Input with VREF(CA) Value Update (Fixed WCK Frequency)**

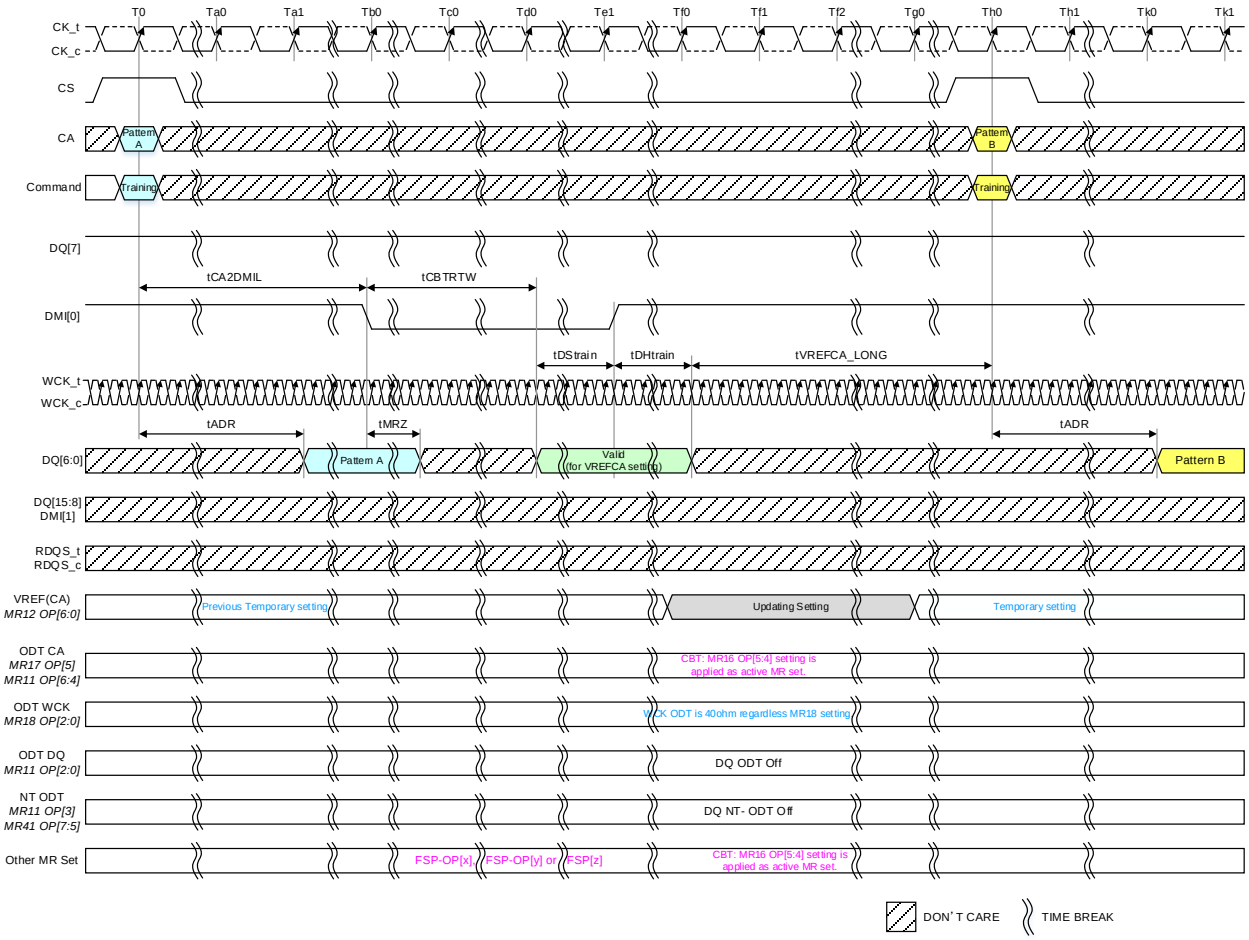


NOTE 1 The value of the DQ[6:0] signal level is sampled by DMI[0] rising edge. The DRAM updates its VREFCA setting of MR12 temporary, after time tVREFCA_long.

NOTE 2 To change read mode to write mode for DQ pins, DMI[0] has to be driven LOW.

NOTE 3 tVREFCA_long may be reduced to tVREFCA_short.

**Figure 35 - CA pattern Input/Output to Vref setting Input**

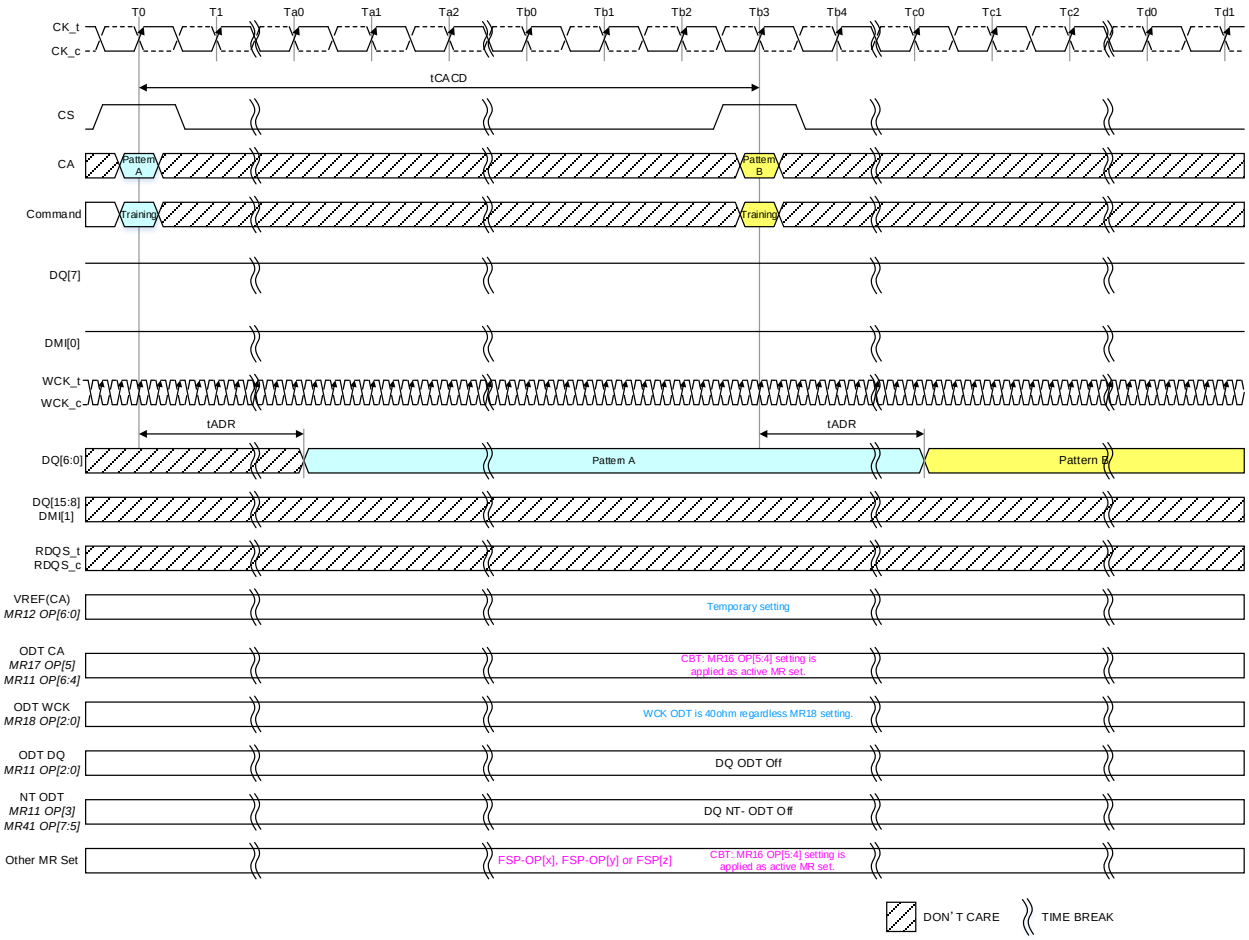


**Figure 36 - Consecutive CA training pattern Input/Output**

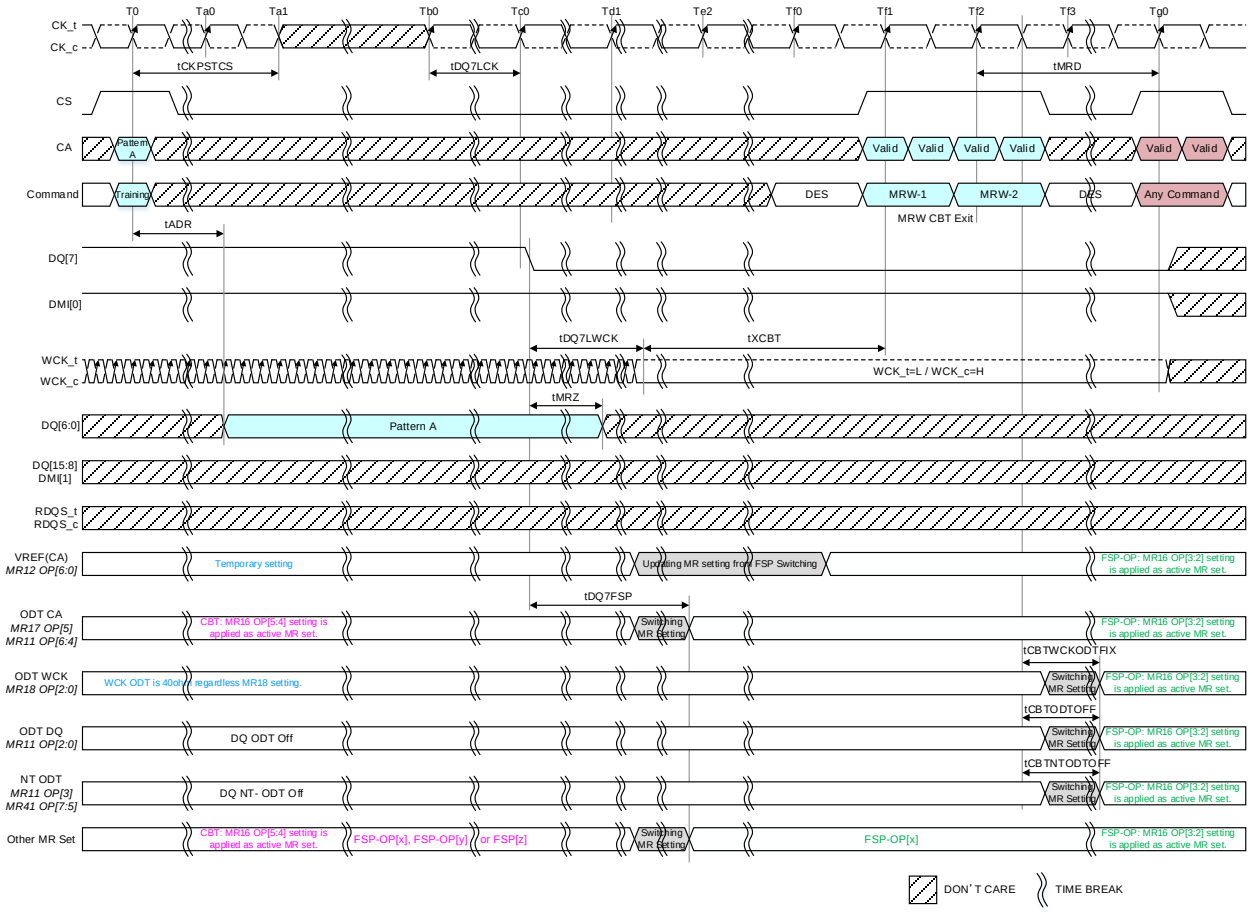


NOTE 1 CK is required to satisfy tDQ7LCK before DQ[7] is driven low.

NOTE 2 DQ[7], DMI[0] and WCK signal are required to be valid level until tMRD which is caused by MRW command to exiting this mode is satisfied.

NOTE 3 After DQ[7] is driven low and the SDRAM samples the LOW level of DQ[7] by WCK toggle, the SDRAM ODT_CA will revert to the state/value defined by FSP-OP prior to Command Bus Training mode entry, i.e. the original frequency set point (FSP-OP).
Example: If the SDRAM was using FSP-OP[x], FSP-OP[y] or FSP-OP[z] for training, then it will switch to FSP-OP[x] after DQ[7] is driven LOW and sampled LOW level by WCK toggle.

NOTE 4 Training values are not retained by the SDRAM, and must be written to the FSP-OP register set before returning to operation at the trained frequency. Example: VREFCA will return to the value programmed in the original set point.

NOTE 5 WCK doesn't need to synchronize with clock signal during CBT mode.

**Figure 37 - Exiting Command Bus Training Mode**

**Table 29 - Command Bus Training AC Timing Table**

| Item | Symbol | Min/ Max | Data Rate (Mbps) | | | | | | | | | | | | Unit | Notes |
|---|---|---|---|---|---|---|---|---|---|---|---|---|---|---|---|---|
| | | | 533 | 1066 | 1600 | 2133 | 2750 | 3200 | 3733 | 4266 | 4800 | 5500 | 6000 | 6400 | | |
| Command Bus Training Timing | | | | | | | | | | | | | | | | |
| Static WCK period (CBT entry to WCK toggling start) | tCBTWCKPRE_static | Min | Max(20ns, 2nCK) | | | | | | | | | | | | ns | |
| Set-up margin between DQ7 and WCK | tWCK2DQ7H | Min | Max(5ns, 12nWCK) | | | | | | | | | | | | ns | |
| Hold margin between DQ7 and WCK | tDQ7HWCK | Min | Max(5ns, 12nWCK) | | | | | | | | | | | | ns | |
| Clock and Command Valid after DQ7 High | tDQ7HCK | Min | Max(5ns, 3nCK) | | | | | | | | | | | | ns | |
| ODT CA change latency after DQ7 High | tDQ7FSP | Max | 20 | | | | | | | | | | | | ns | |
| DQ7 High to valid DQ[6:0] input for VREFCA setting | tDQ72DQ | Min | 250 | | | | | | | | | | | | ns | |
| Valid Clock Requirement before CS High | tCKPRECS | Min | 2tCK + tXP ( tXP = Max(7.5ns, 3nCK)) | | | | | | | | | | | | ns | |
| Valid Clock Requirement after CS High | tCKPSTCS | Min | Max(7.5ns, 3nCK) | | | | | | | | | | | | ns | |
| VREF Step Time – Long | tVREFCA_long | Max | 250 | | | | | | | | | | | | ns | 1 |
| VREF Step Time – Short | tVREFCA_short | Max | 200 | | | | | | | | | | | | ns | 2 |
| Data Setup for Vref Training Mode | tDStrain | Min | Max(5ns, 12nWCK) | | | | | | | | | | | | ns | |
| Data Hold for Vref Training Mode | tDHtrain | Min | Max(5ns, 12nWCK) | | | | | | | | | | | | ns | |
| Asynchronous Data Read | tADR | Max | 20 | | | | | | | | | | | | ns | |
| CBT Command input to DMI Low | tCA2DMIL | Min | 30 | | | | | | | | | | | | ns | |
| DQ<7> Low to DQ driver off | tMRZ | Min | 1.5 | | | | | | | | | | | | ns | |
| DMI Low to Valid DQ input for VREFCA setting | tCBTRTW | Min | Max(20ns, 12nWCK) | | | | | | | | | | | | ns | |
| CA Bus Training Command to CA Bus Training Command delay | tCACD | Min | RU(tADR/tCK) | | | | | | | | | | | | tCK | |
| Valid Clock Requirement before DQ7 Low | tDQ7LCK | Min | Max(5ns, 3nCK) | | | | | | | | | | | | ns | |
| DQ7 Low to static WCK | tDQ7LWCK | Min | Max(5ns, 12nWCK) | | | | | | | | | | | | ns | |
| Exit Command Bus Training Mode to next valid command delay | tXCBT | Min | Max(5nCK, 250ns) | | | | | | | | | | | | ns | |
| Stable time for WCK ODT | tCBTWCKODTFIX | Max | 20 | | | | | | | | | | | | ns | |
| Turned off time for DQ ODT | tCBTODTOFF | Max | 20 | | | | | | | | | | | | ns | |
| Turn off time for NT-ODT | tCBTNTODTOFF | Max | 20 | | | | | | | | | | | | ns | |

NOTE 1 VREFCA_Long is for at least 2 step-size increment/decrement change including up to VREFmin to VREFmax or VREFmax to VREFmin change in VREF voltage.

NOTE 2 VREFCA_short is for a single step-size increment/decrement change in VREF voltage.

#### 4.2.1.5 Command Bus Training Mode2 (FSP with DVFSQ enable)

CBT for DVFSQ enabled operation, follow below steps.
This section will apply to SDRAM which supports DVFSQ function.
The red text is DVFSQ disabled mode, The blue text is DVFSQ enabled mode.

1) Set MR16 OP[1:0] to enable writing to Frequency Set Point “Y” (FSP-WR[y]).
2) Write FSP-WR[y] registers for all channels to set up DVFSQ enabled operating parameters.
3) Disable SoC ODT and set MRW MR17 OP[2:0]=$000_B$.
4) In case of Background ZQ calibration mode, issue MRW MR28 to set ZQ_STOP(MR28 OP[1]=1B) and Wait tZQSTOP.
5) Set to VRCG VREF High Current Mode: MR16 OP[6]=$1_B$ and wait tVRCG Enable
6) Set MR16 OP[5:4] to select CBT mode (CBT[y]) by MRW-1 and MRW-2 commands: Entering CBT mode.
7) Drive DQ[7] HIGH, and then ramp VDDQ down to 0.3V nominal. (Do not TRAIN HERE!) For VDDQ slew rate, VDQSR1, refer to “DVFSQ mode” spec.
8) VREFCA update timing, tVREF_CA_long is required after the VDDQ ramp up is completed.
9) Perform Command Bus Training (VREF(CA), CS and CA).
10) Before the CBT exit, ramp VDDQ up to 0.5V nominal.For VDDQ slew rate, VDQSR1, refer to “DVFSQ mode” spec. Change CK frequency to the FSP[x] frequency operating point prior to driving DQ[7] Low
11) Exit training by driving DQ[7] LOW, When DQ[7] is driven LOW and SDRAM samples the LOW level of DQ[7] by WCK, the SDRAM will automatically switch back to the FSP-OP registers that were in use prior to training (i.e. trained values are not retained by the SDRAM).
12) Wait tXCBT
13) Issue MRW-1 and MRW-2 commands to exit Command Bus Training mode, and to set VRCG VREF High Current mode is disabled as needed
14) Issue ZQ_Stop (set MR28 OP[1]=$0_B$ ) for starting Background ZQ Calibration.
15) Wait tZQCALx and issue ZQCal Latch commands.
16) Write the trained values to FSP-WR[y] by issuing MRW-1 and MRW-2 commands to the SDRAM and setting all applicable mode register parameters.
17) Issue MRW-1 and MRW-2 commands to switch to FSP-OP[y] to turn on termination, and change CK frequency and VDDQ level to the FSP-OP[y] operation point. At this point the Command Bus is trained and other training or normal operation can be executed.

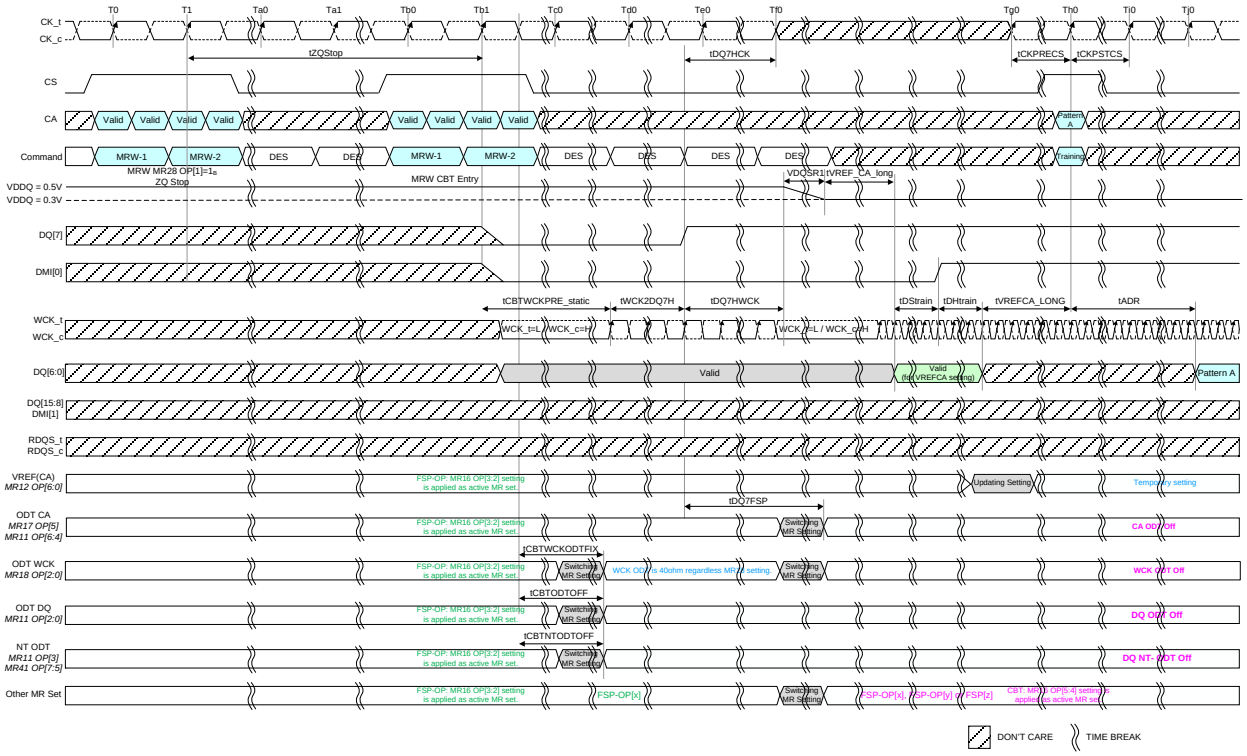


NOTE 1 After tDQ7HCK, clock (CK) can be stopped or frequency changed any time.
NOTE 2 The input clock condition should be satisfied tCKPRECS.
NOTE 3 Continue to drive CK and hold CS pins low until tDQ7HCK after DQ[7] goes HIGH.
NOTE 4 The value of the DQ[6:0] signal level is sampled by the DMI[0] rising edge. The DRAM updates its VREFCA setting of MR12 temporary, after time tVREFCA_long.
NOTE 5 tVREFCA_long may be reduced to tVREFCA_short.
NOTE 6 After DQ[7] is driven HIGH and the SDRAM samples the HIGH level of DQ[7] by WCK toggle in Command Bus Training mode, the SDRAM will switch its FSP-OP registers to use the alternate(i.e. non-active) set. Example: If the SDRAM is currently using FSP-OP[0], then it will switch to FSP-OP[1] when DQ[7] is driven HIGH and sampled HIGH level by WCK toggle. All operating parameters should be written to the alternate mode registers before entering Command Bus Training to ensure that ODT settings, RL/WL/nWR setting, etc., are set to the correct values.
NOTE 7 CA ODT, WCK ODT and DQ ODT/NT-ODT are turned off during CBT with DVFSQ operation.
NOTE 8 During tDQ72DQ, WCK can be stop and changed frequency after FSP change.
NOTE 9 The same FSP and clock frequency may be used before and after Command Bus Training entry.
NOTE 10 CBT Phase: MR16 OP[7] = $0_B$

**Figure 38 - Entering Command Bus Training Mode and CA Training Pattern Input with VREF(CA) Value Update (Background ZQ Calibration)**

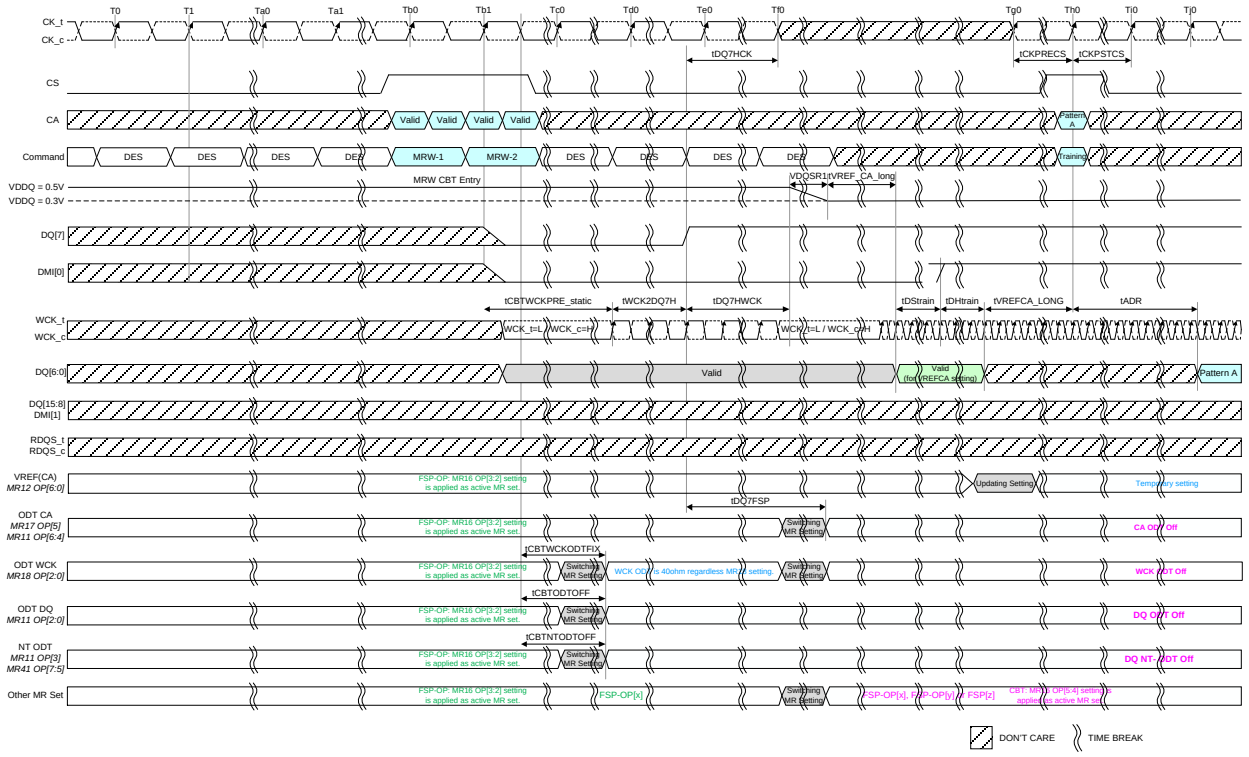


NOTE 1 After tDQ7HCK, clock (CK) can be stopped or frequency changed any time.
NOTE 2 The input clock condition should be satisfied tCKPRECS.
NOTE 3 Continue to drive CK and hold CS pins low until tDQ7HCK after DQ[7] goes HIGH.
NOTE 4 The value of the DQ[6:0] signal level is sampled by the DMI[0] rising edge. The DRAM updates its VREFCA setting of MR12 temporary, after time tVREFCA_long.
NOTE 5 tVREFCA_long may be reduced to tVREFCA_short.
NOTE 6 After DQ[7] is driven HIGH and the SDRAM samples the HIGH level of DQ[7] by WCK toggle in Command Bus Training mode, the SDRAM will switch its FSP-OP registers to use the alternate(i.e. non-active) set. Example: If the SDRAM is currently using FSP-OP[0], then it will switch to FSP-OP[1] when DQ[7] is driven HIGH and sampled HIGH level by WCK toggle. All operating parameters should be written to the alternate mode registers before entering Command Bus Training to ensure that ODT settings, RL/WL/nWR setting, etc., are set to the correct values.
NOTE 7 CA ODT, WCK ODT and DQ ODT/NT-ODT are turned off during CBT with DVFSQ operation.
NOTE 8 During tDQ72DQ, WCK can be stop and changed frequency after FSP change.
NOTE 9 The same FSP and clock frequency may be used before and after Command Bus Training entry.
NOTE 10 CBT Phase: MR16 OP[7] = $0_B$

**Figure 39 - Entering Command Bus Training Mode and CA Training Pattern Input with VREF(CA) Value Update (Command-based ZQ Calibration)**

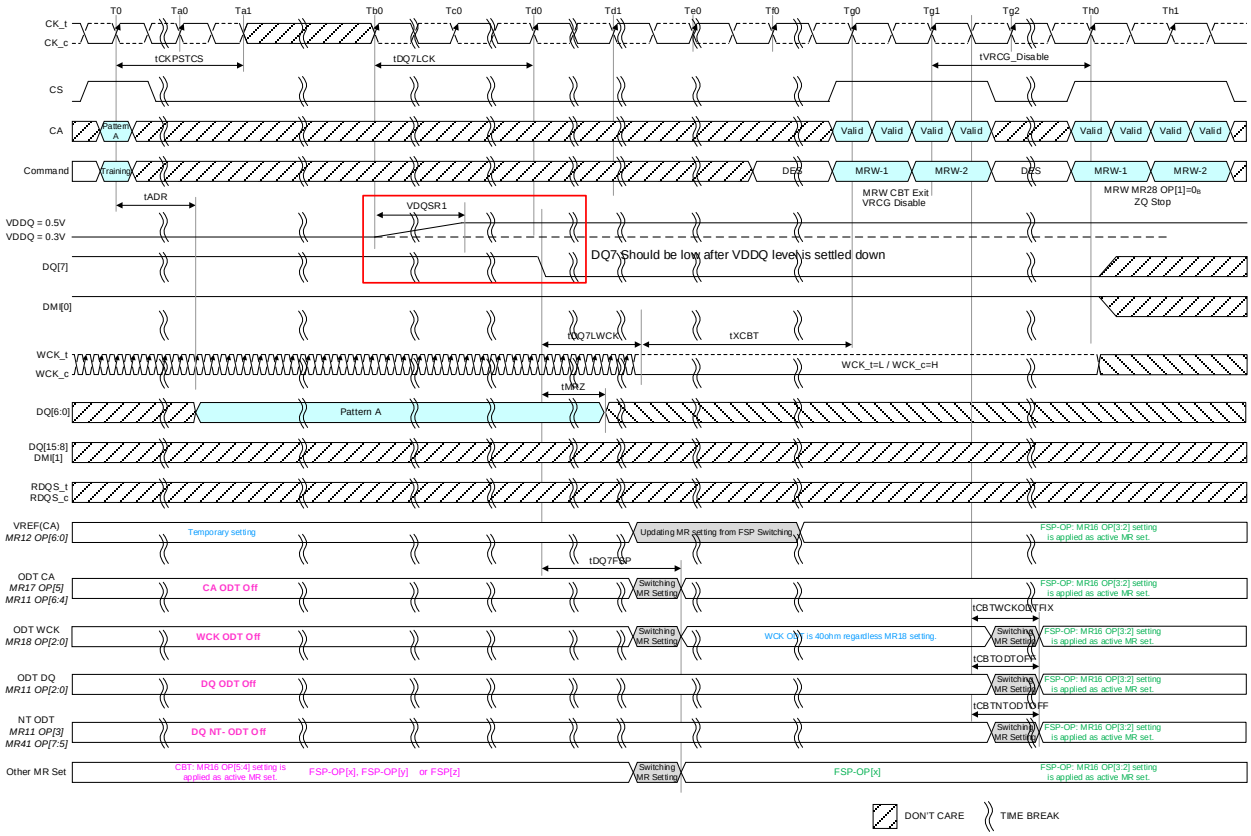


NOTE 1 CK is required to satisfy tDQ7LCK before DQ[7] is driven low.

NOTE 2 DQ[7], DMI[0] and WCK signal are required to be valid level until tMRD which is caused by MRW command to exiting this mode is satisfied.

NOTE 3 After DQ[7] is driven low and the SDRAM samples the LOW level of DQ[7] by WCK toggle, the SDRAM ODT_CA will revert to the state/value defined by FSP-OP prior to Command Bus Training mode entry, i.e. the original frequency set point (FSP-OP).
Example: If the SDRAM was using FSP-OP[x], FSP-OP[y] or FSP-OP[z] for training, then it will switch to FSP-OP[x] after DQ[7] is driven LOW and sampled LOW level by WCK toggle.

NOTE 4 Training values are not retained by the SDRAM, and must be written to the FSP-OP register set before returning to operation at the trained frequency. Example: VREFCA will return to the value programmed in the original set point.

NOTE 5 WCK doesn't need to synchronize with clock signal during CBT mode.

**Figure 40 - Exiting Command Bus Training Mode(Background ZQ Calibration)**

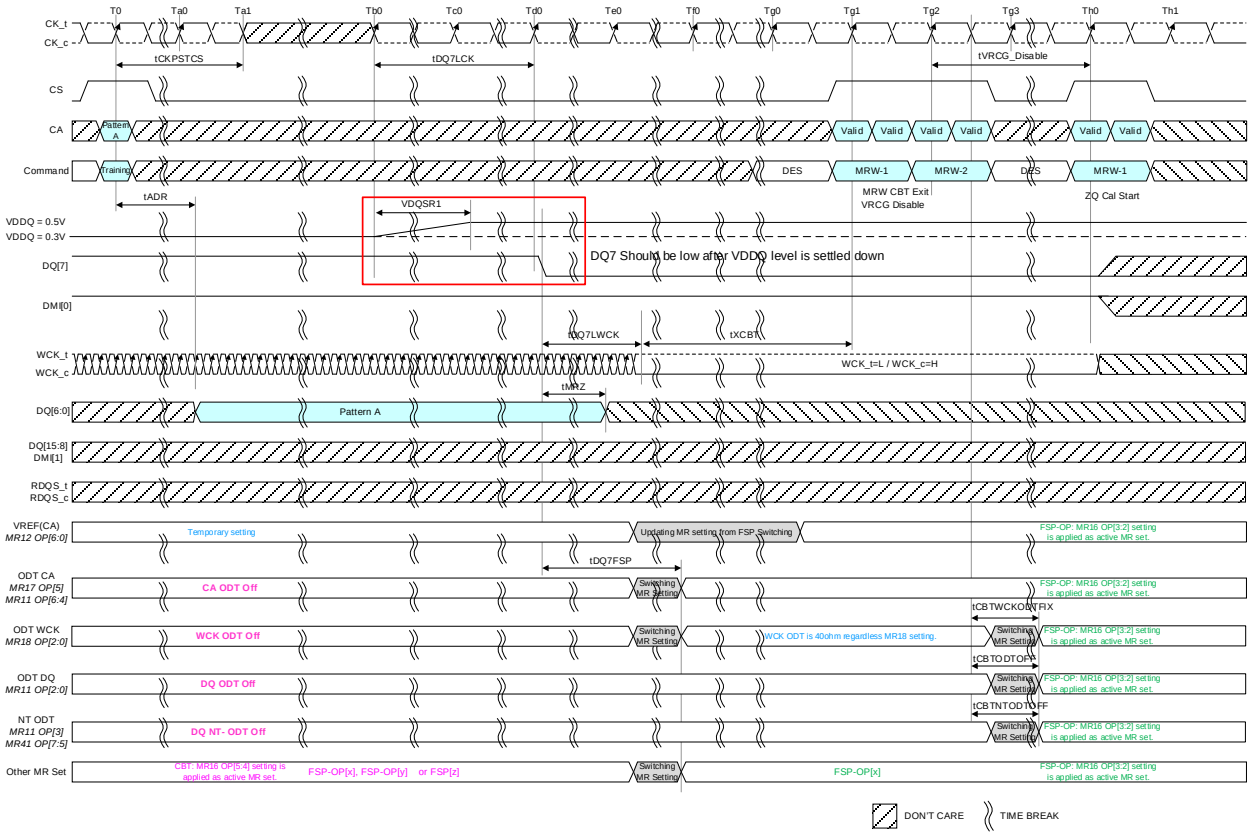


NOTE 1 CK is required to satisfy tDQ7LCK before DQ[7] is driven low.

NOTE 2 DQ[7], DMI[0] and WCK signal are required to be valid level until tMRD which is caused by MRW command to exiting this mode is satisfied.

NOTE 3 After DQ[7] is driven low and the SDRAM samples the LOW level of DQ[7] by WCK toggle, the SDRAM ODT_CA will revert to the state/value defined by FSP-OP prior to Command Bus Training mode entry, i.e. the original frequency set point (FSP-OP).
Example: If the SDRAM was using FSP-OP[x], FSP-OP[y] or FSP-OP[z] for training, then it will switch to FSP-OP[x] after DQ[7] is driven LOW and sampled LOW level by WCK toggle.

NOTE 4 Training values are not retained by the SDRAM, and must be written to the FSP-OP register set before returning to operation at the trained frequency. Example: VREFCA will return to the value programmed in the original set point.

NOTE 5 WCK doesn't need to synchronize with clock signal during CBT mode.

**Figure 41 - Exiting Command Bus Training Mode(Command-based ZQ Calibration)**

### 4.2.2 CA VREF Training

TBD

### 4.2.3 DQ VREF Training

TBD

### 4.2.4 WCK2CK Leveling

#### 4.2.4.1 WCK2CK Leveling Mode (write-leveling called in LPDDR4)

To adjust CK-to-WCK relationship and guarantee WCK2CK-Sync. operation, the LPDDR5 SDRAM provides a WCK2CK Leveling feature to compensate CK-to-WCK timing skew affecting WCK2CK-Sync. operation. The SDRAM compares the phase of the rising edge of WCK and the rising edge of CK, then asynchronously feeds back to the memory controller for the WCK2CK phase detection result. After finishing WCK2CK Leveling, tWCK2CK which means CK-to-WCK relationship is determined and WCK2CK-Sync. operation will be performed with the optimized margin.

The memory controller references WCK2CK-Sync feedback to adjust CK-to-WCK relationship for each WCK_t/WCK_c signal pair. All data bits (DQ[7:0] for WCK_t[0]/WCK_c[0], and DQ[15:8] for WCK_t[1]/WCK_c[1]) carry the training feedback to the controller.
CKR mode is required to be set 2:1 prior to entering WCK2CK leveling.
The LPDDR5 SDRAM enters into WCK2CK Leveling mode when mode register MR18-OP[6] is set HIGH. When WCK2CK Leveling mode is entered, the state of the DQ pins is undefined. During WCK2CK Leveling mode, only DESELECT commands are allowed, or MRW command to exit the WCK2CK Leveling operation. Upon completion of the WCK2CK Leveling, the SDRAM exits from WCK2CK Leveling mode when MR18-OP[6] is reset LOW.
WCK2CK Leveling should be performed before write training.
WCK2CK Leveling examples are shown in **Figure 42** and **Figure 43**, and the specific descriptions for the figures will be provided in the following section.

### 4.2.4.2 WCK2CK Leveling Procedure and Related AC parameters

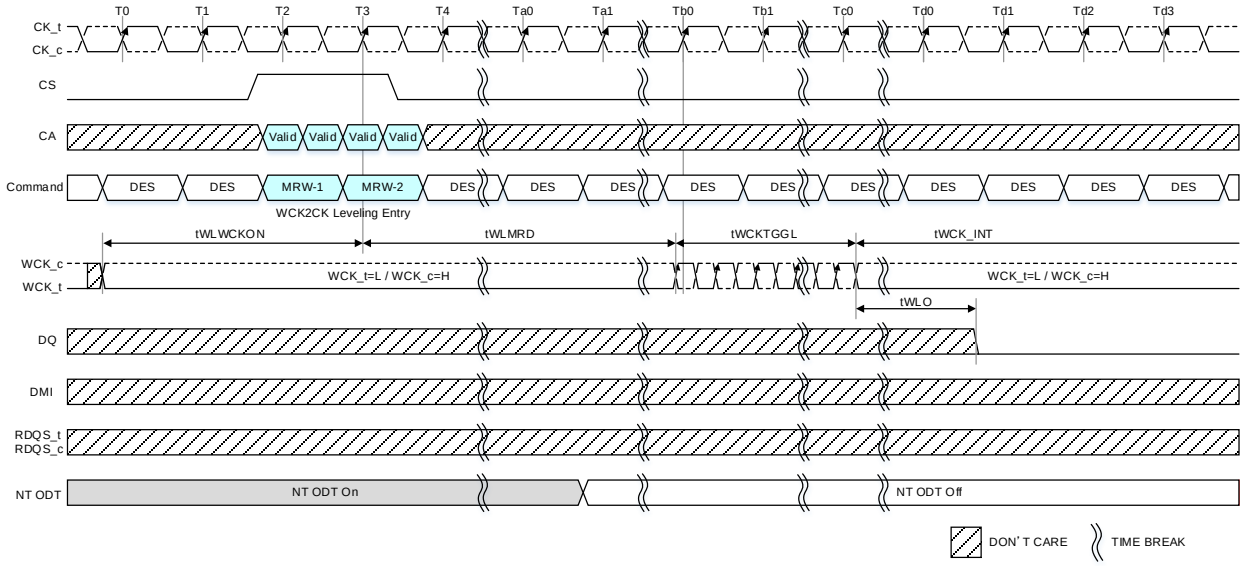


NOTE 1 WCK must be driven tWLWCKON earlier than WCK2CK leveling entry.
NOTE 2 WCK must toggle exactly 7.5 cycles (tWCKTGGL= 7.5tWCK).
NOTE 3 WCK2CK phase detection result on DQ bus is low because WCK phase is earlier than CK phase.
NOTE 4 In this example the NT ODT is enabled.

**Figure 42 - WCK2CK Leveling entry and leveling result output**

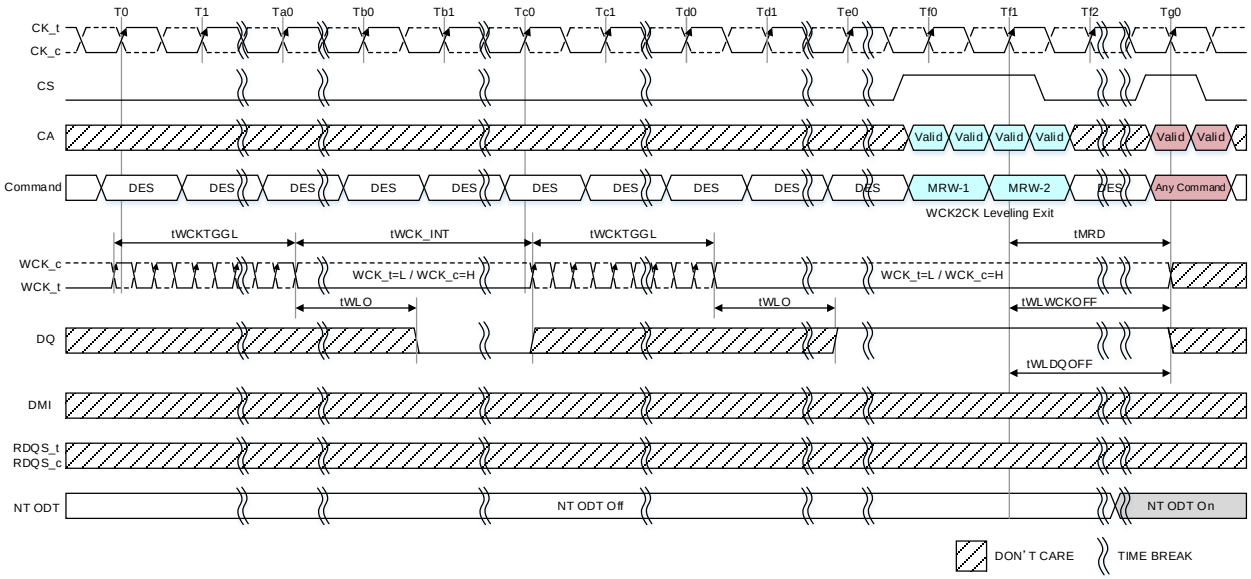


NOTE 1 DQ output transit from low to high when WCK phase starts to be later than CK phase.
NOTE 2 Controller is allowed to change WCK phase only when it is driving WCK_t=L/WCK_c=H.
NOTE 3 WCK must toggle exactly 7.5 cycles (tWCKTGGL=7.5tWCK).
NOTE 4 In this example the NT ODT is enabled.

**Figure 43 - Consecutive WCK2CK Leveling and WCK2CK leveling Exit**

1. Start to drive WCK_t LOW and WCK_c High.
2. Enter into WCK2CK Leveling mode by setting MR18-OP[6]=$1_B$. In WCK2CK leveling mode, the WCK to CK frequency ratio must be 2:1, because the frequency of WCK preamble is 2 times of CK regardless of WCK2CK mode (4:1 or 2:1).
   NT-ODT will be disabled even though NT-ODT is enabled by MR11 OP[3] and MR41 OP[7:5]: NT DQ ODT.
3. Wait for a time tWLMRD before providing the first WCK signal toggle input. The delay time tWLMRD(MAX) is controller dependent.
4. Toggle WCK signal 7.5 cycles for WCK2CK phase detection. SDRAM may or may not capture the first rising edge of WCK_t due to an unstable first rising edge. Hence providing exactly 7.5 cycles of WCK signal input is required in every WCK input signal during WCK2CK training mode.
   SDRAM provides asynchronous feedback of last captured WCK2CK phase information during WCK toggles, on all the DQ bits after time tWLO. DQ output is low if WCK phase is earlier than CK phase and high if WCK phase is later than CK phase. The controller must sample the phase relation result on DQ after satisfying tWLO.
5. The feedback provided by the SDRAM is referenced by the controller to increment or decrement the WCK_t and WCK_c delay setting. The controller can adjust the WCK delay setting only when it drives WCK_t LOW and WCK_c HIGH to prevent any glitches in WCK signal. WCK search range from controller is defined as tWCK2CK_leveling ac parameter. Refer to the tWCK2CK_leveling value in **Table 30**.
6. Repeat step 4 through step 5 until the proper WCK_t/WCK_c delay is established.
7. Exit from WCK2CK Leveling mode by setting MR18-OP[6]=$0_B$.
   NT-ODT will come back to enable if NT-ODT is enabled by MR11 OP[3] and MR41 OP[7:5]: NT DQ ODT.

**Table 30 - WCK2CK Leveling Timing Parameters**

| Parameter | Symbol | Min/ Max | Value | Units | Notes |
|---|---|---|---|---|---|
| WCK_t/WCK_c drive start to WCK2CK leveling mode entry | tWLWCKON | Min | 2 | tCK | |
| First WCK_t/WCK_c edge After WCK2CK leveling mode is programmed | tWLMRD | Min | Max(14ns,5tCK) | ns | |
| Write Leveling output delay | tWLO | Min | 0 | ns | |
| | | Max | Max(2tCK,20ns) | ns | |
| WCK toggle interval | tWCK_INT | Min | Max(25ns, 2.5tWCK) | ns | |
| WCK off delay after write leveling mode exit | tWLWCKOFF | Min | Max(14ns,5tCK) | ns | |
| DQ off delay after write leveling mode exit | tWLDQOFF | Max | Max(14ns,5tCK) | ns | |
| WCK cycle per WCK2CK phase detection | tWCKTGGL | Min | 7.5 | tWCK | 1 |
| | | Max | 7.5 | tWCK | 1 |
| WCK to CK phase offset | tWCK2CK | Min | Max(-0.5*tWCK,-TBDps) | ps | 2 |
| | | | Max(-0.25*tWCK,TBDps) | | 3 |
| | | Max | Min(0.5*tWCK,TBDps) | ps | 2 |
| | | | Min(0.25*tWCK,TBDps) | | 3 |
| WCK2CK leveling phase search range | tWCK2CK_Leveling | Min | Max(-0.5*tWCK,-TBDps) | ps | 4 |
| | | Max | Min(0.5*tWCK,TBDps) | ps | 4 |

NOTE 1 7.5 WCK cycles are required per WCK2CK phase detection.
NOTE 2 Applied when CKR is 4:1 mode(MR18 OP[7]=0).
NOTE 3 Applied when CKR is 2:1 mode(MR18 OP[7]=1).
NOTE 4 SDRAM will return correct tWCK2CK phase relation information in WCK2CK leveling mode within the range specified. However, the maximum WCK to CK phase shift allowed for SDRAM normal operation may be limited by tWCK2CK.

### 4.2.5 Duty Cycle Adjuster (DCA)

LPDDR5 SDRAM supports a mode-register-adjustable WCK DCA to allow the memory controller to adjust the DRAM internal WCK clock tree duty cycle to compensate for systemic duty cycle error. A separate DCA is provided for each byte, (DCAL for the Lower Byte adjustment and DCAU for the Upper Byte adjustment.).

The WCK DCA is located before the WCK divider or equivalent place. The WCK DCA will affect WCK duty cycle during the following operations:

- Read
- Read32
- Write
- Write32
- Masked Write
- Mode Register Read
- Read FIFO
- Write FIFO
- Read DQ Calibration
- Duty Cycle Monitor

The controller can adjust the duty cycle through the MR30 OP[3:0] for DCAL and MR30 OP[7:4] for DCAU setting and can determine the optimal Mode Register setting for DCA in multiple different ways.

This function adjusts the SDRAM internal WCK duty cycle (Static).

#### 4.2.5.1 Duty Cycle Adjuster Range

The step range between the step 0 to 7 (-7) is as follows. The difference of actual value between step N and step N+1 cannot be defined, since the variation of duty cycle by changing DCA code is not linear.

**Table 31 — DCA Range**

| Parameter | Min/Avg./Max | Value | Unit | Notes |
|---|---|---|---|---|
| Duty Cycle Adjuster Range | Min | TBD | ps | 1 |
| | Max | TBD | | |
| NOTE 1 These values are guaranteed by design. | | | | |

**Table 32 — Duty Cycle Adjuster Range**

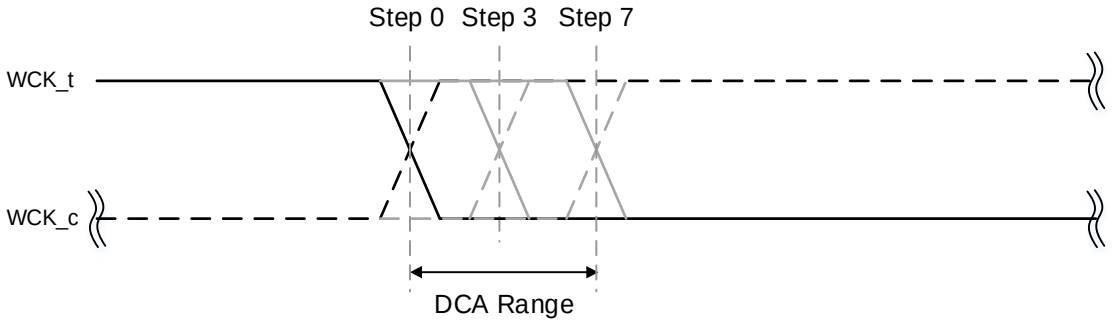

#### 4.2.5.2 Relationship between WCK waveform and DCA Code Change

The basic operation of the DAC code change is as follows.

After DCA code change, it is recommended to re-execute WCK2CK leveling.

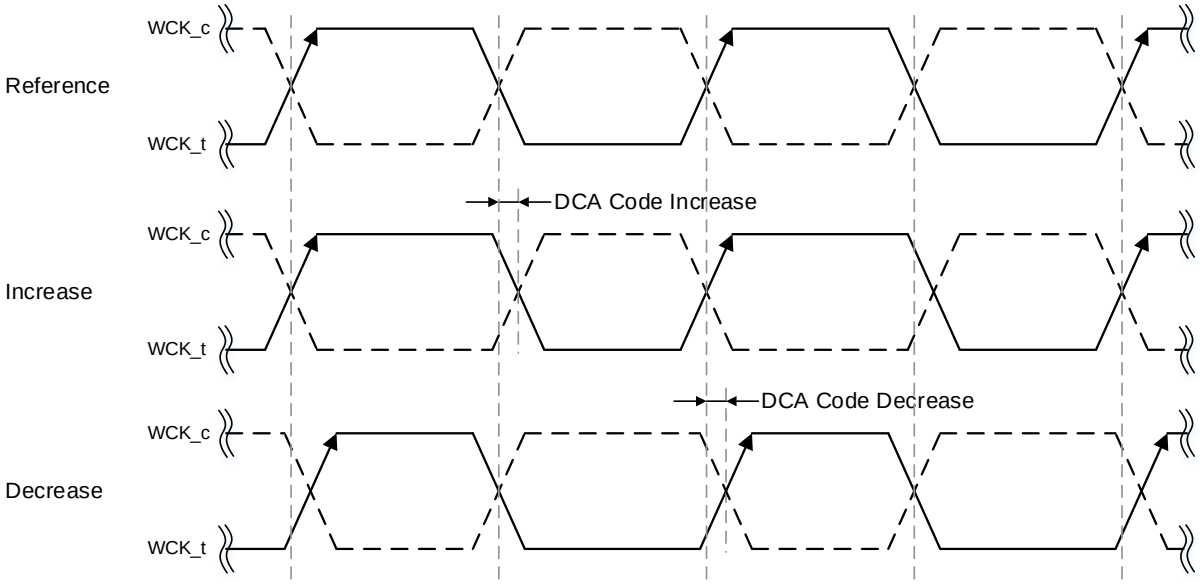


NOTE 1 Refer to the write clock specification section, 15.2, for the definition of tWCKH(avg) and tWCK(avg)

**Figure 44 — Relationship between WCK waveform and DCA Code Change (Example)**

#### 4.2.5.3 The relationship between DCA Code Change and DQ output/RDQS timing

The WCK DCA code change effect to DQ Output and RDQS are as follows. The rising edge of WCK_t affects to the rising edge of RDQS_t and the even data output. The falling edge of WCK_t affects to the falling edge of RDQS_t and the odd data output. The complimentary signal (WCK_c and RDQS_c) is the same as the true signal.

The relationship between the DCA code change and delay time variation (Delay_R/F) only can define in a qualitative manner.

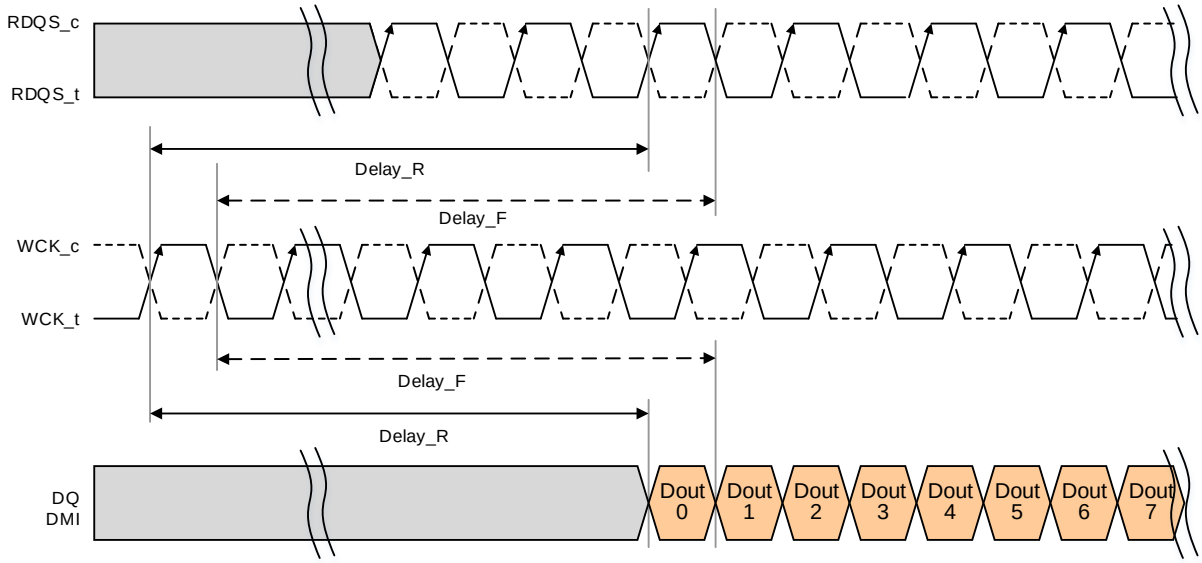


**Figure 45 — Relationship between WCK waveform and DQS_t/c and DQ output (Example)**

### 4.2.6 Duty Cycle Monitor (DCM)

#### 4.2.6.1 DCM Functional Description

LPDDR5 SDRAM devices feature a duty cycle monitor (DCM) to allow the memory controller to monitor WCK duty cycle distortion in the DRAM internal WCK clock tree. Both lower and upper bytes perform the DCM function simultaneously when DCM is enabled. Two separate duty cycle results are provided for each byte: DCML0 and DCML1 for the Lower Byte and DCMU0 and DCMU1 for the Upper Byte.

DCM operation is initiated by writing MR26 OP[0] = 1b. Setting MR26 OP[0] = 0b terminates DCM operation. Prior to initiating DCM operation, WCK2CK SYNC – Fast Sync operation shall be performed in accordance with section 7.2.1 “LPDDR5 WCK2CK Synchronization Operation.” Continuous toggling WCK input is required while DCM operation is enabled until TBD after DCM operation is halted by writing MR26 OP[0] = 0b.

**Table 33 MR26 Register Information (MA[7:0] = $1A_H$)**

| OP[7] | OP[6] | OP[5] | OP[4] | OP[3] | OP[2] | OP[1] | OP[0] |
|---|---|---|---|---|---|---|---|
| RFU | | DCMU1 | DCMU0 | DCML1 | DCML0 | DCM Flip | DCM Start/Stop |

**Table 34 MR26 definition**

| Function | Register Type | Operand | Data | Note |
|---|---|---|---|---|
| Duty cycle result for upper byte when DCM Flip=1 (DCMU1) | Read | OP[5] | 0b: High duty cycle < 50% for upper byte | |
| | | | 1b: High duty cycle > 50% for upper byte | |
| Duty cycle result for upper byte when DCM Flip=0 (DCMU0) | | OP[4] | 0b: High duty cycle < 50% for upper byte | |
| | | | 1b: High duty cycle > 50% for upper byte | |
| Duty cycle result for lower byte when DCM Flip=1 (DCML1) | | OP[3] | 0b: High duty cycle < 50% for lower byte | |
| | | | 1b: High duty cycle > 50% for lower byte | |
| Duty cycle result for lower byte when DCM Flip=0 (DCML0) | | OP[2] | 0b: High duty cycle < 50% for lower byte | |
| | | | 1b: High duty cycle > 50% for lower byte | |
| Flip inputs to cancel offset(DCM_Flip) | Write | OP[1] | 0b: No flip (default) | |
| | | | 1b: Flip | |
| DCM_Start/Stop | | OP[0] | 0b: Stop (default) | |
| | | | 1b: Start | |

DCM results may be inaccurate if DCM circuit hysteresis is present. To increase the accuracy of this function, the DCM supports flipping the input by setting MR26 OP[1] to the opposite state and then repeating the measurement.
MRW[DCM Flip] and MRW[DCM Stop] will capture the DCM results. The DCM result is determined by the state of DCM Flip bit (MR26 OP[1]).

- DCM Flip = 0: DCML0 and DCMU0 will be used
- DCM Flip = 1: DCML1 and DCMU1 will be used

The DCM circuit monitors both read/write WCK clock path. DCM requires higher than 1600MHz WCK.

#### 4.2.6.2 DCM Sequence

DCM training is expected to be done after CBT and WCK2CK Leveling to ensure that MRW and MRR operation can be reliably performed. Below is a DCM sequence that examines the duty cycle of the WCK path:

1. Update the FSP settings.
2. Issue a CAS command with WS_FS=1 to toggle WCK at full-rate before DCM starts.
3. Issue MRW-1 and MRW-2 to start DCM.
4. Wait tDCMM for the DCM to complete duty cycle measurement.
5. Issue MRW-1 and MRW-2 to switch MR26 OP[1] to flip the inputs of DCM.
   5.1. Transitioning the flip bit from a logic low to a logic high will automatically:
      5.1.1. Capture the current DCM results
      5.1.2. Store the DCM results in MR26 OP[2]/MR26 OP[4]
      5.1.3. Reset and restart the DCM
   5.2. Transitioning the flip bit from a logic high to a logic low will automatically:
      5.2.1. Capture the current DCM results
      5.2.2. Store the DCM results in MR26 OP[3]/MR26 OP[5]
      5.2.3. Reset and restart the DCM
6. Wait tDCMM for the DCM to complete duty cycle measurement with the flipped inputs
7. Exit DCM by issuing MRW-1 and MRW-2 to the LPDDR5 SDRAM device.
   7.1. This automatically captures and stores the current DCM results in MR26 OP[2]/MR26 OP[4] when MR26 OP[1] is a logic low.
   7.2. This automatically captures and stores the current DCM results in MR26 OP[3]/MR26 OP[5] when MR26 OP[1] is a logic high.
8. MR26 OP[5:2] can be read out by issuing an MRR after Tf0 using normal MRR timing.

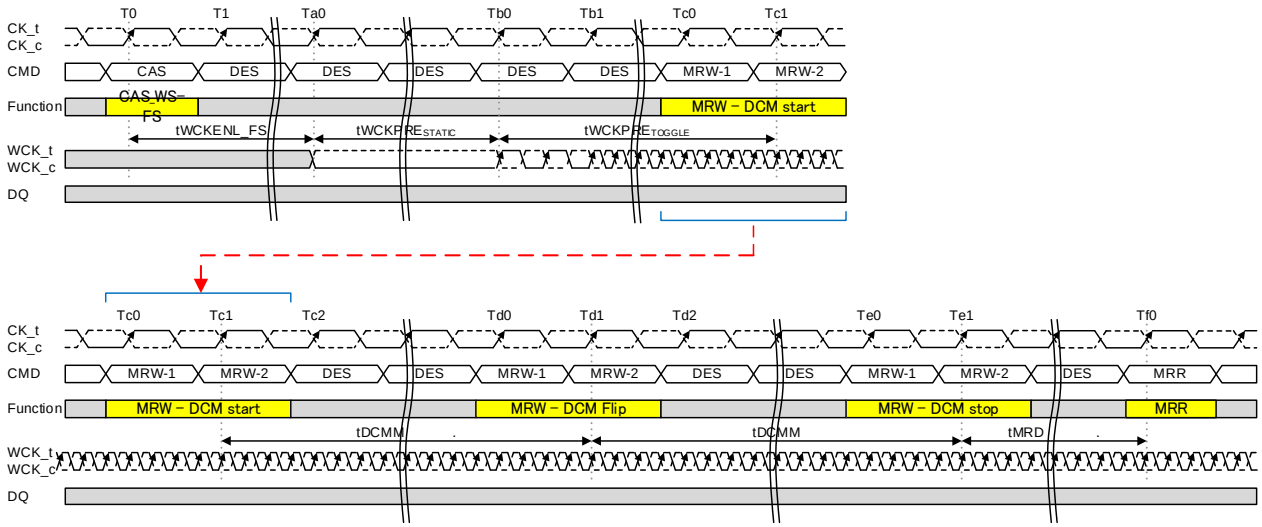


Figure 2: DCM timing example

Following table explains MR26 OP[1] and DQ relationship. MR26 OP[1] don't impact MR26 OP[5:2] output polarity.

**Table 35 DCM output example**

| Comp Output<br>0 :< 50%<br>1 : >= 50% | DCA Code | -7 | -6 | -5 | -4 | -3 | -2 | -1 | 0 | +1 | +2 | +3 | +4 | +5 | +6 | +7 |
|---|---|---|---|---|---|---|---|---|---|---|---|---|---|---|---|---|
| | No Flip | 0 | 0 | 0 | 0 | 0 | 0 | 1 | 1 | 1 | 1 | 1 | 1 | 1 | 1 | 1 |
| | Flip | 0 | 0 | 0 | 0 | 0 | 0 | 0 | 0 | 0 | 1 | 1 | 1 | 1 | 1 | 1 |

**Table 36 Duty cycle monitor timing**

| Parameter | Symbol | Min/ Max | WCK Frequency (MHz) | | | | | | | Unit | Note |
|---|---|---|---|---|---|---|---|---|---|---|---|
| | | | 1600 | 1867 | 2134 | 2400 | 2750 | 3000 | 3200 | | |
| Duty Cycle Monitor Measurement time | tDCMM | MIN | 2 | | | | | | | us | |

### 4.2.7 READ DQ Calibration

The LPDDR5 SDRAM devices feature a READ DQ Calibration training function that outputs a 16-bit user-defined pattern on the DQ pins. READ DQ Calibration is initiated by issuing a READ DQ CALIBRATION (RDC) command, cause the LPDDR5 SDRAM to drive the contents of MR33 followed by the contents of MR34 on each of DQ[15:0] and DMI[1:0]. The pattern can be either inverted or low-fixed on selected DQ pins according to user-defined invert masks or output data fix0 written to MR31 and MR32. The selection of either inverted or low-fixed is decided based on MR20.

#### 4.2.7.1 READ DQ Calibration Training Procedure

The procedure for executing READ DQ Calibration is:

- Issue MRW commands to write MR33 (first eight bits), MR34 (second eight bits), MR20 (selection of either inverted or output fix0), MR31/32 (eight-bit invert mask or output data fix0 for byte0/1).
  - Optionally this step could be skipped to use the default patterns.
    - MR31 default = $55_H$
    - MR32 default = $55_H$
    - MR33 default = $5A_H$
    - MR34 default = $3C_H$

- RD DQ Calibration is initiated by issuing Read DQ Calibration (RDC) command while in a WCK2CK SYNC state.
  - Each time an RDC command is received by the LPDDR5 SDRAM, a 16-bit data burst will, after the currently set RL, drive the eight bits programmed in MR33 followed by the eight bits programmed in MR34 on all I/O pins. CAS command (WS_RD = 1) is not required as long as WCK2CK-sync state is kept.
  - When MR20 OP[7] = 0, the data pattern will be inverted for I/O pins with a '1' programmed in the corresponding invert mask mode register bit.
  - When MR20 OP[7] = 1, the data pattern will be low-fixed for IO pins with a '1' programmed in the corresponding output data fix0 mode register bit (see Table 37 and Table 38). The DMI pattern will be low-fixed when MR20 OP[6] = 1.
  - Note that the pattern is driven on the DMI pins, but no data bus inversion function is enabled, even if Read DBI is enabled in the DRAM mode register.
  - The RDC command can be issued every tCCD seamlessly, and tRTRRD delay is required between Array Read command and the RDC command as well the delay required between the RDC command and an array read.
  - The operands received with the CAS command must be driven LOW except WS_RD.
  - The function set by previous CAS operands is ignored. (DC0~3 and B3 are ignored.)

- DQ Read Training can be performed with any or no banks active, during Refresh, or during SREF without Power Down.

- In case of byte mode, MR31 is valid only for lower byte selected device, and MR32 is valid only for upper byte selected device.

### 4.2.8.1 READ DQ Calibration Training Procedure (Cont'd)

**Table 37 — Invert Mask or output data fix0 Assignments in X16 Mode**

| DQ Pin | Pattern selects MR20 OP[7] | OP0 | OP1 | OP2 | OP3 | OP4 | OP5 | OP6 | OP7 |
|---|---|---|---|---|---|---|---|---|---|
| MR31 | 0 | DQ0 invert | DQ1 invert | DQ2 invert | DQ3 invert | DQ4 invert | DQ5 invert | DQ6 invert | DQ7 invert |
| | 1 | DQ0 Fix0 | DQ1 Fix0 | DQ2 Fix0 | DQ3 Fix0 | DQ4 Fix0 | DQ5 Fix0 | DQ6 Fix0 | DQ7 Fix0 |
| MR32 | 0 | DQ8 invert | DQ9 invert | DQ10 invert | DQ11 invert | DQ12 invert | DQ13 invert | DQ14 invert | DQ15 invert |
| | 1 | DQ8 Fix0 | DQ9 Fix0 | DQ10 Fix0 | DQ11 Fix0 | DQ12 Fix0 | DQ13 Fix0 | DQ14 Fix0 | DQ15 Fix0 |

**Table 38 — Invert Mask or output data fix0 Assignments in X8 Mode**

| DQ Pin | Pattern select MR20 OP[7] | OP0 | OP1 | OP2 | OP3 | OP4 | OP5 | OP6 | OP7 |
|---|---|---|---|---|---|---|---|---|---|
| MR31 | 0 | DQ0 invert | DQ1 invert | DQ2 invert | DQ3 invert | DQ4 invert | DQ5 invert | DQ6 invert | DQ7 invert |
| | 1 | DQ0 Fix0 | DQ1 Fix0 | DQ2 Fix0 | DQ3 Fix0 | DQ4 Fix0 | DQ5 Fix0 | DQ6 Fix0 | DQ7 Fix0 |

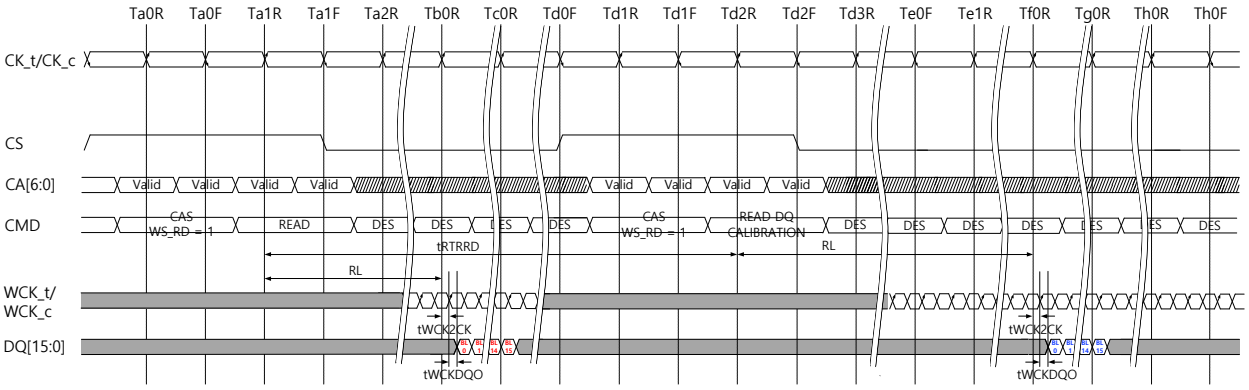


NOTES - 1. READ to READ DQ CALIBRATION operation is shown as an example of command to command timing. Timing from READ to READ DQ CALIBRATION is tRTRRD.
2. READ DQ CALIBRATION uses the same command to data timing relationship as READ command.
3. If WCK_t/WCK_c have been Hi-Z state prior to issuing READ DQ CALIBRATION command, WCK2CK Sync operation must be executed. READ DQ CALIBRATION uses the same timing relationship with the WCK2CK Sync operation as READ command.
4. BL=16.
5. DES commands are shown for ease of illustration; other commands may be valid at these times.

**Figure 46 — Read DQ Calibration Timing: Read to Read DQ Calibration**

### 4.2.8.1 READ DQ Calibration Training Procedure (Cont'd)

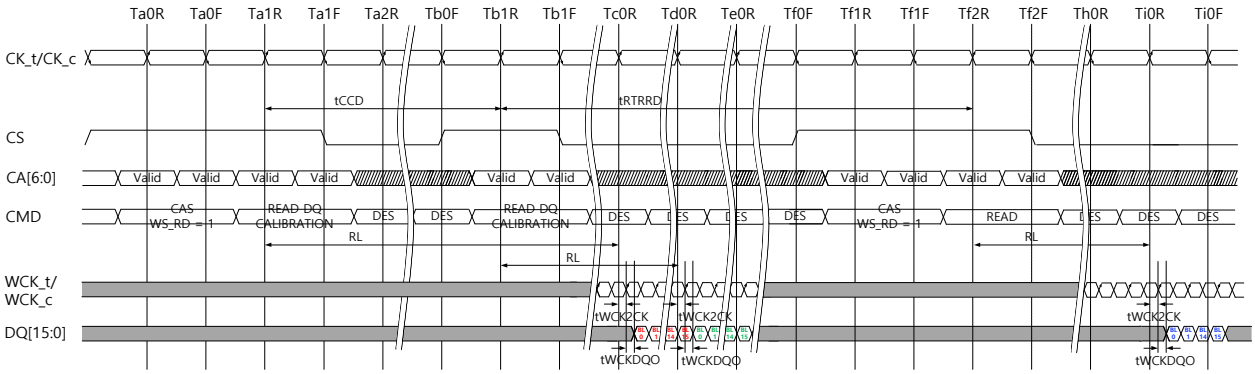


NOTES - 1. READ DQ CALIBRATION to READ DQ CALIBRATION operation is shown as an example of command to command timing. Seamless READ DQ CALIBRATION commands may be executed by repeating the command every tCCD time.
2. READ DQ CALIBRATION to READ operation is shown as an example of command to command timing. Timing from READ DQ CALIBRATION to READ is tRTRRD.
3. READ DQ CALIBRATION uses the same command to data timing relationship as READ command.
4. If WCK_t/WCK_c have been Hi-Z state prior to issuing READ DQ CALIBRATION command, WCK2CK Sync operation must be executed. READ DQ CALIBRATION uses the same timing relationship with the WCK2CK Sync operation as READ command.
5. BL=16.
6. DES commands are shown for ease of illustration; other commands may be valid at these times.

**Figure 47 — Read DQ Calibration Timing: Read DQ Calibration to Read DQ Calibration**

### 4.2.7.2 READ DQ Calibration Example

An example of READ DQ Calibration Training output is shown in Table 39 and Table 40. This shows the 16-bit data pattern that will be driven on each DQ when one READ DQ CALIBRATION command is executed. This output assumes the following mode register values are used.

- MR31 default = $55_H$
- MR32 default = $55_H$
- MR33 default = $1C_H$
- MR34 default = $59_H$

**Table 39 — Read DQ Calibration Bit Ordering, Inversion, output data fix0 example for DQ**

| PIN | MR20 OP[7] | DQ Invert | DQ output Data fix0 | Bit Sequence | | | | | | | | | | | | | | | |
|---|---|---|---|---|---|---|---|---|---|---|---|---|---|---|---|---|---|---|---|
| | | | | 15 | 14 | 13 | 12 | 11 | 10 | 9 | 8 | 7 | 6 | 5 | 4 | 3 | 2 | 1 | 0 |
| DQx | 0 | Yes | - | 1 | 0 | 1 | 0 | 0 | 1 | 1 | 0 | 1 | 1 | 1 | 0 | 0 | 0 | 1 | 1 |
| | | No | - | 0 | 1 | 0 | 1 | 1 | 0 | 0 | 1 | 0 | 0 | 0 | 1 | 1 | 1 | 0 | 0 |
| | 1 | - | Yes | 0 | 0 | 0 | 0 | 0 | 0 | 0 | 0 | 0 | 0 | 0 | 0 | 0 | 0 | 0 | 0 |
| | | - | No | 0 | 1 | 0 | 1 | 1 | 0 | 0 | 1 | 0 | 0 | 0 | 1 | 1 | 1 | 0 | 0 |

### 4.2.8.2 READ DQ Calibration Example (Cont'd)

**Table 40 — Read DQ Calibration Bit Ordering, Inversion, output data fix0 example for DMI**

| PIN | MR 20 OP [6] | DMI output Data fix0 | Bit Sequence → | | | | | | | | | | | | | | | |
|---|---|---|---|---|---|---|---|---|---|---|---|---|---|---|---|---|---|---|
| | | | 15 | 14 | 13 | 12 | 11 | 10 | 9 | 8 | 7 | 6 | 5 | 4 | 3 | 2 | 1 | 0 |
| DMI | 0 | No | 0 | 1 | 0 | 1 | 1 | 0 | 0 | 1 | 0 | 0 | 0 | 1 | 1 | 1 | 0 | 0 |
| | 1 | Yes | 0 | 0 | 0 | 0 | 0 | 0 | 0 | 0 | 0 | 0 | 0 | 0 | 0 | 0 | 0 | 0 |

NOTE 1 The patterns contained in MR33 and MR34 are transmitted on DQ[15:0] and DMI[1:0] when READ DQ Calibration is initiated by a READ DQ CALIBRATION command. The pattern transmitted serially on each data lane, organized that the low-order bit in a byte is transmitted first. If the data pattern is $27_H$, then the first bit transmitted will be a '1', followed by '1', '1', '0', '0', '1', '0', and '0'. The bit stream will be 00100111(→).

NOTE 2 MR31 and MR32 may be used to invert the MR33/ MR34 data pattern on the DQ pins. See MR31 (Table 125) and MR32 (Table 128) for more information. There is no inversion function for DMI[1:0] pin data streams.

NOTE 3 No Data Bus Inversion (DBI) function is enacted during READ DQ CALIBRATION, even if DBI is enabled.

### 4.2.7.3 READ DQ Calibration after Power Down Exit

Following the power down state, an additional time, tMRRI, is required prior to issuing the READ DQ CALIBRATION command. This additional time (equivalent to tRCD) is required in order to be able to maximize power down current savings by allowing more power-up time for the Read DQ data in MR33 and MR34 data path after exit from standby, power down mode.

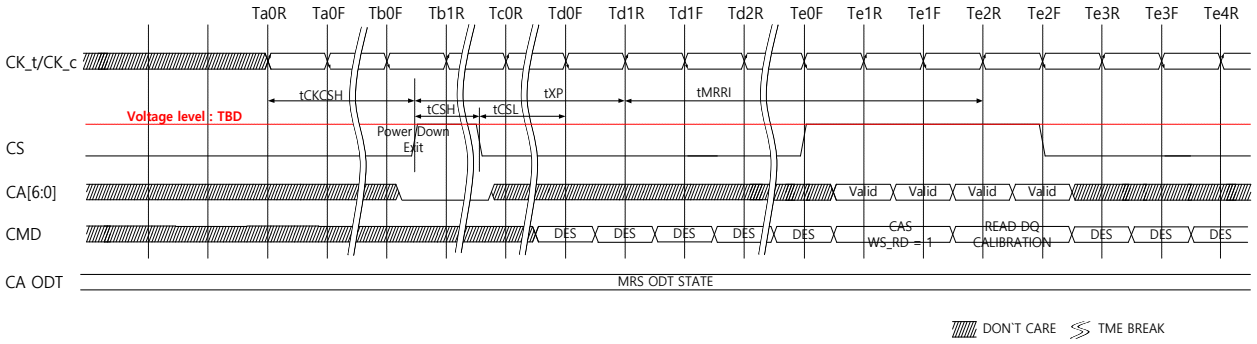


**Figure 48 — READ DQ CALIBRATION following Power Down State**

#### 4.2.7.4 DMI Behavior Control for RDC

LPDDR5 SDRAM supports DMI output behavior control at Read DQ Calibration Command as optional function. MR0 OP[4] indicates whether DMI output behavior control is supported or not. If MR0 OP[4]=$1_B$, DMI input/output behavior control mode can be selected MR13 OP[4].

- MR0 OP[4]=$0_B$
  Only mode 1 is supported.
- MR0 OP[4]=$1_B$
  Mode 1 and Mode 2 can be selectable.

The outline of Mode 1 and Mode 2.

- Mode1: MR13 OP[4]=$0_B$
  DMI Output behavior follows MR setting Read DBI, Read Link ECC and Read Data Copy.
- Mode 2: MR13 OP[4]=$1_B$
  DMI outputs a valid data, if Read FIFO Command and Read DQ Calibration Command is issued when Data Mask and/or Write DBI are enabled even though Read DBI, Read Link ECC and Read Data Copy are disabled.

##### 4.2.7.4.1.1 DMI Output Behavior Mode 1

**Table 41 - DMI Output behavior and Read Latencies for Read DQ Cal. command**

| Function | | | DMI Output Behavior | Read Latencies | | Note |
|---|---|---|---|---|---|---|
| Read DBI MR3 OP[6] | Read Link ECC MR22 OP[7:6] | Read Data Copy MR21 OP[5] | | x16 | x8 | |
| Disable | Disable | Disable | Driver is turned off | Set 0 | Set 1 | 1 |
| Disable | Disable | Enable | RDC Data Output | Set 1 | Set 2 | 1 |
| Disable | Enable | Disable | RDC Data Output | Set 0 | Set 1 | 2 |
| Disable | Enable | Enable | Prohibited setting | N/A | N/A | |
| Enable | Disable | Disable | RDC Data Output | Set 1 | Set 2 | 1 |
| Enable | Disable | Enable | RDC Data Output | Set 1 | Set 2 | 1 |
| Enable | Enable | Disable | Prohibited setting | N/A | N/A | |
| Enable | Enable | Enable | Prohibited setting | N/A | N/A | |

NOTE 1 For Read latency set, refer to the table where Read Link ECC function is disabled.
NOTE 2 For Read latency set, refer to the table where Read Link ECC function is enabled.

#### 4.2.7.4.1.2 DMI Output Behavior Mode 2

**Table 42 - Relationship between MR setting and DMI behavior for RDC command**

| Function | | | | | DMI Output Behavior | Read Latency | | Notes |
|---|---|---|---|---|---|---|---|---|
| Data Mask MR13 OP[5] | Write DBI MR3 OP[7] | Read DBI MR3 OP[6] | Read Link ECC MR22 OP[7:6] | Read Data Copy MR21 OP[5] | Read DQ Cal. Command | x16 | x8 | |
| Disable | Disable | Disable | Disable | Disable | Driver is turned off | Set 0 | Set 1 | 1 |
| Disable | Enable | Disable | Disable | Disable | RDC Data output | Set 0 | Set 1 | 1 |
| Enable | Disable | Disable | Disable | Disable | RDC Data output | Set 0 | Set 1 | 1 |
| Enable | Enable | Disable | Disable | Disable | RDC Data output | Set 0 | Set 1 | 1 |

NOTE 1 For Read latency set, refer to the table where Read Link ECC function is disabled.
NOTE 2 See DMI pin behavior table for the rest of MR combination.

### 4.2.8 WCK-DQ Training

The LPDDR5 SDRAM uses an un-matched WCK-DQ path to enable high speed performance and save power in the SDRAM. As a result, WCK is required to be trained to arrive at the DQ latch center-aligned with the Data eye. The SDRAM DQ receiver is located at the DQ pad, and has a shorter internal delay in the SDRAM than does the WCK signal. The SDRAM DQ receiver will latch the data present on the DQ bus when WCK reaches the latch, and training is accomplished by delaying the DQ signals relative to WCK such that the Data eye arrives at the receiver latch centered on the WCK transition.
The LPDDR5 SDRAM provides a Command-based FIFO Write/Read training operation using user specific pattern. Basically, DMI will be treated the same as DQs. It means that the Write Data send to FIFO for DMI by WFF command and these data can be read-out from FIFO for DMI by RFF command. On the other hands, DMI behavior is not same as DQs in some cases. Refer to the details about the special DMI behavior which are to be described later in this section.

#### 4.2.8.1 Training procedure

To perform Write Training, the controller is required to be issued the CAS command with WS_WR=1 followed immediately by the Write FIFO command to write data into the FIFO. Timing for the CAS and the Write FIFO command are identical to the CAS and the Write command. Up to 8 consecutive Write FIFO commands with user defined patterns may be issued to the SDRAM to store up to 128 values (BL16 x 8) per pin that can be read back via the Read FIFO command.
The burst length of the Write FIFO and the Read FIFO command is limited to BL16 regardless Bank architecture: BG, 16B and 8B mode.
The Write/Read FIFO Pointer operation is described later in this section.

After writing data to the SDRAM with the Write FIFO command, the data can be read back with the Read FIFO command and results compared with “expect” data to see if further training is needed. To read back the data, the controller is required to issue a CAS command with WS_RD=1 followed immediately by the Read FIFO command to read back data from FIFO. Timing for the CAS and the Read FIFO command are identical to the CAS and the Read command.

The Read FIFO operation is non-destructive to the data captured in the FIFO, so data may be read continuously until it is overwritten by the Write FIFO command. For example: If 8 Write FIFO commands are executed sequentially, then a series of Read FIFO commands will read valid data from FIFO[0], FIFO[1]….FIFO[7], and will then wrap back to FIFO[0] on the next Read FIFO. If fewer than 8 Write FIFO commands were executed, then unwritten registers will have un-defined (but valid) data when read back. For instance, if fewer than 8 Write FIFO commands are executed sequentially (example=3), then a series of Read FIFO commands will return valid data for FIFO[0], FIFO[1], and FIFO[2], however the next (8-3) Read FIFO commands will return un-defined data for FIFO[3] through FIFO[7] before wrapping back to the valid data in FIFO[0].

During WCK-DQ Training, only the following commands are allowed to prevent an overwrite of the Write and Read FIFO and to simplify this training procedure.

- CAS_WR, CAS_RD, CAS_FS and CAS_OFF
- Read FIFO
- Write FIFO
- DES
- NOP

- Refresh (All bank and Per bank)
- Mode Register Write for FSP-WR: MR16 OP[1:0], FSP-OP: MR16 OP[3:2] and VRCG: MR16 OP[6].

WCK-DQ Training can be started at Idle, Bank active, during refresh or Self Refresh of the SDRAM. WCK-DQ Training can be ended when the FIFO pointer is the same value between Write and Read FIFO.

#### 4.2.8.1.1 Relationship between MR setting and FIFO training behavior

Write FIFO and the Read FIFO command can be issued regardless of following MR setting.

- MR13 OP[5]: Data Mask
- MR3 OP[7]: Write DBI
- MR22 OP[5:4]: Write Link ECC
- MR3 OP[6]: Read DBI
- MR22 OP[7:6]: Read Link ECC
- MR21 OP[5]: Read Data Copy

However, above-mentioned MR setting affects Read Latencies, and/or DMI pin behavior. Refer to **Table 43** for detail.

**Table 43 - Relationship between MR setting and FIFO behavior**

| Subject | x16 Device | x8 Device | Note |
|---|---|---|---|
| MR13 OP[5]: Data Mask | Function Disable | Function Disable | 1 |
| MR3 OP[7]: Write DBI | Function Disable | Function Disable | 2 |
| MR22 OP[5:4]: Write Link ECC | Function Disable | Function Disable | 3 |
| MR3 OP[6]: Read DBI | Function Disable | Function Disable | 4 |
| MR22 OP[7:6]: Read Link ECC | Function Disable | Function Disable | 5 |
| MR21 OP[5]: Read Data Copy | Function Disable | Function Disable | 6 |
| Read Latency | Follow MR setting | Follow MR setting | 7 |
| | Follow DVFSC setting | Follow DVFSC setting | |

NOTE 1 Input data from DMI does not affect the input data to DQs, if MR13 OP[5]=$0_B$.
NOTE 2 Input data from DMI does not affect the input data to DQs, if MR3 OP[7]=$1_B$.
NOTE 3 Input data from RDQS_t and errors on Write FIFO commands will be ignored, if MR22 OP[5:4]=$01_B$.
NOTE 4: The data written in the FIFO of DMI is output as it is regardless of MR3 OP[6] setting.
NOTE 5 The data written in the FIFO of DMI is output as it is regardless of MR22 OP[7:6] setting.
NOTE 6 The data written in the FIFO of DQs and DMI is output as it is regardless of MR21 OP[5] setting.
NOTE 7 Read Latency is affected by the following MR setting.
- MR3 OP[6]: Read DBI, MR21 OP[5]: Read Data Copy and MR22 OP[7:6]: Read Link ECC.

NOTE 8 The states defined the table is also applies when WCK-RDQS_t/Parity Training: MR46 OP[2]=$1_B$. Note 8 applies whole row of this table.

**Table 44 DMI, RDQS_t/Parity Input behavior for Write FIFO command**

| Function | | | | DMI Input Behavior | RDQS_t/ Parity Receiver | Note |
|---|---|---|---|---|---|---|
| Data Mask MR13 OP[5] | Write DBI MR3 OP[7] | Write Link ECC MR22 OP[5:4] | Write Data Copy MR21 OP[4] | | | |
| Disable | Disable | Disable | Disable | Not in use, don't care | Turn off | |
| Disable | Disable | Disable | Enable | Not in use, don't care | Turn off | 1 |
| Disable | Disable | Enable | Disable | Not in use, don't care | Turn on | 2 |
| Disable | Disable | Enable | Enable | Not in use, don't care | Turn on | 1,2 |
| Disable | Enable | Disable | Disable | FIFO Data Input | Turn off | |
| Disable | Enable | Disable | Enable | FIFO Data Input | Turn off | 1 |
| Disable | Enable | Enable | Disable | FIFO Data Input | Turn on | 2 |
| Disable | Enable | Enable | Enable | FIFO Data Input | Turn on | 1,2 |
| Enable | Disable | Disable | Disable | FIFO Data Input | Turn off | |
| Enable | Disable | Disable | Enable | FIFO Data Input | Turn off | 1 |
| Enable | Disable | Enable | Disable | FIFO Data Input | Turn on | 2 |
| Enable | Disable | Enable | Enable | FIFO Data Input | Turn on | 1,2 |
| Enable | Enable | Disable | Disable | FIFO Data Input | Turn off | |
| Enable | Enable | Disable | Enable | FIFO Data Input | Turn off | 1 |
| Enable | Enable | Enable | Disable | FIFO Data Input | Turn on | 2 |
| Enable | Enable | Enable | Enable | FIFO Data Input | Turn on | 1,2 |

NOTE 1 CAS command with DC0, DC1, DC2 and/or DC3=1 is inhibited to FIFO Write command, even though Write Data Copy MR21 OP[4]=$1_B$.

NOTE 2 Valid Data input to RDQS_t/Parity pin is recommended, if MR22 OP[5:4]=$01_B$ and/or MR46 OP[2]=$1_B$.

LPDDR5 SDRAM supports DMI output behavior control at Read FIFO command and Read DQ Calibration Command as optional function. MR0 OP[4] indicates whether DMI output behavior control is supported or not. If MR0 OP[4]=$1_B$, DMI input/output behavior control mode can be selected MR13 OP[4].

- MR0 OP[4]=$0_B$
  Only mode 1 is supported.
- MR0 OP[4]=$1_B$
  Mode 1 and Mode 2 can be selectable.

The outline of Mode 1 and Mode 2.

- Mode1: MR13 OP[4]=$0_B$
  DMI Output behavior follows MR setting Read DBI, Read Link ECC and Read Data Copy.
- Mode 2: MR13 OP[4]=$1_B$
  DMI outputs a valid data, if Read FIFO Command and Read DQ Calibration Command is issued when Data Mask and/or Write DBI are enabled even though Read DBI, Read Link ECC and Read Data Copy are disabled.

#### 4.2.8.1.1.1 DMI Output Behavior Mode 1

**Table 45 - DMI Output behavior and Read Latencies for Read FIFO command**

| Function | | | DMI Output Behavior | Read Latencies | | Note |
|---|---|---|---|---|---|---|
| Read DBI MR3 OP[6] | Read Link ECC MR22 OP[7:6] | Read Data Copy MR21 OP[5] | | x16 | x8 | |
| Disable | Disable | Disable | Not in use, don't care | Set 0 | Set 1 | 1 |
| Disable | Disable | Enable | FIFO Data Output | Set 1 | Set 2 | 1 |
| Disable | Enable | Disable | FIFO Data Output | Set 0 | Set 1 | 2 |
| Disable | Enable | Enable | Prohibited setting | N/A | N/A | |
| Enable | Disable | Disable | FIFO Data Output | Set 1 | Set 2 | 1 |
| Enable | Disable | Enable | FIFO Data Output | Set 1 | Set 2 | 1 |
| Enable | Enable | Disable | Prohibited setting | N/A | N/A | |
| Enable | Enable | Enable | Prohibited setting | N/A | N/A | |

NOTE 1 For Read latency set, refer to the table where Read Link ECC function is disabled.
NOTE 2 For Read latency set, refer to the table where Read Link ECC function is enabled.
NOTE 3 The output data from DMI by the FIFO Read command has no meaning if DMI behavior is "Not in use, don't care" in Table 44.

#### 4.2.8.1.1.2 DMI Output Behavior Mode 2

**Table 46 - Relationship between MR setting and DMI behavior for RFF and RDC command**

| Function | | | | | DMI Output Behavior | Read Latency | |
|---|---|---|---|---|---|---|---|
| Data Mask MR13 OP[5] | Write DBI MR3 OP[7] | Read DBI MR3 OP[6] | Read Link ECC MR22 OP[7:6] | Read Data Copy MR21 OP[5] | Read FIFO Command | x16 | x8 |
| Disable | Disable | Disable | Disable | Disable | Not in use, don't care | Set 0 | Set 1 |
| Disable | Enable | Disable | Disable | Disable | FIFO Data Output | Set 0 | Set 1 |
| Enable | Disable | Disable | Disable | Disable | FIFO Data Output | Set 0 | Set 1 |
| Enable | Enable | Disable | Disable | Disable | FIFO Data Output | Set 0 | Set 1 |

#### 4.2.8.2 WCK-RDQS_t/Parity Training

When Link ECC is enabled, the RDQS_t pin will have two different functions.

1. During Read operations, RDQS_t will function as RDQS_t.
2. During Write operations RDQS_t will function as Parity.

Hence the RDQS_t pin cannot be used as the data output pin during normal WCK-DQ Training procedure.

To train the RDQS_t pin, the Read and Write FIFO commands are used with MR46 OP[2] is set to “1”. With this bit set, a Write FIFO command will allow data to be written through the RDQS_t pin. The data written via the RDQS_t pin can then be read back via the DMI by a Read FIFO command. The following MR setting is needed prior to set $1_B$ to MR46 OP[2]: WCK-RDQS_t/Parity Training Enabled.

- Write Link ECC: MR22 OP[5:4]=$01_B$
- Read Link ECC: MR22 OP[7:6]=$01_B$

Once MR46 OP[2] set $1_B$, allowable command is as follows.

- CAS_WR, CAS_RD, CAS_FS and CAS_OFF
- Read FIFO
- Write FIFO
- DES
- NOP
- Refresh (All bank and Per bank)
- Mode Register Write for FSP-WR: MR16 OP[1:0], FSP-OP: MR16 OP[3:2], VRCG: MR16 OP[6] and MR46 OP[2].

And WCK-RDQS_t/Parity Training: MR46 OP[2]=$1_B$ can only be used beyond 1600MHz of WCK frequency, as well as Link ECC function.

Exiting WCK-RDQS_t/Parity Training mode, MR46 OP[2] must be set to “0”.

#### 4.2.8.3 FIFO Pointer Reset and Synchronism

The Read and Write FIFO pointers are reset under the following conditions:

- Power-up initialization
- RESET_n asserted
- Power-down entry
- Deep Sleep Mode entry
- Self Refresh Power-Down entry

The Write FIFO command advances the Write-FIFO pointer, and the Read FIFO command advances the Read-FIFO pointer. To keep the pointers aligned, the SoC memory controller must adhere to the following restriction at the end of WCK-DQ Training period:

- $b = a + (n \times c)$

Where:

'a' is the number of Write FIFO commands
'b' is the number of Read FIFO commands
'c' is the FIFO depth (=8 for LPDDR5)
'n' is a positive integer, ≥ 0

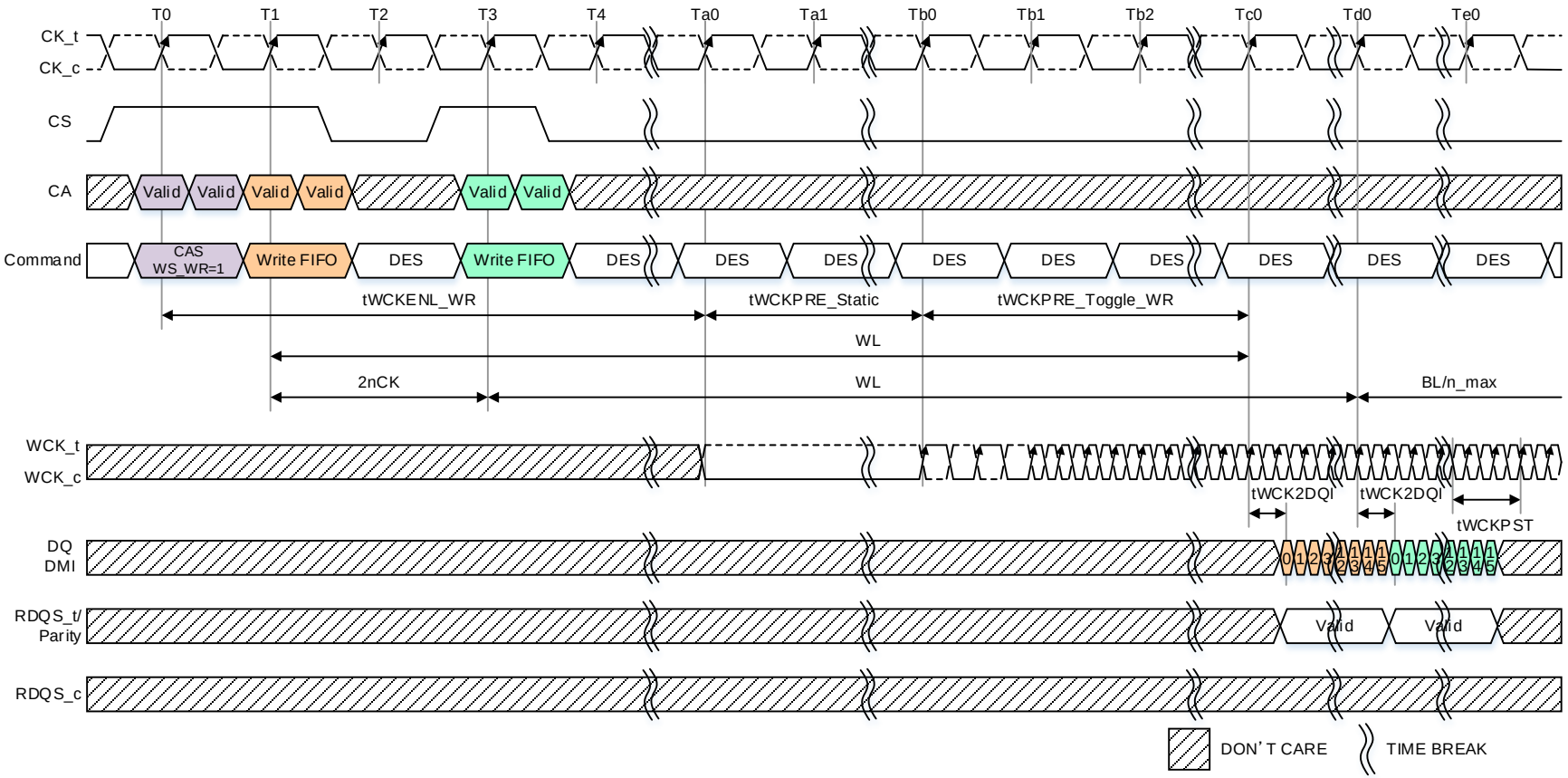


NOTE 1 tWCK2CK is 0ps in this instance.
NOTE 2 The end of both WL and tWCKPRE_Toggle_WR are the same timing in this instance.
NOTE 3 The (8 +1) Write FIFO command will overwrite the FIFO data from the first command. If fewer than 8 Write FIFO commands are executed, then the remaining FIFO locations will contain undefined data.
NOTE 4 CAS command is needed before a Write FIFO command when a WCK synchronization will expire.
NOTE 5 In case where the input receiver of RDQS_t/Parity and DMI are enabled by MR setting.

**Figure 49 - Consecutive Write FIFO Operation timing for BG mode: CKR (WCK vs. CK) = 4:1**

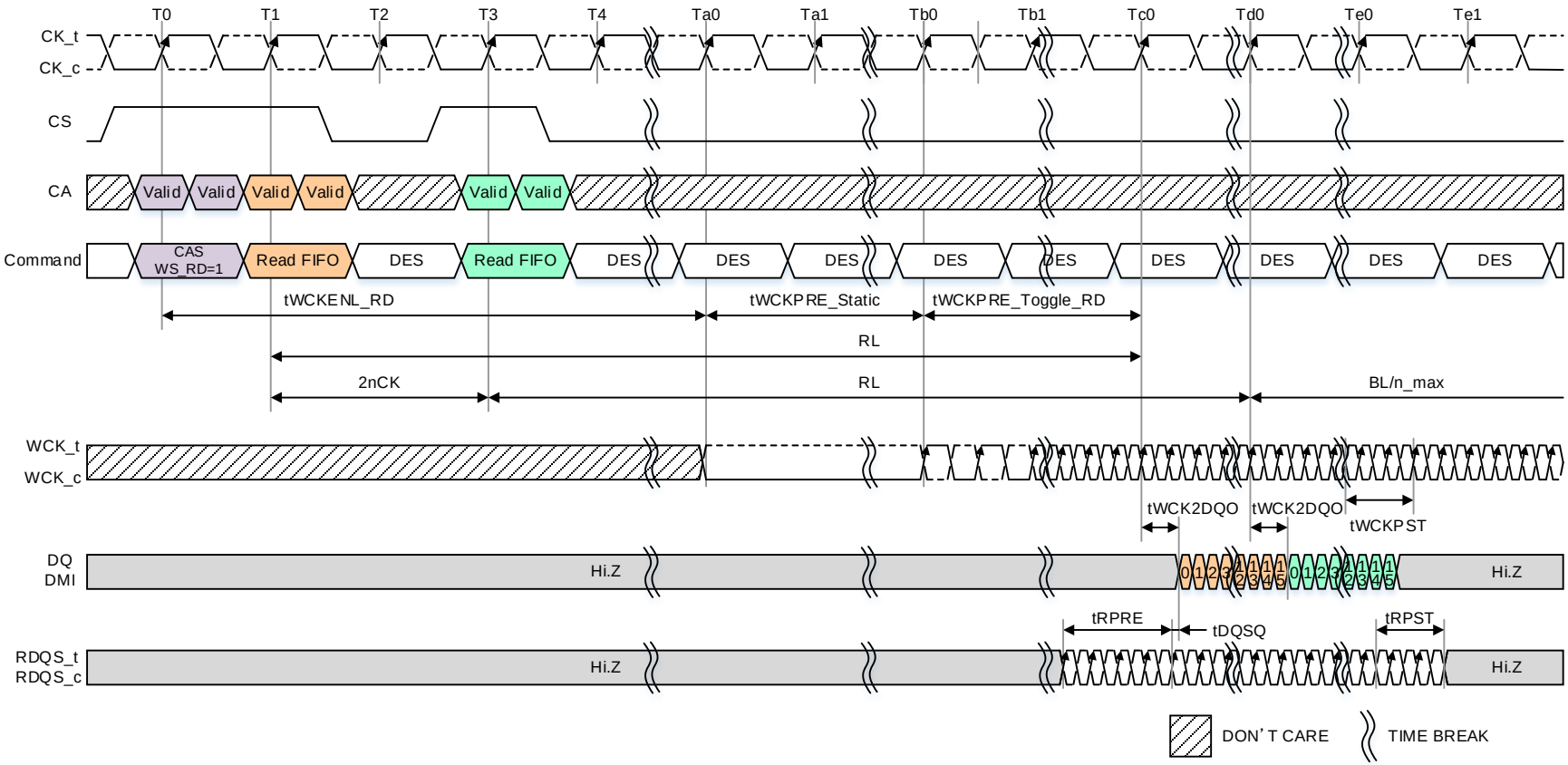


NOTE 1 tWCK2CK is 0ps in this instance.
NOTE 2 The end of both RL and tWCKPRE_Toggle_RD are the same timing in this instance.
NOTE 3 Data may be continuously read from the FIFO without any data corruption. After 8 Read-FIFO commands the FIFO pointer will wrap back to the 1st FIFO and continue advancing.
NOTE 4 CAS command is needed before a Read FIFO command when a WCK synchronization will expire.
NOTE 5 In case where the output driver of DMI is enabled by MR setting.

**Figure 50 - Consecutive Read FIFO Operation timing for BG mode: CKR (WCK vs. CK) = 4:1**

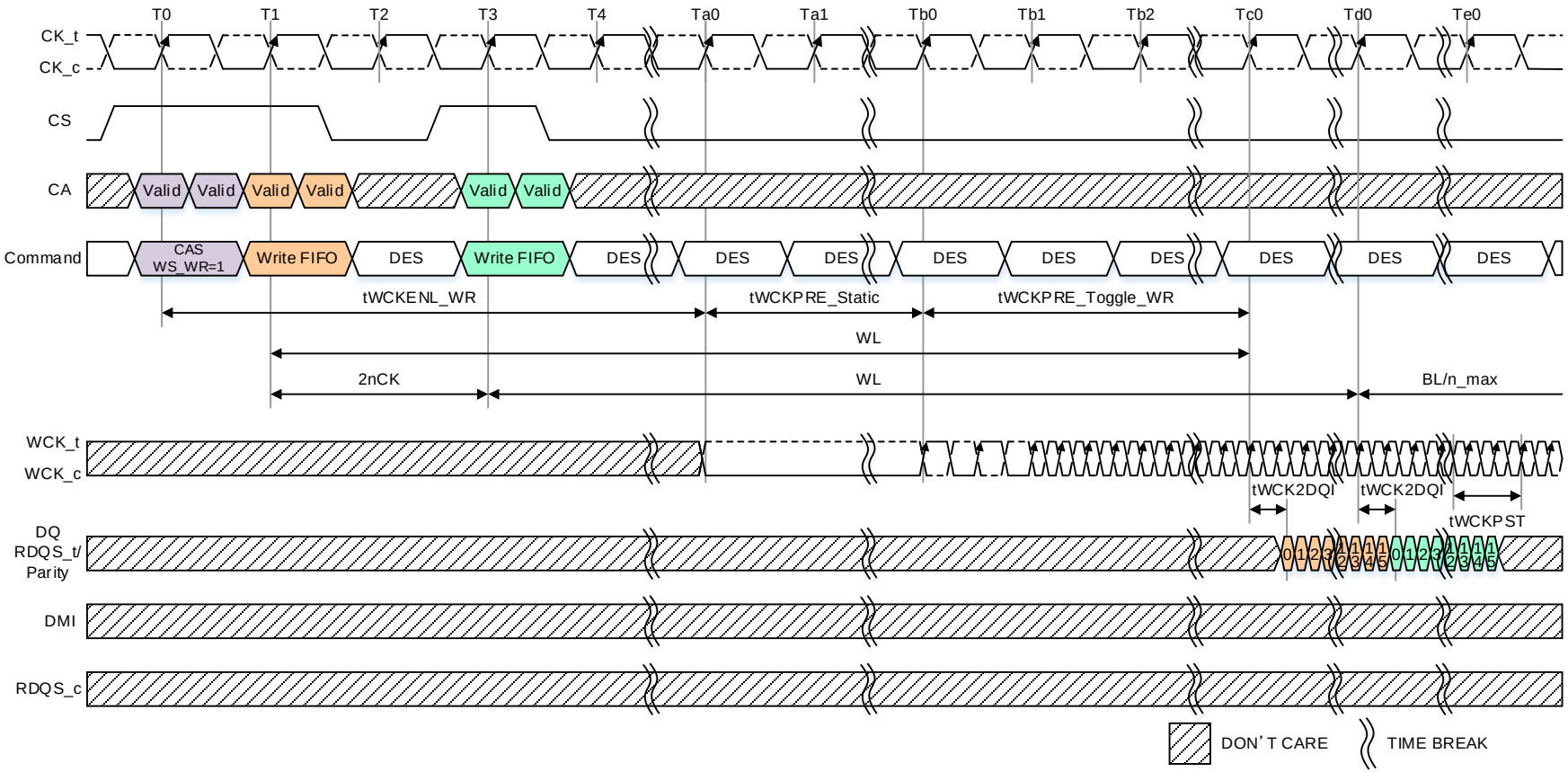


NOTE 1 WCK-RDQS_t/Parity Training is enabled: MR46 OP[2] =$1_B$
NOTE 2 tWCK2CK is 0ps in this instance.
NOTE 3 The end of both WL and tWCKPRE_Toggle_WR are the same timing in this instance.
NOTE 4 The (8 +1) Write FIFO command will overwrite the FIFO data from the first command. If fewer than 8 Write-FIFO commands are executed, then the remaining FIFO locations will contain undefined data.
NOTE 5 CAS command is needed before a Write FIFO command when a WCK synchronization will expire.
NOTE 6 In case where the input receiver of RDQS_t/Parity and DMI are enabled by MR setting.

**Figure 51 - Consecutive Write FIFO Operation timing: WCK-RDQS_t/Parity Training is enabled for BG mode: CKR (WCK vs. CK) = 4:1**

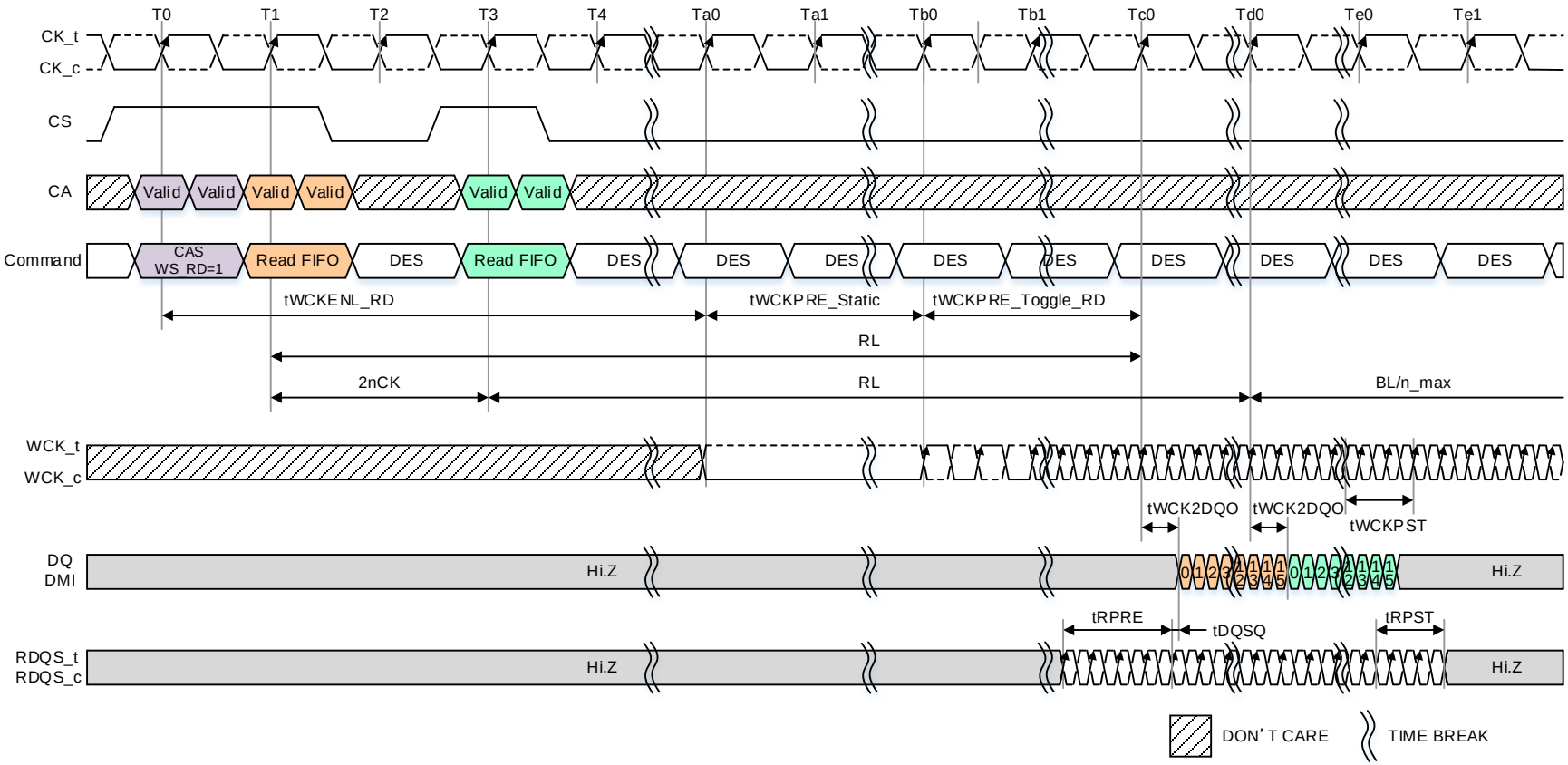


NOTE 1 WCK-RDQS_t/Parity Training is enabled: MR46 OP[2] =$1_B$
NOTE 2 DMI pin outputs the data which written to FIFO through the Parity pin by the Write FIFO command.
NOTE 3 tWCK2CK is 0ps in this instance.
NOTE 4 The end of both RL and tWCKPRE_Toggle_RD are the same timing in this instance.
NOTE 5 Data may be continuously read from the FIFO without any data corruption. After 8 Read FIFO commands the FIFO pointer will wrap back to the 1st FIFO and continue advancing.
NOTE 6 CAS command is needed before a Read FIFO command when a WCK synchronization will expire.
NOTE 7 In case where the output driver of DMI is enabled by MR setting.

**Figure 52 - Consecutive Read FIFO Operation timing: WCK-RDQS_t/Parity Training is enabled for BG mode: CKR (WCK vs. CK) = 4:1**

#### 4.2.8.4 Command constraints for Write/Read FIFO command

The command constraints between CAS (WS_WR), CAS (WS_RD), Write FIFO and Read FIFO are shown in the command constraint section.

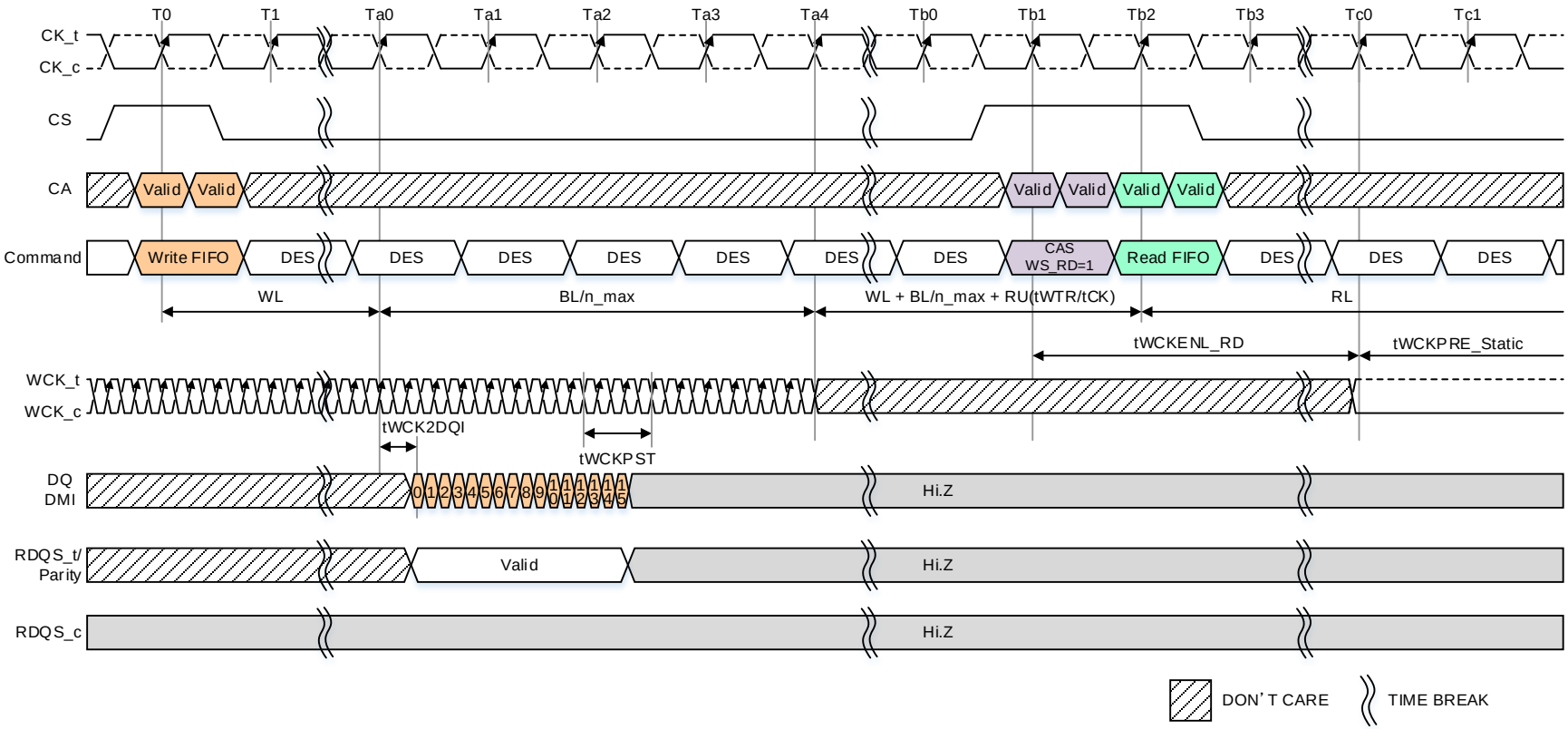


NOTE 1 tWCK2CK is 0ps in this instance.
NOTE 2 In case where the input receiver of RDQS_t/Parity and DMI are enabled by MR setting.

**Figure 53 - Write FIFO to Read FIFO Timing for BG mode: CKR (WCK vs. CK) = 4:1**

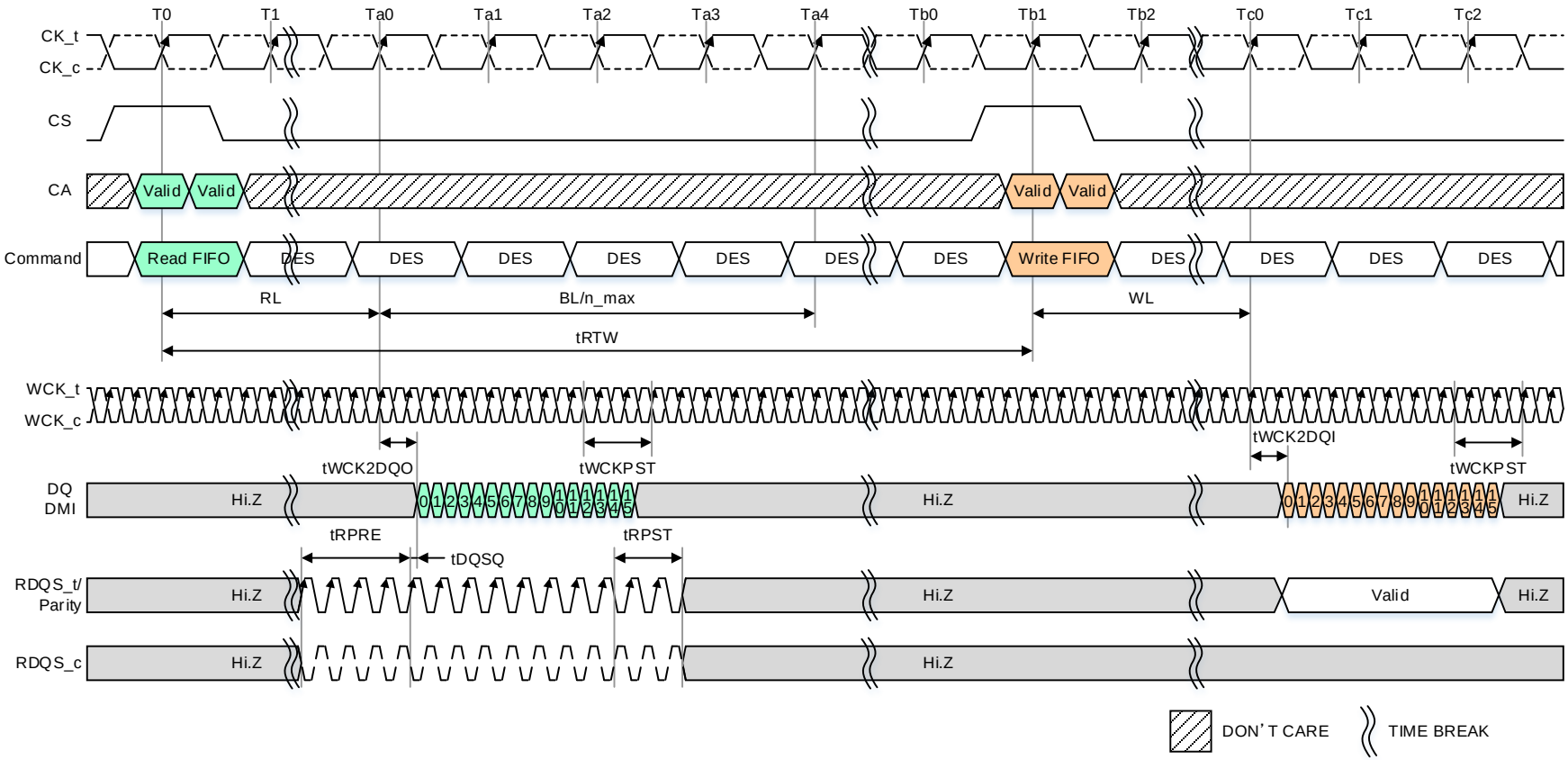


NOTE 1 tWCK2CK is 0ps in this instance.
NOTE 2 In case where the output driver of DMI is enabled by MR setting.
NOTE 3 In case where the input receiver of RDQS_t/Parity and DMI are enabled by MR setting.

**Figure 54 - Read FIFO to Write FIFO Timing for BG mode: CKR (WCK vs. CK) = 4:1**

### 4.2.9 RDQS toggle mode

LPDDR5 SDRAM feature a RDQS toggle mode that outputs continuous-toggle pattern on the RDQS pins. Before issuing MRW commands, a CAS-WS_FS command is required. After “tWCKENL_FS + tWCKPRE_static”, a MRW [MR46 OP[1]=$1_B$] has to be issued to enable the RDQS toggle mode. After “tERQE” passed after MRW-2 [RDQS toggle mode Enabled], LPDDR5 SDRAM will start driving RDQS_t and RDQS_c. LPDDR5 device exits the RDQS toggle mode by issuing a MRW [MR46 OP[1]=$0_B$ RDQS toggle mode Disabled]. After “tERQX” has passed from MRW-2 [RDQS toggle mode Disabled], LPDDR5 SDRAM RDQS will transit to a Hi-impedance state. During tERQX period, WCK has to continue toggling. Refer to the section of LPDDR5 enhanced RDQS training mode about tERQE, tERQX and ODT related timing. In tERQEand tERQX period, the DES command is only allowed.
RDQS_t/c output behavior follows RDQS: MR20 OP[1:0] setting. Therefore enabling RDQS toggle mode is meaningless if MR20 OP[1:0] as $00_B$: RDQS_t and RDQS_c disabled.

During the RDQS toggle mode, Power Down, SREF, Deep sleep, MRR, Write, Mask Write, Read, Write FIFO, Read FIFO and RDC are not allowed, however NOP, DES, ACT-1, ACT-2, PREpb, PREab, REFpb, REFab, MRW-1, MRW-2 and MPC can be issued. It is not allowed to adjust WCK duty cycle during the RDQS toggle mode through MR30 OP[3:0] for DCAL and MR30 OP[7:4] for DCAU setting. Additionally, from RDQS toggle mode entry to exit, the internal data bus is working as the read function. Hence the MR which concerned output control, ODT/NT-ODT and WCK setting are not allowed to change, refer to **Table 47** for specific MRs. RDQS toggle mode and Enhanced RDQS training mode are mutually exclusive and MR46 OP[0] and MR46 OP[1] are not allowed to change at the same MRW command.

**Table 47 – MR# and Operand which are prohibited to change during RDQS toggle mode.**

| Function | MR# & Operand | Notes |
|---|---|---|
| RL & nRBTP | MR2 OP[3:0] | |
| PDDS | MR3 OP[2:0] | |
| DBI-RD | MR3 OP[6] | |
| Write DBI | MR3 OP[7] | |
| RPST Mode | MR10 OP[0] | |
| WCK PST | MR10 OP[3:2] | |
| RDQS PRE | MR10 OP[5:4] | |
| RDQS PST | MR10 OP[7:6] | |
| NT ODT | MR11 OP[3] | |
| VRO | MR13 OP[2] | |
| DMI I/O Control | MR13 OP[4] | |
| Data Mask | MR13 OP[5] | |
| FSP-OP | MR16 OP[3:2] | |
| CBT | MR16 OP[5:4] | |
| SoC ODT | MR17 OP[2:0] | |
| WCK ODT | MR18 OP[2:0] | |
| WCK FM | MR18 OP[3] | |
| WCK ON | MR18 OP[4] | |
| WCK2CK Leveling | MR18 OP[6] | |
| CKR | MR18 OP[7] | |
| DVFSQ | MR19 OP[3:2] | |
| RDQS | MR20 OP[1:0] | |
| WCK Mode | MR20 OP[3:2] | |
| RDCFE | MR21 OP[5] | |
| WECC | MR22 OP[5:4] | |
| RECC | MR22 OP[7:6] | |
| DCM_Start/Stop | MR26 OP[0] | |
| Flip inputs to cancel offset (DCM_Flip) | MR26 OP[1] | |
| Read/Write-based WCK-RDQS_t Training | MR26 OP[7] | 1 |
| ZQ Reset | MR28 OP[0] | |
| ZQ Stop | MR28 OP[1] | |
| ZQ Interval | MR28 OP[3:2] | |
| ZQ Mode | MR 28 OP[5] | |
| PPRE | MR41 OP[4] | |
| NT DQ ODT | MR41 OP[7:5] | |
| Enhanced RDQS | MR46 OP[0] | |
| FIFO RDQS Training | MR46 OP[2] | 2 |

NOTE 1 RDQS toggle mode and Read/Write-based WCK-RDQS_t Training cannot be enabled at the same time.

NOTE 2 RDQS toggle mode and FIFO RDQS Training cannot be enabled at the same time.

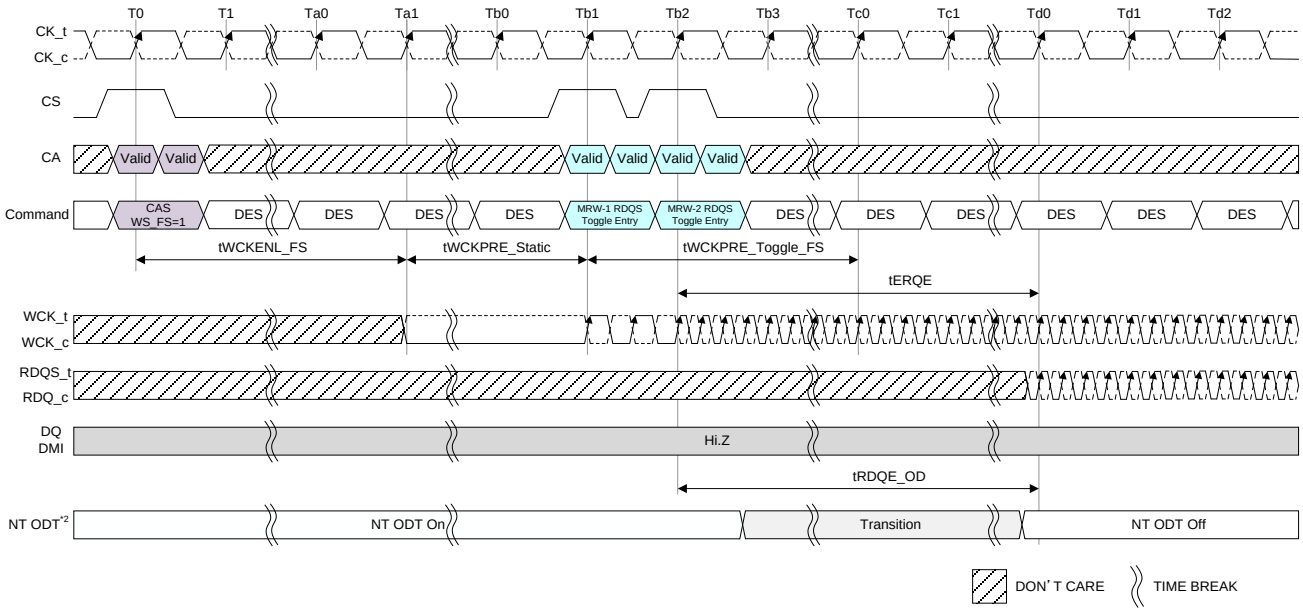


NOTE 1 DES commands are shown for ease of illustration; other commands may be valid at these times.

NOTE 2 "NT ODT" illustrates the On/Off status of NT-ODT for RDQS_t/c, DQ and/or DMI in case of NT-ODT enabled.

**Figure 55 - RDQS toggle mode entry timing example**

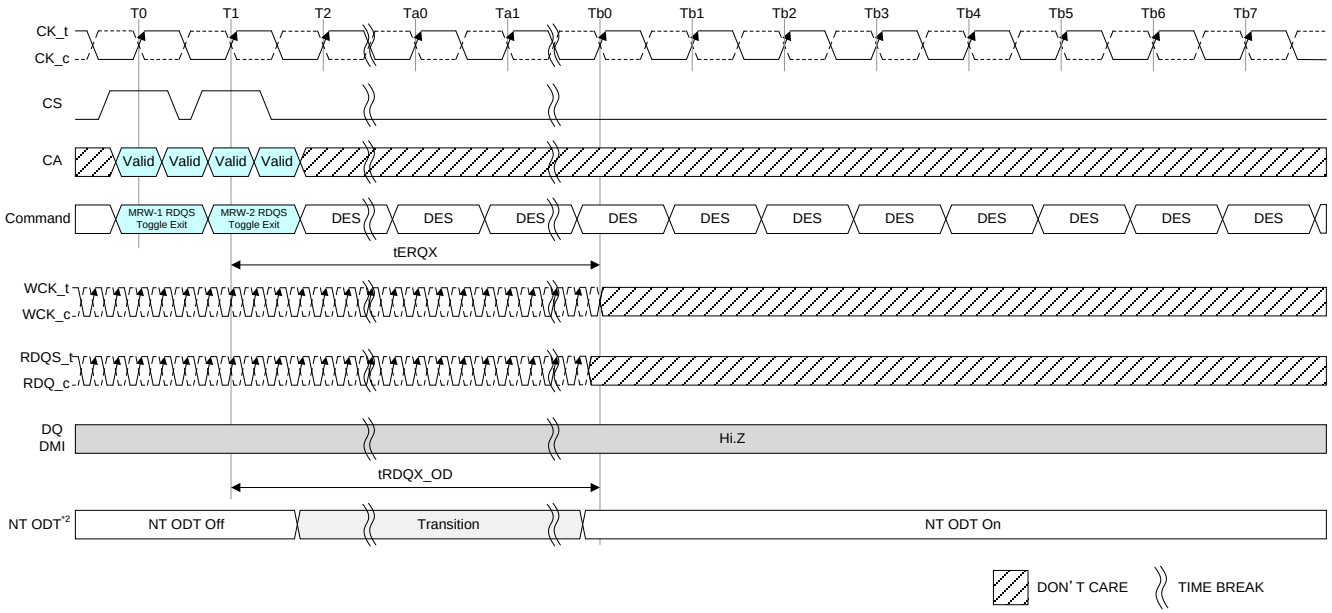


NOTE 1 DES commands are shown for ease of illustration; other commands may be valid at these times.

NOTE 2 "NT ODT" illustrates the On/Off status of NT-ODT for RDQS_t/c, DQ and/or DMI in case of NT-ODT enabled.

**Figure 56 - RDQS toggle mode exit timing example**

### 4.2.10 Enhanced RDQS training mode

LPDDR5 will enter Enhanced RDQS training mode by setting MR46 OP[0] Enhanced RDQS training mode enable. Before issuing MRW command, CAS WS_FS is required. After WCKENL_FS+tWCKPRE static, MRW commands have to be issued to enable Enhanced RDQS training mode. tERQE after MRW, the LPDDR5 will start driving RDQS_t = low and RDQS_c =high.

To keep RDQS low-impedance, during enhanced RDQS training mode WCK has to continue toggling.

When the LPDDR5 receives a Read Command, the LPDDR5 will output RDQS and data. The RDQS preamble and postamble are followed MR10 OP[7:4]. After a burst read operation, the LPDDR5 will keep RDQS low-Z while in this mode.

LPDDR5 exits Enhanced RDQS training mode by setting MR46 OP[0] Enhanced RDQS training mode disable. After tERQX has passed from MRW, LPDDR5 RQDS will transit to a Hi-impedance state. During tERQX period, WCK has to continue toggling.

In tERQE and tERQXperiod, the DES command is only allowed and during Enhanced RDQS mode, Read data training mode, ACT-1, ACT-2, PREpb, PREab, REFpb, REFab, RD, RD32, MRW-1, MRW-2, MRR, MPC and RDC can be issued and other commands are not allowed. Provided that if DMI output behavior control is set to Mode 2 (MR13 OP[4]=$1_B$), issuing RDC command is prohibited.

Additionally, from enhanced RDQS training mode entry to exit, the internal data bus is working as the read function. Hence the MR which concerned output control, ODT/NT-ODT and WCK setting are not allowed to change, refer to Table 48 for specific MRs. MR46 OP[0] and MR46 OP[1] are not allowed to change at the same MRW command.

RDQS_t and RDQS_c drive follow MR20 OP[1:0].

RDQS ODT is disabled after tRDQE_OD passed after enhanced RDQS enable MRW. RDQS ODT is enabled after tRDQX_OD passed after enhanced RDQS disable MRW.

**Table 48 - MR# and Operand which are prohibited to change during Enhanced RDQS training mode**

| Function | MR# & Operand | Notes |
|---|---|---|
| RL & nRBTP | MR2 OP[3:0] | |
| PDDS | MR3 OP[2:0] | |
| DBI-RD | MR3 OP[6] | |
| Write DBI | MR3 OP[7] | |
| RPST Mode | MR10 OP[0] | |
| WCK PST | MR10 OP[3:2] | |
| RDQS PRE | MR10 OP[5:4] | |
| RDQS PST | MR10 OP[7:6] | |
| NT ODT | MR11 OP[3] | |
| VRO | MR13 OP[2] | |
| DMI I/O Control | MR13 OP[4] | |
| Data Mask | MR13 OP[5] | |
| FSP-OP | MR16 OP[3:2] | |
| CBT | MR16 OP[5:4] | |
| SoC ODT | MR17 OP[2:0] | |
| WCK ODT | MR18 OP[2:0] | |
| WCK FM | MR18 OP[3] | |
| WCK ON | MR18 OP[4] | |
| WCK2CK Leveling | MR18 OP[6] | |
| CKR | MR18 OP[7] | |
| DVFSQ | MR19 OP[3:2] | |
| RDQS | MR20 OP[1:0] | |
| WCK Mode | MR20 OP[3:2] | |
| RDCFE | MR21 OP[5] | |
| WECC | MR22 OP[5:4] | |
| RECC | MR22 OP[7:6] | |
| DCM_Start/Stop | MR26 OP[0] | |
| Flip inputs to cancel offset (DCM_Flip) | MR26 OP[1] | |
| Read/Write-based WCK-RDQS_t Training | MR26 OP[7] | 1 |
| ZQ Reset | MR28 OP[0] | |
| ZQ Stop | MR28 OP[1] | |
| ZQ Interval | MR28 OP[3:2] | |
| ZQ Mode | MR28 OP[5] | |
| PPRE | MR41 OP[4] | |
| NT DQ ODT | MR41 OP[7:5] | |
| RDQS Toggle | MR46 OP[1] | |
| FIFO RDQS Training | MR46 OP[2] | 2 |

NOTE 1 Enhanced RDQS training mode and Read/Write-based WCK-RDQS_t Training cannot be enabled at the same time.

NOTE 2 Enhanced RDQS training mode and FIFO RDQS Training cannot be enabled at the same time.

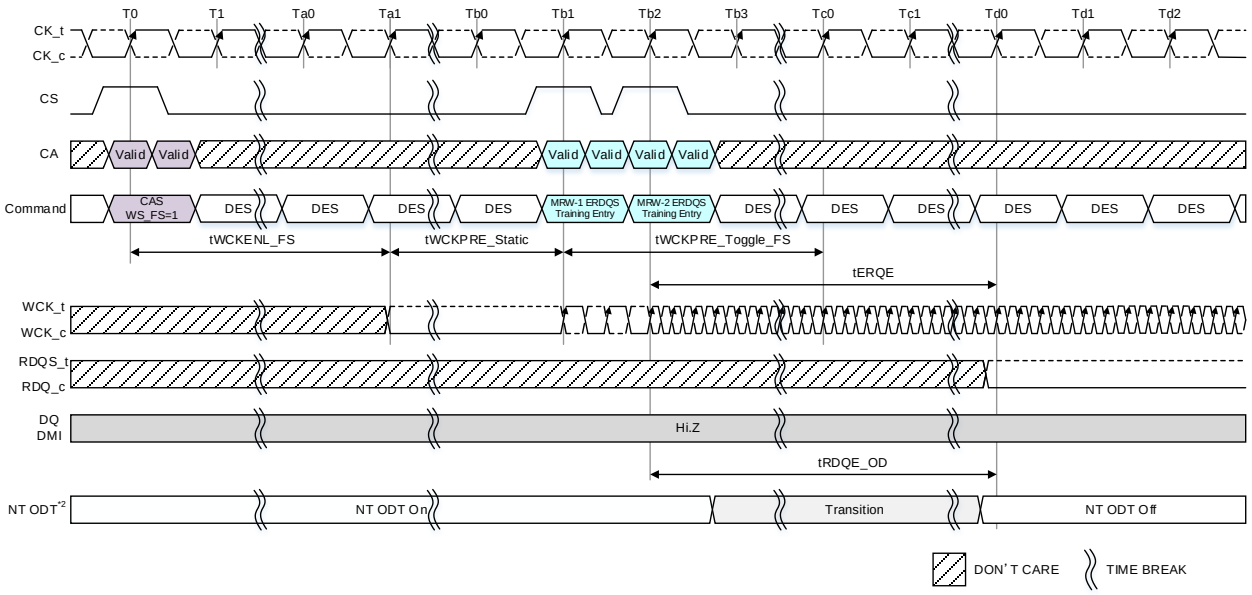


NOTE 1 DES commands are shown for ease of illustration; other commands may be valid at these times.

NOTE 2 In case of NT ODT is enable case for RDQS_t/c, DQ and/or DMI.

**Figure 57 - Enhanced RDQS training mode entry timing**

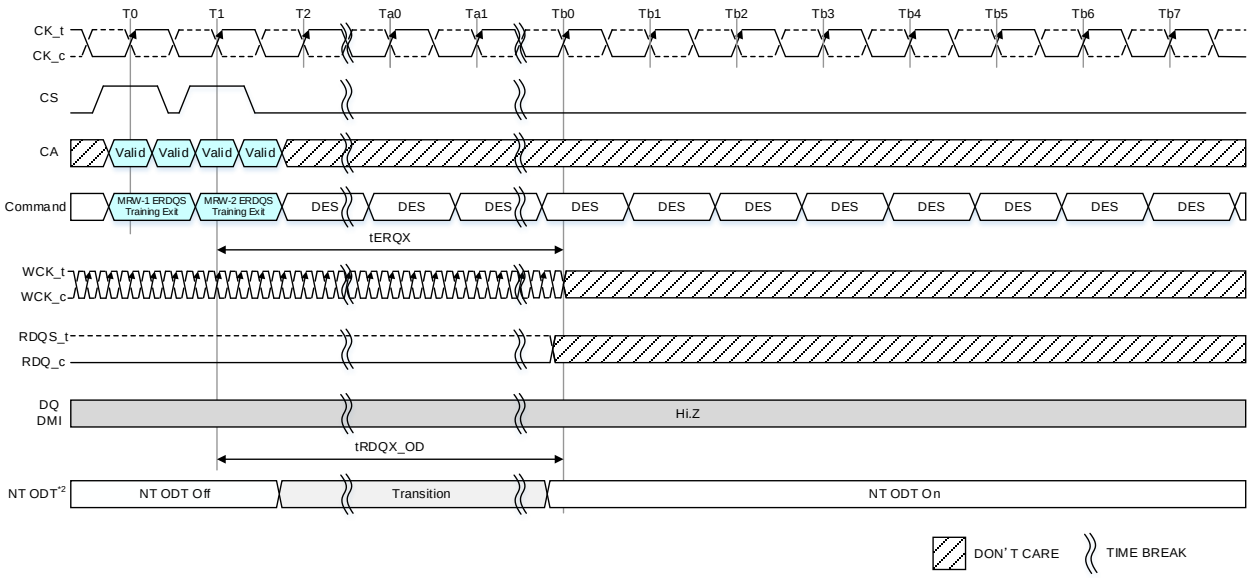


NOTE 1 DES commands are shown for ease of illustration; other commands may be valid at these times.

NOTE 2 In case of NT ODT is enable case for RDQS_t/c, DQ and/or DMI.

**Figure 58 - Enhanced RDQS training mode exit timing**

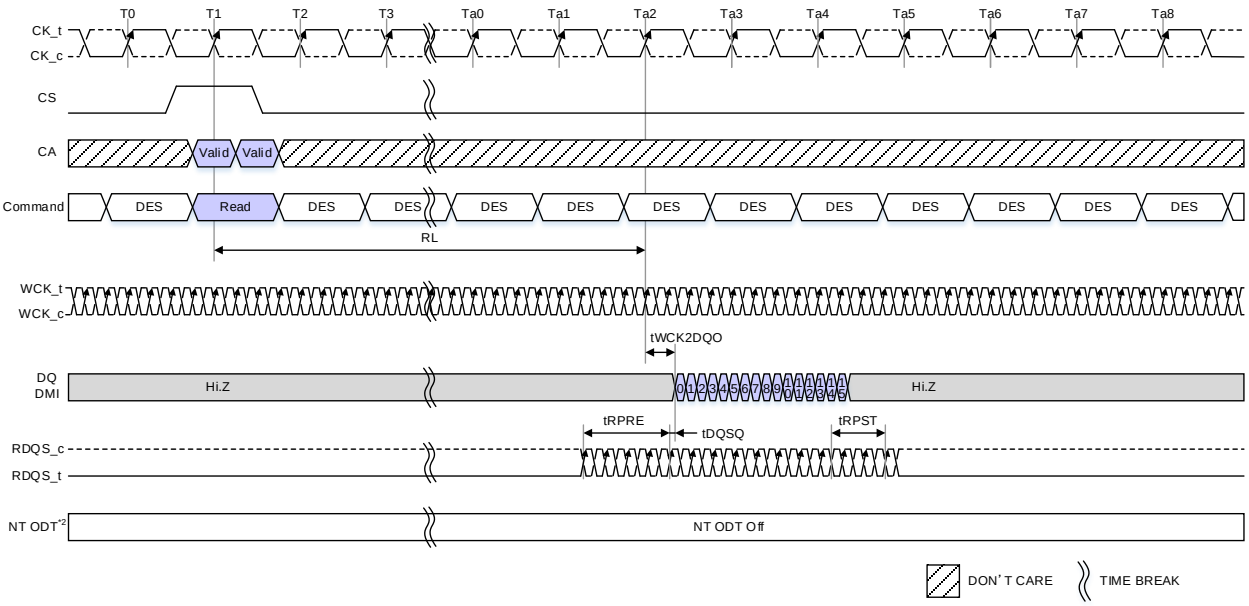


NOTE 1 DES commands are shown for ease of illustration; other commands may be valid at these times.

NOTE 2 NT ODT is disabled regardless of NT ODT setting MR41 OP[7:5] during enhanced RDQS training mode.

**Figure 59 - Read operation during Enhanced RDQS training mode**

**Table 49 - Enhanced RQDS training mode entry and exit timings**

| Parameter | Symbol | Min/Max | Value | Unit | Note |
|---|---|---|---|---|---|
| Enhanced RDQS toggle mode entry | tERQE | Max | Max (35ns, 4nCK) | ns | |
| Enhanced RDQS toggle mode exit | tERQX | Max | Max (35ns, 4nCK) | ns | |
| ODT disable from Enhanced RDQS toggle mode entry | tRDQE_OD | Max | Max (35ns, 4nCK) | ns | |
| ODT enable from Enhanced RDQS toggle mode exit | tRDQX_OD | Max | Max (35ns, 4nCK) | ns | |

### 4.2.11 Read/Write-based WCK-RDQS_t Training

When Write Link ECC is enabled, the RDQS_t pin functions as parity during write operation. RDQS_t, DQ data, and WCK is required to be trained to meet the write timing. In addition to WCK-RDQS_t/Parity Training in Section 4.2.8.2, which utilizes Read and Write FIFO commands for WCK-RDQS_t training, LPDDR5 SDRAM optionally supports WCK-RDQS_t training by Read and Write commands. If LPDDR5 device supports the Read/Write-based WCK-RDQS_t training function (MR26 OP[6]=$1_B$), users may enable the training function by setting MR26 OP[7]=$1_B$.

Read/Write-based WCK-RDQS_t Training MR26 OP[7]=$1_B$ can only be used beyond 1600MHz of WCK frequency, as well as Link ECC function.

To enter the Read/Write-based WCK-RDQS_t training mode, a MRW command is required to set MR26 OP[7]=$1_B$. After tRDQSTFE has passed from the MRW command, LPDDR5 SDRAM is ready for Read/Write-based WCK-RDQS_t training where RDQS_t behaves like DMI pin with the Write DBI enabled (Read/Write-based WCK-RDQS_t Training might use the Write DBI circuits). Hence Write DBI: MR3 OP[7] is required to be set $1_B$ prior to entering WCK-RDQS_t training mode. And DMI input is ignored by LPDDR5 SDRAM during write operation even though Write DBI is enabled: MR3 OP[7] = $1_B$. In this training mode, the controller is required to follow LPDDR5 SDRAM Row and Read/Write operations to access SDRAM. A bank activate command is required before issuing Read or Write commands. The training data is written to DRAM by issuing CAS command with WS_WR=1 followed immediately by Write commands. LPDDR5 SDRAM inverts Write data received on the DQ inputs in case RDQS_t is sampled HIGH, or leaves the Write data non-inverted in case RDQS_t is sampled LOW. The data written to the SDRAM by the Write command can be read back by issuing CAS command with WS_RD=1 followed immediately by Read commands. The controller compares the read data with “expected” data to see if further training is needed. The number of consecutives Read or Write commands, i.e., length of training pattern, is not limited. Certainly, the Write/Read command can be issued without WCK Sync. command during WCK Sync state. When the training is completed, LPDDR5 SDRAM exits Read/Write-based WCK-RDQS_t training mode by setting MR26 OP[7]=$0_B$. After tRDQSTFX has passed from the MRW, LPDDR5 is back to normal operation where RDQS_t functions based on Write Link ECC setting during write operation.
In tRDQSTFE and tRDQSTFX period, the DES command is only allowed.

**Table 50 – Relationship among RDQS_t, Input data and data written to cell**

| | | Input Data from Controller | | | | | | | | | The data written to the cell | | | | | | | |
|---|---|---|---|---|---|---|---|---|---|---|---|---|---|---|---|---|---|---|
| # | RDQS_t | DQ0 | DQ1 | DQ2 | DQ3 | DQ4 | DQ5 | DQ6 | DQ7 | | DQ0 | DQ1 | DQ2 | DQ3 | DQ4 | DQ5 | DQ6 | DQ7 |
| 1 | 0 | D | D | D | D | D | D | D | D | => | D | D | D | D | D | D | D | D |
| 2 | 1 | D | D | D | D | D | D | D | D | => | /D | /D | /D | /D | /D | /D | /D | /D |

NOTE 1 “/D” is inverted data of “D”.

During Read/Write-based WCK-RDQS_t training, the following commands are prohibited to simplify the training procedure.

- Read FIFO (RFF)
- Write FIFO (WFF)
- Masked Write (MWR)
- CAS_Write Data Copy (WDC)
- CAS_Write X (WRX)
- Read DQ Calibration (RDC)

**Table 51 - Read/Write-based RDQS_t training mode entry and exit timings**

| Parameter | Symbol | Min/Max | Value | Unit | Note |
|---|---|---|---|---|---|
| Read/Write-based RDQS_t training mode entry | tRDQSTFE | Min | Max (35ns, 4nCK) | ns | |
| Read/Write-based RDQS_t training mode exit | tRDQSTFX | Min | Max (35ns, 4nCK) | ns | |

#### 4.2.11.1 Relationship between MR setting and Read/Write-based WCK-RDQS_t Training behavior

The treatment of Mode Register setting and DMI, RDQS_t/Parity pin behavior during Read/Write-based WCK-RDQS_t Training mode which is MR26 OP[7]=$1_B$ is shown in below.

**Table 52 - Relationship between MR setting and Read/Write-based WCK-RDQS_t Training**

| Subject | Behavior | Note |
|---|---|---|
| MR13 OP[5]: Data Mask | Function Disable | 1 |
| MR3 OP[7]: Write DBI | Function Disable | 2 |
| MR22 OP[5:4]: Write Link ECC | The MR setting regards as the disabled even if the Write Link ECC is enabled. | 3 |
| MR3 OP[6]: Read DBI | Read DBI function follows MR3 OP[6] setting. | |
| MR22 OP[7:6]: Read Link ECC | Read Link ECC function follows MR22 OP[7:6] setting. | |
| MR21 OP[5]: Read Data Copy | Read Data Copy function follows MR21 OP[5] setting. | |

NOTE 1 Input data from DMI does not affect the input data to DQs, if MR13 OP[5]=$0_B$.

NOTE 2 Write DBI: MR3 OP[7] is required to be set $1_B$ prior to entering WCK-RDQS_t training mode, however input data from DMI does not affect the input data to DQs.

NOTE 3 This MR setting doesn't affect nWR value when MR26 OP[7]=$1_B$.
Stored data in MR43, MR44 and MR45 will be retained even if Write Link ECC function will be disabled by entering Read/Write-based WCK-RDQS_t Training.

**Table 53 DMI, RDQS_t/Parity Input behavior for Read/Write-based WCK-RDQS_t Training**

| Function | | | | DMI Input Receiver | nWR | RDQS_t/ Parity Receiver | Note |
|---|---|---|---|---|---|---|---|
| Data Mask MR13 OP[5] | Write DBI MR3 OP[7] | Write Link ECC MR22 OP[5:4] | Write Data Copy MR21 OP[4] | | x16 and x8 | | |
| Disable | Disable | Disable | Disable | Turn off | w/o Link ECC | Turn on | |
| Disable | Disable | Disable | Enable | Turn off | w/o Link ECC | Turn on | 1 |
| Disable | Disable | Enable | Disable | Turn off | w/o Link ECC | Turn on | |
| Disable | Disable | Enable | Enable | Turn off | w/o Link ECC | Turn on | 1 |
| Disable | Enable | Disable | Disable | Turn off | w/o Link ECC | Turn on | |
| Disable | Enable | Disable | Enable | Turn off | w/o Link ECC | Turn on | 1 |
| Disable | Enable | Enable | Disable | Turn off | w/o Link ECC | Turn on | |
| Disable | Enable | Enable | Enable | Turn off | w/o Link ECC | Turn on | 1 |
| Enable | Disable | Disable | Disable | Turn off | w/o Link ECC | Turn on | |
| Enable | Disable | Disable | Enable | Turn off | w/o Link ECC | Turn on | 1 |
| Enable | Disable | Enable | Disable | Turn off | w/o Link ECC | Turn on | |
| Enable | Disable | Enable | Enable | Turn off | w/o Link ECC | Turn on | 1 |
| Enable | Enable | Disable | Disable | Turn off | w/o Link ECC | Turn on | |
| Enable | Enable | Disable | Enable | Turn off | w/o Link ECC | Turn on | 1 |
| Enable | Enable | Enable | Disable | Turn off | w/o Link ECC | Turn on | |
| Enable | Enable | Enable | Enable | Turn off | w/o Link ECC | Turn on | 1 |

NOTE 1 CAS command with DC0, DC1, DC2 and/or DC3=1 is inhibited during Read/Write-based WCK-RDQS_t Training mode: MR26 OP[7]=$1_B$.

**Table 54 - DMI behavior and Read Latencies for Read/Write-based WCK-RDQS_t Training**

| Function | | | DMI Output Driver | Read Latencies | | Note |
|---|---|---|---|---|---|---|
| Read DBI MR3 OP[6] | Read Link ECC MR22 OP[7:6] | Read Data Copy MR21 OP[5] | | x16 | x8 | |
| Disable | Disable | Disable | Turn off | Set 0 | Set 1 | 1 |
| Disable | Disable | Enable | Turn on (Follows Data Copy Definition) | Set 1 | Set 2 | 1 |
| Disable | Enable | Disable | Turn on (Follows Read Link ECC Definition) | Set 0 | Set 1 | 2 |
| Disable | Enable | Enable | Prohibited setting | N/A | N/A | |
| Enable | Disable | Disable | Turn on (Read DBI Data output) | Set 1 | Set 2 | 1 |
| Enable | Disable | Enable | Turn on (Follows Data Copy Definition) | Set 1 | Set 2 | 1 |
| Enable | Enable | Disable | Prohibited setting | N/A | N/A | |
| Enable | Enable | Enable | Prohibited setting | N/A | N/A | |

NOTE 1 For Read latency set, refer to the table where Read Link ECC function is disabled.
NOTE 2 For Read latency set, refer to the table where Read Link ECC function is enabled

# 5 Simplified LPDDR5 State Diagram

LPDDR5 SDRAM state diagram provides a simplified illustration of allowed state transitions and the related commands to control them. For a complete definition of the device behavior, the information provided by the state diagram should be integrated with the truth tables and timing specification.

The truth tables provide complementary information to the state diagram; they clarify the device behavior and the applied restrictions when considering the actual state of all banks.

For the command definition, see 7.1.1.

## 5 Simplified LPDDR5 State Diagram (Cont'd)

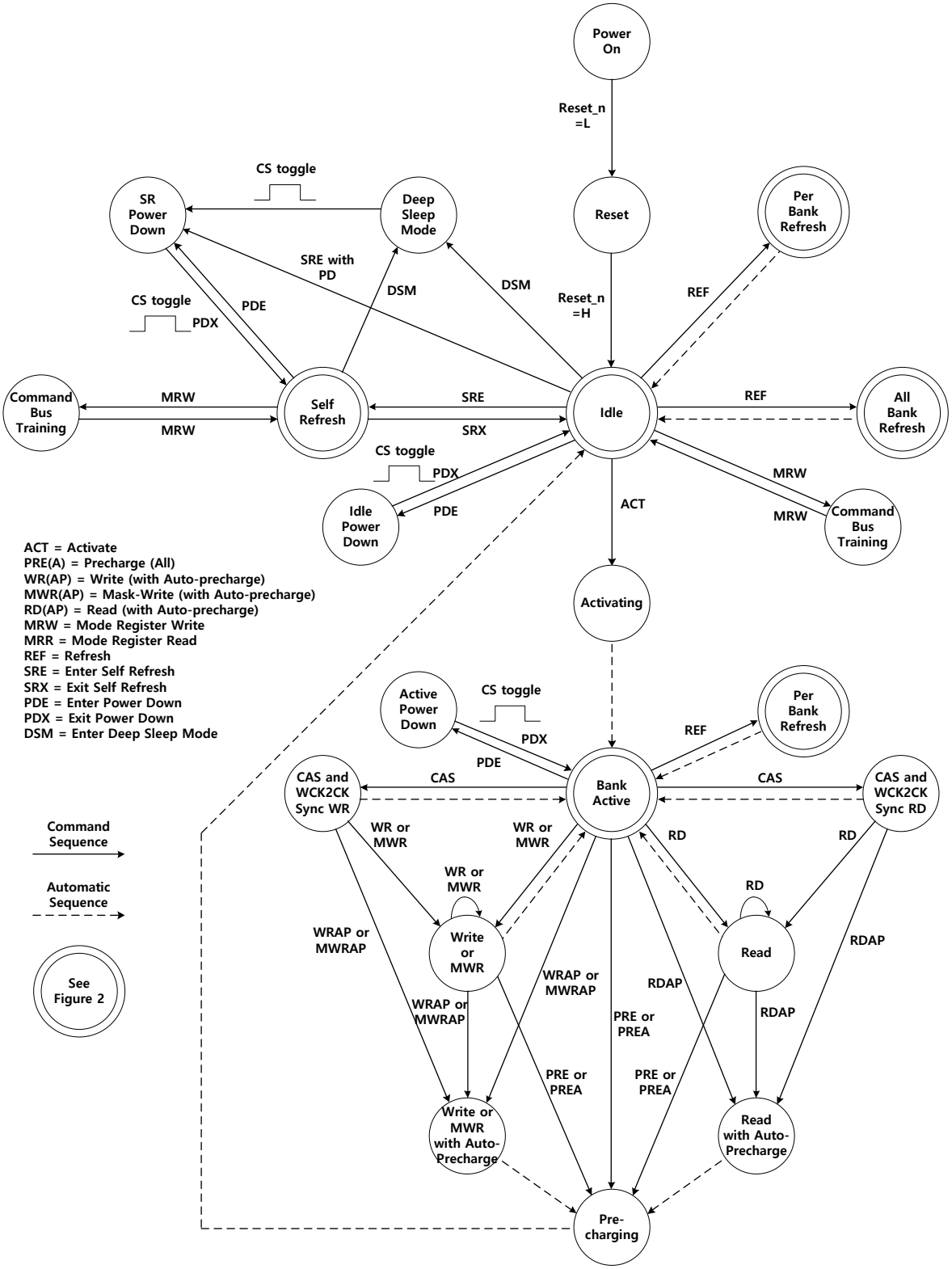


**Figure 60 — LPDDR5: Simplified Bus Interface State Diagram**

## 5 Simplified LPDDR5 State Diagram (Cont'd)

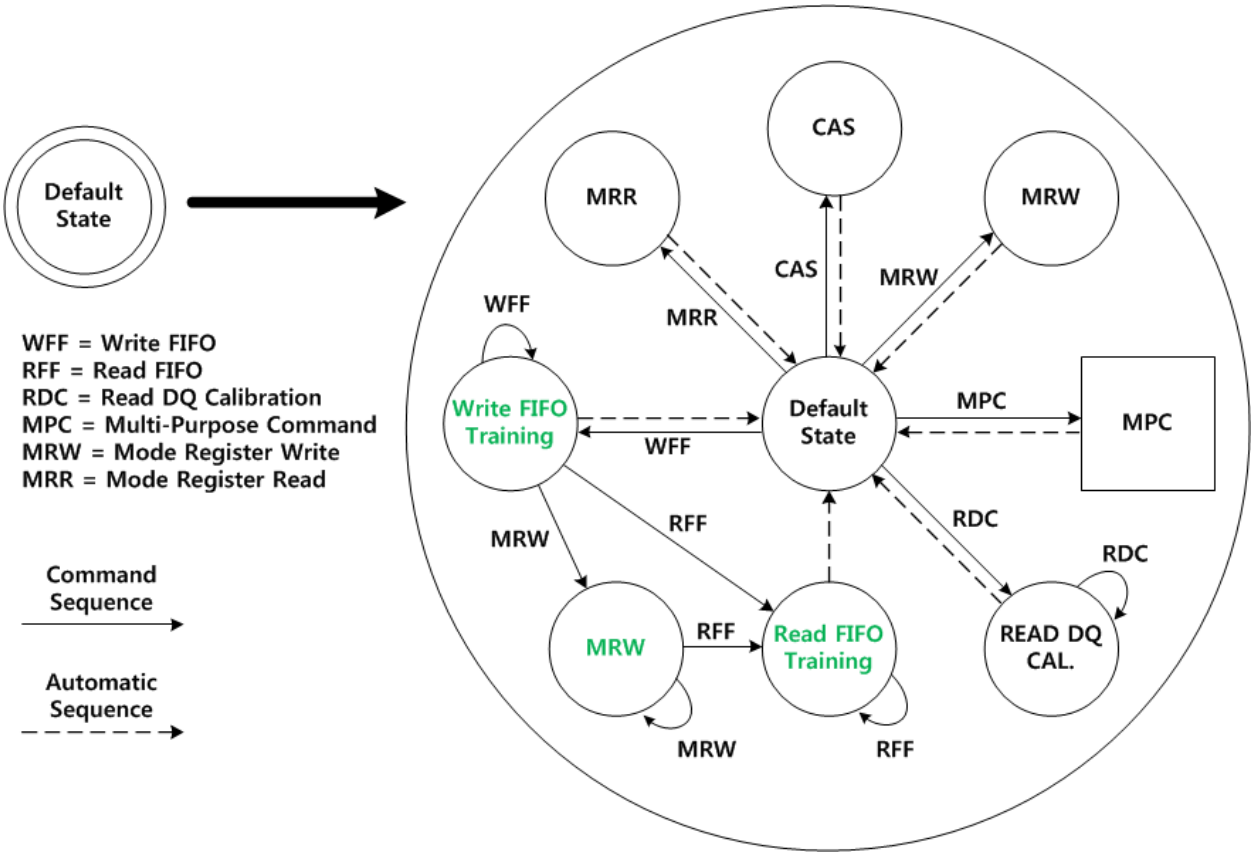


**Figure 61 — Sub-State Diagram-1 related with MRR, MRW, CAS, WFF, RFF, RDC and MPC Command**

## 5 Simplified LPDDR5 State Diagram (Cont'd)

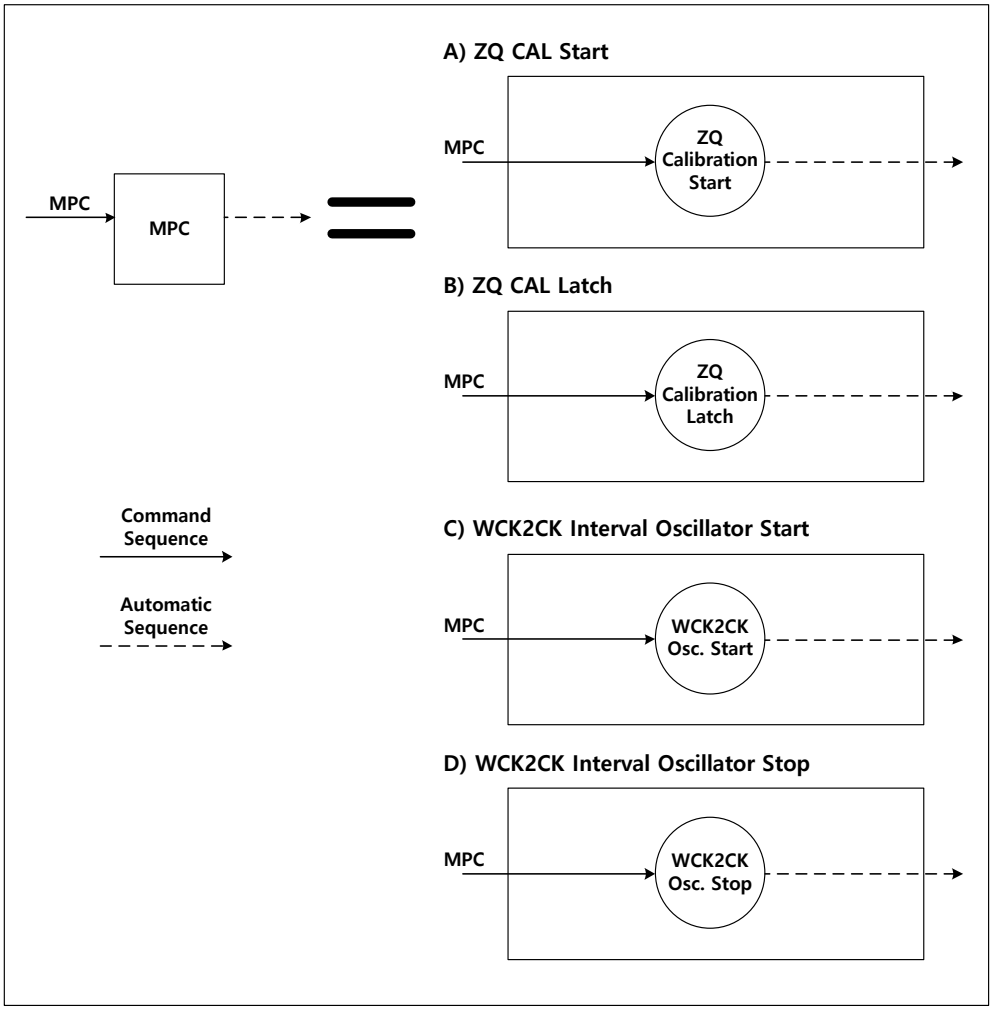


**Figure 62 — Sub-State Diagram-2: related with MPC State**

## 5 Simplified LPDDR5 State Diagram (Cont'd)

NOTE 1 From the Self-Refresh state the device can enter Power-Down, MRR, MRW, MPC and Deep Sleep Mode states. See 7.5.4, on Self-Refresh, for more information.

NOTE 2 In IDLE state, all banks are pre-charged.

NOTE 3 In the case of a MRW command to enter a training mode, the state machine will not automatically return to the IDLE state at the conclusion of training. See 7.6.2, on Mode Register Write (MRW), for more information.

NOTE 4 In the case of a MPC command to enter a training mode, the state machine may not automatically return to the IDLE state at the conclusion of training. See 7.6.13, on Multi-Purpose Command (MPC), for more information.

NOTE 5 This simplified State Diagram is intended to provide an overview of the possible state transitions and the commands to control them. In particular, situations involving more than one bank, the enabling or disabling of on-die termination, and some other events are not captured in full detail.

NOTE 6 States that have an "automatic return" and can be accessed from more than one prior state (e.g., MRW from either idle of Active states) will return to the state from when they were initiated (e.g., MRW from Idle will return to Idle).

NOTE 7 The RESET_n pin can be asserted from any state, and will cause the SDRAM to go to the Reset State. The diagram shows RESET state applied from the Power-On as an example, but the Diagram should not be construed as a restriction on RESET_n.

NOTE 8 Bank Active state can enter "CAS and WCK2CK Sync WR", "CAS and WCK2CK Sync RD" State for WCK-to-CK Synchronization, Non-Target ODT setting or Burst Length setting if it is needed.

NOTE 9 Deep Sleep Mode state can enter Self-Refresh Power Down state toggling CS (VDD2H level). See 7.5.8 for more information on Deep Sleep Mode.

NOTE 10 CAS command is the stand alone command.

NOTE 11 "Bank Active" to "Per-Bank Refresh" transition only refers to different banks not the same bank.

NOTE 12 Only MRW commands for MR16 OP[1:0]: FSP-WR, OP[3:2]: FSP-OP, OP[6]: VRCG and MR14 OP[6:0]:VREF(DQ[7:0]) and MR15 OP[6:0]:VREF(DQ[15:8]) are allowed from WRITE FIFO command to READ FIFO command.

# 6 Mode Register Definition

## 6.1 Mode Register Assignment and Definition in LPDDR5 SDRAM

Table 55 shows the mode registers for LPDDR5 SDRAM. Each register is denoted as “R” if it can be read but not written, “W” if it can be written but not read, and “R/W” if it can be read and written. A Mode Register Read command is used to read a mode register. A Mode register Write command is used to write a mode register. LPDDR5 device provides additional MRR capability to some write-only Mode Registers containing important memory system configuration and status info. Mode Register 1, 3, 11, 16, 17, 37, and 40 can be read by issuing a Mode Register Read (MRR) command.

**Table 55 - Table 1. Mode Register Assignment in LPDDR5 SDRAM**

| MR# | MA[6:0] | Access | OP[7] | OP[6] | OP[5] | OP[4] | OP[3] | OP[2] | OP[1] | | OP[0] |
|---|---|---|---|---|---|---|---|---|---|---|---|
| 0 | 00H | R | RFU | RFU | Unified NT-ODT Behavior | DMI Ouput Behavior Mode | Optimized Refresh Mode | Enhanced WCK Always On Mode | Latency Mode | | NT-ODT DQ/RDQS Timing Separation |
| 1 | 01H | R/W | WL | | | | CK Mode | | RFU | | |
| | | | WL | | | | CK Mode | | | | |
| | | | WL | | | | CK Mode | | | | |
| 2 | 02H | W | nWR | | | | | RL and nRBTP | | | |
| | | | nWR | | | | | RL and nRBTP | | | |
| | | | nWR | | | | | RL and nRBTP | | | |
| 3 | 03H | R/W | DBI-WR | DBI-RD | WLS | BK/BG ORG | | PDDS | | | |
| | | | DBI-WR | DBI-RD | WLS | BK/BG ORG | | PDDS | | | |
| | | | DBI-WR | DBI-RD | WLS | BK/BG ORG | | PDDS | | | |
| 4 | 04H | R | TUF | ZQ Master | ZQUF | | Refresh Multiplier | | | | |
| 5 | 05H | R | | LPDDR5 Manufacturer ID | | | | | | | |
| 6 | 06H | R | | Revision ID-1 | | | | | | | |
| 7 | 07H | R | | Revision ID-2 | | | | | | | |
| 8 | 08H | R | IO Width | | Density | | | | | Type | |
| 9 | 09H | W | | Vendor Specific Test Register | | | | | | | |
| 10 | 0AH | W | RDQS PST | | RDQS PRE | | WCK PST | RFU | | | RPST Mode |
| | | | RDQS PST | | RDQS PRE | | WCK PST | | | | RPST Mode |
| | | | RDQS PST | | RDQS PRE | | WCK PST | | | | RPST Mode |
| 11 | 0BH | R/W | RFU | CA ODT | | | NT ODT | | DQ ODT | | |
| | | | | CA ODT | | | NT ODT | | DQ ODT | | |
| | | | | CA ODT | | | NT ODT | | DQ ODT | | |
| 12 | 0CH | R/W | VBS | | $V_{REF}$(CA) | | | | | | |
| | | | | | $V_{REF}$(CA) | | | | | | |
| | | | | | $V_{REF}$(CA) | | | | | | |

| MR# | MA[6:0] | Access | OP[7] | OP[6] | OP[5] | OP[4] | OP[3] | OP[2] | OP[1] | OP[0] |
|---|---|---|---|---|---|---|---|---|---|---|
| 13 | $0D_H$ | W | Dual VDD2 | CBT Mode | DMD | DMI Ouput Behavior Mode | RFU | VRO | Thermal Offset | |
| 14 | $0E_H$ | R/W | VDLC | $V_{REF}$(DQ[7:0]) | | | | | | |
| | | | | $V_{REF}$(DQ[7:0]) | | | | | | |
| | | | | $V_{REF}$(DQ[7:0]) | | | | | | |
| 15 | $0F_H$ | R/W | RFU | $V_{REF}$(DQ[15:8]) | | | | | | |
| | | | | $V_{REF}$(DQ[15:8]) | | | | | | |
| | | | | $V_{REF}$(DQ[15:8]) | | | | | | |
| 16 | $10_H$ | R/W | CBT-PH | VRCG | CBT | | FSP-OP | | FSP-WR | |
| 17 | $11_H$ | R/W | x8 ODTD Upper | x8 ODTD Lower | ODTD-CA | ODTD-CS | ODTD-CK | SOC ODT | | |
| | | | | | ODTD-CA | ODTD-CS | ODTD-CK | SOC ODT | | |
| | | | | | ODTD-CA | ODTD-CS | ODTD-CK | SOC ODT | | |
| 18 | $12_H$ | W | CKR | WCK2CK Leveling | RFU | WCK ON | WCK_FM | WCK ODT | | |
| | | | CKR | | | WCK ON | WCK_FM | WCK ODT | | |
| | | | CKR | | | WCK ON | WCK_FM | WCK ODT | | |
| 19 | $13_H$ | R/W | RFU | | WCK2DQ OSC FM support | WCK2DQ OSC FM | DVFSQ | DVFSC | | |
| | | | | | | WCK2DQ OSC FM | DVFSQ | DVFSC | | |
| | | | | | | WCK2DQ OSC FM | DVFSQ | DVFSC | | |
| 20 | $14_H$ | W | RDC DQ Mode | RDC DMI Mode | MRWDU | MRWDL | WCK Mode | RDQS | | |
| | | | | | | | WCK Mode | RDQS | | |
| | | | | | | | WCK Mode | RDQS | | |
| 21 | $15_H$ | R/W | WXS | WXFE | RDCFE | WDCFE | ODT-CSFS | WXFS | RDCFS | WDCFS |
| 22 | $16_H$ | W | RECC | | WECC | | RFU | | | |
| | | | RECC | | WECC | | | | | |
| | | | RECC | | WECC | | | | | |
| 23 | $17_H$ | W | PASR Segment Mask | | | | | | | |
| 24 | $18_H$ | R/W | DFE Support | DFE Quantity for Upper Byte | | | RFU | DFE Quantity for Lower Byte | | |
| | | | | DFE Quantity for Upper Byte | | | | DFE Quantity for Lower Byte | | |
| | | | | DFE Quantity for Upper Byte | | | | DFE Quantity for Lower Byte | | |
| 25 | $19_H$ | W | Optimized Refresh Enable | PARC | CA Inputs TERM | CK pair TERM | RFU | | | |
| 26 | $1A_H$ | R/W | RDQSTFE | RDQSTFS | DCMU1 | DCMU0 | DCML1 | DCML0 | DCM Flip | DCM Start/ Stop |
| 27 | $1B_H$ | R | RAAMULT | | RAAIMT | | | | | RFM |
| 28 | $1C_H$ | W | RFU | | ZQ Mode | RFU | ZQ interval | | ZQ Stop | ZQ Reset |
| 29 | $1D_H$ | R | PPR Resource | | | | | | | |
| 30 | $1E_H$ | W | DCA for Upper byte | | | | DCA for Lower byte | | | |
| | | | DCA for Upper byte | | | | DCA for Lower byte | | | |
| | | | DCA for Upper byte | | | | DCA for Lower byte | | | |

| MR# | MA[6:0] | Access | OP[7] | OP[6] | OP[5] | OP[4] | OP[3] | OP[2] | OP[1] | OP[0] |
|---|---|---|---|---|---|---|---|---|---|---|
| 31 | $1F_H$ | W | Lower-Byte per-bit control Register for DQ Calibration | | | | | | | |
| 32 | $20_H$ | W | Upper-Byte per-bit control Register for DQ Calibration | | | | | | | |
| 33 | $21_H$ | W | DQ Calibration Pattern “A” | | | | | | | |
| 34 | $22_H$ | W | DQ Calibration Pattern “B” | | | | | | | |
| 35 | $23_H$ | R | WCK2DQI Oscillator Count - LSB | | | | | | | |
| 36 | $24_H$ | R | WCK2DQI Oscillator Count - MSB | | | | | | | |
| 37 | $25_H$ | R/W | WCK2DQI interval timer run time setting | | | | | | | |
| 38 | $26_H$ | R | WCK2DQO Oscillator Count - LSB | | | | | | | |
| 39 | $27_H$ | R | WCK2DQO Oscillator Count - MSB | | | | | | | |
| 40 | $28_H$ | R/W | WCK2DQO interval timer run time setting | | | | | | | |
| 41 | $29_H$ | W | NT DQ ODT<br>NT DQ ODT<br>NT DQ ODT | | | PPRE | RFU | | | |
| 42 | $2A_H$ | W | PPR KEY Protection | | | | | | | |
| 43 | $2B_H$ | R | DBE_flag | SBEC_Rule | SBE_count | | | | | |
| 44 | $2C_H$ | R | Data ECC Syndrome | | | | | | | |
| 45 | $2D_H$ | R | Data ECC Syndrome | Error Byte Lane | DMI ECC Syndrome | | | | | |
| 46 | $2E_H$ | W | RFU | | | | | FIFO RDQS Training | RDQS Toggle | Enhanced RDQS |
| 47 | $2F_H$ | R | Serial ID-1 | | | | | | | |
| 48 | $30_H$ | R | Serial ID-2 | | | | | | | |
| 49 | $31_H$ | R | Serial ID-3 | | | | | | | |
| 50 | $32_H$ | R | Serial ID-4 | | | | | | | |
| 51 | $33_H$ | R | Serial ID-5 | | | | | | | |
| 52 | $34_H$ | R | Serial ID-6 | | | | | | | |
| 53 | $35_H$ | R | Serial ID-7 | | | | | | | |
| 54 | $36_H$ | R | Serial ID-8 | | | | | | | |
| 55 | $37_H$ | N/A | DNU (Do Not Use) | | | | | | | |
| 56 | $38_H$ | W | Valid 0 or 1 | | | | | | | |
| 57 | $39_H$ | R/W | RFU | RFMSBC | | | RFMSB | | RAADEC | |
| 58:59 | $3A_H$:$3B_H$ | N/A | DNU (Do Not Use) | | | | | | | |
| 60 | $3C_H$ | W | Valid 0 or 1 | | | | | | | |
| 61:63 | $3D_H$:$3F_H$ | N/A | DNU (Do Not Use) | | | | | | | |

| | |
|---|---|
| | Applied when FSP=0 |
| | Applied when FSP=1 |
| | Applied when FSP=2 |

NOTE 1 RFU bits shall be set to '0' during writes.
NOTE 2 All mode registers that are specified as RFU or write-only shall return undefined data when read.
NOTE 3 All mode registers that are specified as RFU should not be written.
NOTE 4 Writes to read-only registers shall have no impact on the functionality of the device.
NOTE 5 In order to guarantee proper operation, all mode registers that can be written shall be set to specified data, except "Reserved" and "RFU".

## 6.2 Mode Register Definition

### 6.2.1 Mode Register definition

**Table 56 - MR0 Register Information (MA [7:0] = $00_H$)**

| OP[7] | OP[6] | OP[5] | OP[4] | OP[3] | OP[2] | OP[1] | OP[0] |
|---|---|---|---|---|---|---|---|
| RFU | RFU | Unified NT-ODT Behavior | DMI Ouput Behavior Mode | Optimized Refresh Mode | Enhanced WCK Always On Mode | Latency Mode | NT-ODT DQ/RDQS Timing Separation |

**Table 57 - MR0 definition**

| Function | Register Type | Operand | Data | Notes |
|---|---|---|---|---|
| NT-ODT DQ/RDQS Timing Separation | Read only | OP[0] | $0_B$: Device supports same DQ/RDQS NT-ODT Timing<br>$1_B$: Device supports separated DQ/RDQS NT-ODT Timing | 2 |
| Latency Mode | | OP[1] | $0_B$: Device supports X16 mode latency<br>$1_B$: Device supports byte mode latency | 1 |
| Enhanced WCK Always-On Mode | | OP[2] | $0_B$: Device does not support Enhanced WCK Always-ON mode.<br>$1_B$: Device supports Enhanced WCK Always-ON mode. | 3 |
| Optimized Refresh Mode | | OP[3] | $0_B$: Device does not support Optimized Refresh mode<br>$1_B$: Device supports Optimized Refresh mode. | 4 |
| DMI Ouput Behavior Mode | | OP[4] | $0_B$: Device only supports DMI Behavior mode1<br>$1_B$: Device supports both DMI Behavior mode1, 2 and mode selection. | 5 |
| Unified NT-ODT Behavior | | OP[5] | $0_B$: The NT-ODT behavior does not follow the unified NT-ODT behavior.<br>$1_B$: The NT-ODT behavior follows the unified NT-ODT behavior. | 6 |

NOTE 1. Byte mode devices only support byte mode latency.

NOTE 2. LPDDR5 SDRAM supports Separte DQ/RDQS NT-ODT timing as an optional feature. See “NT-ODT behavior for Read Operation” section.

NOTE 3. Enhanced WCK Always On mode is an optional feature. See “Enhanced WCK Always On Mode” section.

NOTE 4. Optimized Refresh is an optional feature for Self Refresh mode. See “Optimized Refresh” section.

NOTE 5. DMI Behavior Mode 2 and DMI Behavior Mode selection at Read FIFO and Read DQ Calibration is an optional feature. DMI Behavior Mode can be selected by MR13 OP[4]. See “DMI Output Behavior Mode” section.

NOTE 6. Unified NT-ODT behaivor is an optional feature. See “NT-ODT behavior unification” section.

**Table 58 - MR1 Register Information (MA[5:0] = $01_H$)**

| OP[7] | OP[6] | OP[5] | OP[4] | OP[3] | OP[2] | OP[1] | OP[0] |
|---|---|---|---|---|---|---|---|
| WL | | | | CK Mode | RFU | RFU | RFU |

**Table 59 - MR1 definition**

<table>
<tr><th>Function</th><th>Register Type</th><th>Operand</th><th>Data</th><th>Notes</th></tr>
<tr><td>CK mode</td><td rowspan="2">Read /Write</td><td>OP[3]</td><td>$0_B$: Differential (Default)<br>$1_B$: Single Ended</td><td>1,2,3</td></tr>
<tr><td>WL<br>(Write Latency)</td><td>OP[7:4]</td><td>WL (x16/ch and x8/ch, DVFSC disable)
<table>
<tr><th>OP[7:4]</th><th>WCK:CK</th><th>Set A</th><th>Set B</th></tr>
<tr><td>$0000_B$</td><td rowspan="6">2:1</td><td>4</td><td>4</td></tr>
<tr><td>$0001_B$</td><td>4</td><td>6</td></tr>
<tr><td>$0010_B$</td><td>6</td><td>8</td></tr>
<tr><td>$0011_B$</td><td>8</td><td>10</td></tr>
<tr><td>$0100_B$</td><td>8</td><td>14</td></tr>
<tr><td>$0101_B$</td><td>10</td><td>16</td></tr>
<tr><td>$0000_B$ (default)</td><td rowspan="12">4:1</td><td>2</td><td>2</td></tr>
<tr><td>$0001_B$</td><td>2</td><td>3</td></tr>
<tr><td>$0010_B$</td><td>3</td><td>4</td></tr>
<tr><td>$0011_B$</td><td>4</td><td>5</td></tr>
<tr><td>$0100_B$</td><td>4</td><td>7</td></tr>
<tr><td>$0101_B$</td><td>5</td><td>8</td></tr>
<tr><td>$0110_B$</td><td>6</td><td>9</td></tr>
<tr><td>$0111_B$</td><td>6</td><td>11</td></tr>
<tr><td>$1000_B$</td><td>7</td><td>12</td></tr>
<tr><td>$1001_B$</td><td>8</td><td>14</td></tr>
<tr><td>$1010_B$</td><td>9</td><td>15</td></tr>
<tr><td>$1011_B$</td><td>9</td><td>16</td></tr>
</table>
All others are RFU<br><br>WL (x16/ch and x8/ch, DVFSC enable)
<table>
<tr><th>OP[7:4]</th><th>WCK:CK</th><th>Set A</th><th>Set B</th></tr>
<tr><td>$0000_B$</td><td rowspan="3">2:1</td><td>4</td><td>4</td></tr>
<tr><td>$0001_B$</td><td>4</td><td>6</td></tr>
<tr><td>$0010_B$</td><td>6</td><td>8</td></tr>
<tr><td>$0000_B$ (default)</td><td rowspan="3">4:1</td><td>2</td><td>2</td></tr>
<tr><td>$0001_B$</td><td>2</td><td>3</td></tr>
<tr><td>$0010_B$</td><td>3</td><td>4</td></tr>
</table>
All others are RFU</td><td>2,3,4,5</td></tr>
</table>

NOTE 1 When MR1 OP[3]= 1B, CK_t is used as CK timing and CK_c is set to a valid logic state.

NOTE 2 There are three physical registers assigned to each bit of this MR parameter, designated set point 0, set point 1 and set point 2. Only the registers for the set point determined by the state of the FSP-WR bit (MR16 OP[1:0]) will be written to with an MRW command to this MR address.

NOTE 3 There are three physical registers assigned to each bit of this MR parameter, designated set point 0 , set point 1 and set point 2. The device will operate only according to the values stored in the registers for the active set point, i.e., the set point determined by the state of the FSP-OP bit (MR16 OP[3:2]). The values in the registers for the inactive set point will be ignored by the device, and may be changed without affecting device operation.

NOTE 4 The Write Latency applies regardless of the following function setting: (Disable/Enable)

Byte Mode, Write DBI, Write Data Copy and Link ECC

NOTE 5 Write Latency Set "A" and Set "B" is determined by MR3 OP[5]. When MR3 OP[5]=0, then Write Latency Set "A" should be used. When MR3 OP[5]=1, then Write Latency Set "B" should be used.

**Table 60 - MR2 Register Information (MA [6:0] = $02_H$)**

| OP[7] | OP[6] | OP[5] | OP[4] | OP[3] | OP[2] | OP[1] | OP[0] |
|---|---|---|---|---|---|---|---|
| nWR | | | | RL and nRBTP | | | |

**Table 61 - MR2 Register definition**

<table>
<tr><th>Function</th><th>Register Type</th><th>Operand</th><th>Data</th><th>Notes</th></tr>
<tr><td>RL (Read latency) and nRBTP (Read Burst end to Precharge delay)</td><td>Write-only</td><td>OP[3:0]</td><td>RL and nRBTP<br>(Link ECC off case, DVFSC disable)
<table>
<tr><th>OP[3:0]</th><th>WCK:CK Ratio</th><th>RL Set 0</th><th>RL Set 1</th><th>RL Set 2</th><th>nRBTP</th></tr>
<tr><td>$0000_B$ (Default)</td><td>2:1</td><td>6</td><td>6</td><td>6</td><td>0</td></tr>
<tr><td>$0001_B$</td><td>2:1</td><td>8</td><td>8</td><td>8</td><td>0</td></tr>
<tr><td>$0010_B$</td><td>2:1</td><td>10</td><td>10</td><td>12</td><td>0</td></tr>
<tr><td>$0011_B$</td><td>2:1</td><td>12</td><td>14</td><td>14</td><td>0</td></tr>
<tr><td>$0100_B$</td><td>2:1</td><td>16</td><td>16</td><td>18</td><td>2</td></tr>
<tr><td>$0101_B$</td><td>2:1</td><td>18</td><td>20</td><td>20</td><td>2</td></tr>
<tr><td>$0000_B$</td><td>4:1</td><td>3</td><td>3</td><td>3</td><td>0</td></tr>
<tr><td>$0001_B$</td><td>4:1</td><td>4</td><td>4</td><td>4</td><td>0</td></tr>
<tr><td>$0010_B$</td><td>4:1</td><td>5</td><td>5</td><td>6</td><td>0</td></tr>
<tr><td>$0011_B$</td><td>4:1</td><td>6</td><td>7</td><td>7</td><td>0</td></tr>
<tr><td>$0100_B$</td><td>4:1</td><td>8</td><td>8</td><td>9</td><td>1</td></tr>
<tr><td>$0101_B$</td><td>4:1</td><td>9</td><td>10</td><td>10</td><td>1</td></tr>
<tr><td>$0110_B$</td><td>4:1</td><td>10</td><td>11</td><td>12</td><td>2</td></tr>
<tr><td>$0111_B$</td><td>4:1</td><td>12</td><td>13</td><td>14</td><td>2</td></tr>
<tr><td>$1000_B$</td><td>4:1</td><td>13</td><td>14</td><td>15</td><td>3</td></tr>
<tr><td>$1001_B$</td><td>4:1</td><td>15</td><td>16</td><td>17</td><td>4</td></tr>
<tr><td>$1010_B$</td><td>4:1</td><td>16</td><td>17</td><td>19</td><td>4</td></tr>
<tr><td>$1011_B$</td><td>4:1</td><td>17</td><td>18</td><td>20</td><td>4</td></tr>
</table>
All others are RFU</td><td>1,2</td></tr>
</table>

Table 61 MR2 Register definition (Cont'd)

<table>
<tr><th>Function</th><th>Register Type</th><th>Operand</th><th>Data</th><th>Notes</th></tr>
<tr><td>RL (Read latency) and nRBTP (Read Burst end to Precharge delay)</td><td>Write-only</td><td>OP[3:0]</td><td>RL and nRBTP<br>(Link ECC off case, DVFSC enable)
<table>
<tr><th>OP[3:0]</th><th>WCK:CK Ratio</th><th>RL Set 0</th><th>RL Set 1</th><th>RL Set 2</th><th>nRBTP</th></tr>
<tr><td>0000 B</td><td>2:1</td><td>6</td><td>6</td><td>6</td><td>0</td></tr>
<tr><td>0001B</td><td>2:1</td><td>8</td><td>10</td><td>10</td><td>0</td></tr>
<tr><td>0010B</td><td>2:1</td><td>12</td><td>12</td><td>14</td><td>0</td></tr>
<tr><td>0000B</td><td>4:1</td><td>3</td><td>3</td><td>3</td><td>0</td></tr>
<tr><td>0001B</td><td>4:1</td><td>4</td><td>5</td><td>5</td><td>0</td></tr>
<tr><td>0010B</td><td>4:1</td><td>6</td><td>6</td><td>7</td><td>0</td></tr>
</table>
All others are RFU<br><br>RL and nRBTP<br>(Link ECC on case, DVFSC disabled)
<table>
<tr><th>OP[3:0]</th><th>WCK:CK Ratio</th><th>RL Set 0</th><th>RL Set 1</th><th>nRBTP</th></tr>
<tr><td>0110B</td><td>4:1</td><td>12</td><td>13</td><td>2</td></tr>
<tr><td>0111B</td><td>4:1</td><td>13</td><td>14</td><td>2</td></tr>
<tr><td>1000B</td><td>4:1</td><td>15</td><td>16</td><td>3</td></tr>
<tr><td>1001B</td><td>4:1</td><td>17</td><td>18</td><td>4</td></tr>
<tr><td>1010B</td><td>4:1</td><td>18</td><td>20</td><td>4</td></tr>
<tr><td>1011B</td><td>4:1</td><td>19</td><td>21</td><td>4</td></tr>
</table>
All others are RFU</td><td>1,2,4,5</td></tr>
</table>

Table 61 MR2 Register definition (Cont'd)

| Function | Register Type | Operand | Data | Notes |
|---|---|---|---|---|
| nWR<br>(Write recovery) | Write-only | OP[7:4] | Refer to Table 62 | 1,2,3 |

NOTE 1 There are three physical registers assigned to each bit of this MR parameter, designated set point 0, set point 1 and set point 2. Only the registers for the set point determined by the state of the FSP-WR bit (MR16 OP[1:0]) will be written to with an MRW command to this MR address.

NOTE 2 There are three physical registers assigned to each bit of this MR parameter, designated set point 0 , set point 1 and set point 2. The device will operate only according to the values stored in the registers for the active set point, i.e., the set point determined by the state of the FSP-OP bit (MR16 OP[3:2]). The values in the registers for the inactive set point will be ignored by the device, and may be changed without affecting device operation.

NOTE 3 The programmed value of nWR is the number of clock cycles the LPDDR5-SDRAM device uses to determine the starting point of an internal Pre-charge operation after a Write burst with AP (auto-pre-charge) enabled.

NOTE 4 Some Operating features can affect Read Latency: (Link ECC off case)

| Feature | Description |
|---|---|
| 1 | Byte Mode |
| 2 | Read DBI and/or Read Data Copy |

RL Set 0 applies when no features are enabled
RL Set 1 applies when one feature is enabled (1 or 2)
RL Set 2 applies when two features are enabled

NOTE 5 RL Set 1 applies when the device is byte-mode. (Link ECC on case)

## Table 62 - nWR Latency

| OP[7:4] | WCK:CK Ratio | nWR | | | | | | |
|---|---|---|---|---|---|---|---|---|
| | | x16 w/o DVFSC w/o Link ECC | x8 w/o DVFSC w/o Link ECC | x16 w/o DVFSC w/ Link ECC | x8 w/o DVFSC w/ Link ECC | x16 w/ DVFSC w/o Link ECC | x8 w/ DVFSC w/o Link ECC | Unit |
| $0000_B$ (Default) | 2:1 | 5 | 5 | N/A | N/A | 6 | 6 | nCK |
| $0001_B$ | 2:1 | 10 | 10 | N/A | N/A | 11 | 12 | nCK |
| $0010_B$ | 2:1 | 14 | 15 | N/A | N/A | 17 | 18 | nCK |
| $0011_B$ | 2:1 | 19 | 20 | N/A | N/A | N/A | N/A | nCK |
| $0100_B$ | 2:1 | 24 | 25 | N/A | N/A | N/A | N/A | nCK |
| $0101_B$ | 2:1 | 28 | 29 | N/A | N/A | N/A | N/A | nCK |
| $0000_B$ | 4:1 | 3 | 3 | N/A | N/A | 3 | 3 | nCK |
| $0001_B$ | 4:1 | 5 | 5 | N/A | N/A | 6 | 6 | nCK |
| $0010_B$ | 4:1 | 7 | 8 | N/A | N/A | 9 | 9 | nCK |
| $0011_B$ | 4:1 | 10 | 10 | N/A | N/A | N/A | N/A | nCK |
| $0100_B$ | 4:1 | 12 | 13 | N/A | N/A | N/A | N/A | nCK |
| $0101_B$ | 4:1 | 14 | 15 | N/A | N/A | N/A | N/A | nCK |
| $0110_B$ | 4:1 | 16 | 17 | 18 | 19 | N/A | N/A | nCK |
| $0111_B$ | 4:1 | 19 | 20 | 21 | 22 | N/A | N/A | nCK |
| $1000_B$ | 4:1 | 21 | 22 | 23 | 24 | N/A | N/A | nCK |
| $1001_B$ | 4:1 | 24 | 25 | 27 | 28 | N/A | N/A | nCK |
| $1010_B$ | 4:1 | 26 | 28 | 29 | 31 | N/A | N/A | nCK |
| $1011_B$ | 4:1 | 28 | 29 | 31 | 32 | N/A | N/A | nCK |

**Table 63 — MR3 Register Information (MA[7:0] = $03_H$)**

| OP[7] | OP[6] | OP[5] | OP[4] | OP[3] | OP[2] | OP[1] | OP[0] |
|---|---|---|---|---|---|---|---|
| DBI-WR | DBI-RD | WLS | BK/BG ORG | | PDDS | | |

**Table 64 — MR3 Definition**

| Function | Register Type | Operand | Data | Notes |
|---|---|---|---|---|
| PDDS<br>(Pull-Down Drive Strength) | Write-only | OP[2:0] | $000_B$: RFU<br>$001_B$: RZQ/1<br>$010_B$: RZQ/2<br>$011_B$: RZQ/3<br>$100_B$: RZQ/4<br>$101_B$: RZQ/5<br>$110_B$: RZQ/6 (default)<br>$111_B$: Reserved | 1,2,3 |
| BK/BG ORG<br>(Bank/Bank Group Organization) | | OP[4:3] | $00_B$: BG Mode<br>$01_B$: 8B Mode<br>$10_B$: 16B Mode (default)<br>$11_B$: Reserved | 2,3,5,6 |
| WLS (Write Latency Set) | | OP[5] | $0_B$: Write Latency Set “A” (default)<br>$1_B$: Write Latency Set “B” | 2,3 |
| DBI-RD<br>(DBI-Read select) | | OP[6] | $0_B$: Disabled (default)<br>$1_B$: Read DBI-DC Enabled | 2,3 |
| DBI-WR<br>(DBI-Write select) | | OP[7] | $0_B$: Disabled (default)<br>$1_B$: Write DBI-DC Enabled | 2,3,4 |

NOTE 1 All values are "typical". The actual value after calibration will be within the specified tolerance for a given voltage and temperature. Re-calibration may be required as voltage and temperature vary.

NOTE 2 There are three physical registers assigned to each bit of this MR parameter, designated set point 0, set point 1, and set point 2. Only the registers for the set point determined by the state of the FSP-WR bit (MR16 OP[1:0]) will be written to with an MRW command to this MR address.

NOTE 3 There are three physical registers assigned to each bit of this MR parameter, designated set point 0, set point 1, and set point 2. The device will operate only according to the values stored in the registers for the active set point, i.e., the set point determined by the state of the FSP-OP bit (MR16 OP[3:2]). The values in the registers for the inactive set point will be ignored by the device, and may be changed without affecting device operation.

NOTE 4 Masked Write must use DBI DC only. For more details concerning masked writes with DBI enabled, refer to 7.4.10 for information on data bus inversion.

NOTE 5 16B Mode with DVFSC enabled can support up to 1600Mbps (≤1600Mbps). Please refer to operating frequency table in 2.2.5.

NOTE 6 The supported operation data rate for each Bank/Bank Group Organization is as follows.

- BG Mode for more than 3200Mbps (>3200Mbps).
- 8B Mode for all data rate range.
- 16B Mode for equal or less than 3200Mbps (≤3200Mbps).

**Table 65 MR4 Register Information (MA[7:0] = $04_H$)**

| OP[7] | OP[6] | OP[5] | OP[4] | OP[3] | OP[2] | OP[1] | OP[0] |
|---|---|---|---|---|---|---|---|
| TUF | ZQ Master | ZQUF | RM | | | | |

**Table 66 - MR4 definition**

| Function | Register Type | Operand | Data | Notes |
|---|---|---|---|---|
| Refresh Multiplier (RM) | Read-only | OP[4:0] | $00000_B$: SDRAM Low temperature operating limit exceeded<br>$00001_B$: 8x<br>$00010_B$: 6x<br>$00011_B$: 4x<br>$00100_B$: 3.3x<br>$00101_B$: 2.5x<br>$00110_B$: 2.0x<br>$00111_B$: 1.7x<br>$01000_B$: 1.3x<br>$01001_B$: 1x<br>$01010_B$: 0.7x<br>$01011_B$: 0.5x<br>$01100_B$: 0.25x, no de-rating<br>$01101_B$: 0.25x, with de-rating<br>$01110_B$: 0.125x, no de-rating<br>$01111_B$: 0.125x, with de-rating<br>$11111_B$: SDRAM High temperature operating limit exceeded<br>All others are reserved. | 1,2,3,4,6,7 |
| ZQUF (ZQ Update Flag) | | OP[5] | $0_B$: No change in calibration code since previous ZQ Latch command<br>$1_B$: Calibration code has changed since previous ZQ Latch command | 8 |
| ZQ Master | | OP[6] | $0_B$: Not a master die<br>$1_B$: Master die for ZQ Calibration purposes | 9,10 |
| TUF (Temperature Update Flag) | | OP[7] | $0_B$: No change in OP[4:0] since last MR4 read<br>$1_B$: Change in OP[4:0] since last MR4 read (default) | 5,6,7 |

NOTE 1 The refresh rate for each MR4-OP[4:0] setting applies to tREFI, tREFIpb, and tREFW. OP[4:0]= $01001_B$ corresponds to a device temperature of 85°C. Other values require either a longer (1.3x, 8x) refresh interval at lower temperatures, or a shorter (0.7x, 0.125x) refresh interval at higher temperatures. If OP[4:0] is from $01010_B$ to $11111_B$, the device temperature is greater than 85°C.

NOTE 2 At higher temperatures (>85°C), AC timing derating may be required. If derating is required the LPDDR5-SDRAM will set OP[4:0]= $01101_B$ or $01111_B$. See derating timing requirements in Section 9.2, Table 375.

NOTE 3 DRAM vendors may or may not report all of the possible settings over the operating temperature range of the device. Each vendor guarantees that their device will work at any temperature within the range using the refresh interval requested by their device.

NOTE 4 The device may not operate properly when OP[4:0]=$00000_B$ or $11111_B$.
NOTE 5 When OP[7]=1, the refresh rate reported in OP[4:0] has changed since the last MR4 read. A mode register read from MR4 will reset OP[7] to '0'.
NOTE 6 OP[4:0] bits are indicated the latest Refresh Rate whenever OP[7]=$1_B$.
NOTE 7 See the section on "Temperature Sensor" for information on the recommended frequency of reading MR4.
NOTE 8 After Power up initialization and reset sequence have been completed ZQUF MR4 OP[5] indicate $0_B$.
NOTE 9 In command-based calibration mode, ZQCal Start commands only need to be issued to the ZQ Master die or dice to maintain accurate calibration. ZQCal Start commands received by non-ZQ Master die will be ignored. All die which share ZQ resources with a ZQ Master die that receives a valid ZQCal Start command will be calibrated. ZQCal Latch commands may be issued to each of these die after tZQCAL4, tZQCAL8 or tZQCAL16 has been met.
NOTE 10 LPDDR5 packages with more than one ZQ pin may include more than one ZQ Master die.

### 6.2.1 Mode Register definition (Cont'd)

**Table 67 — MR5 Register Information (MA[7:0] = $05_H$)**

| OP[7] | OP[6] | OP[5] | OP[4] | OP[3] | OP[2] | OP[1] | OP[0] |
|---|---|---|---|---|---|---|---|
| LPDDR5 Manufacturer ID | | | | | | | |

**Table 68 — MR5 Definition**

| Function | Register Type | Operand | Data | Notes |
|---|---|---|---|---|
| LPDDR5 Manufacturer ID | Read-only | OP[7:0] | See JEP166, LPDDR5 Manufacturer ID Codes | |

**Table 69 — MR6 Register Information (MA[7:0] = $06_H$)**

| OP[7] | OP[6] | OP[5] | OP[4] | OP[3] | OP[2] | OP[1] | OP[0] |
|---|---|---|---|---|---|---|---|
| Revision ID-1 | | | | | | | |

**Table 70 — MR6 Definition**

| Function | Register Type | Operand | Data | Notes |
|---|---|---|---|---|
| LPDDR5 Revision ID-1 | Read-only | OP[7:0] | $00000000_B$: A-version<br>$00000001_B$: B-version | 1 |

NOTE 1 MR6 is vendor specific.

**Table 71 — MR7 Register Information (MA[7:0] = $07_H$)**

| OP[7] | OP[6] | OP[5] | OP[4] | OP[3] | OP[2] | OP[1] | OP[0] |
|---|---|---|---|---|---|---|---|
| Revision ID-2 | | | | | | | |

**Table 72 — MR7 Definition**

| Function | Register Type | Operand | Data | Notes |
|---|---|---|---|---|
| LPDDR5 Revision ID-2 | Read-only | OP[7:0] | $00000000_B$: A-version<br>$00000001_B$: B-version | 1 |

NOTE 1 MR7 is vendor specific.

### 6.2.1 Mode Register definition (Cont'd)

**Table 73 — MR8 Register Information (MA[7:0] = $08_H$)**

| OP[7] | OP[6] | OP[5] | OP[4] | OP[3] | OP[2] | OP[1] | OP[0] |
|---|---|---|---|---|---|---|---|
| IO Width | | Density | | | | Type | |

**Table 74 — MR8 Definition**

| Function | Register Type | Operand | Data | Notes |
|---|---|---|---|---|
| Type | Read-only | OP[1:0] | $00_B$: S32 (32n pre-fetch/8Banks), S16 SDRAM (16n pre-fetch/4Banks 4Bank Groups), S16 SDRAM (16n pre-fetch /16 Banks)<br>All Others: Reserved | |
| Density | | OP[5:2] | $0000_B$: 2Gb<br>$0001_B$: 3Gb<br>$0010_B$: 4Gb<br>$0011_B$: 6Gb<br>$0100_B$: 8Gb<br>$0101_B$: 12Gb<br>$0110_B$: 16Gb<br>$0111_B$: 24Gb<br>$1000_B$: 32Gb<br>All Others: Reserved | |
| IO Width | | OP[7:6] | $00_B$: x16<br>$01_B$: x8<br>All Others: Reserved | |

**Table 75 — MR9 Register Information (MA[7:0] = $09_H$)**

| OP[7] | OP[6] | OP[5] | OP[4] | OP[3] | OP[2] | OP[1] | OP[0] |
|---|---|---|---|---|---|---|---|
| Vendor Specific Test Register | | | | | | | |

**Table 76 — MR9 Definition**

| Function | Register Type | Operand | Data | Notes |
|---|---|---|---|---|
| Vendor Specific Test Register | Write-only | OP[7:0] | Vendor Specific | 1 |

NOTE 1 Only $00_H$ should be written to this register.

### 6.2.1 Mode Register definition (Cont'd)

**Table 77 — MR10 Register Information (MA [7:0] = $0A_H$)**

| OP[7] | OP[6] | OP[5] | OP[4] | OP[3] | OP[2] | OP[1] | OP[0] |
|---|---|---|---|---|---|---|---|
| RDQS PST | | RDQS PRE | | WCK PST | | RFU | RPST Mode |

**Table 78 — MR10 Definition**

| Function | Register Type | Operand | Data | Notes |
|---|---|---|---|---|
| RDQS Post-amble mode | Write-only | OP[0] | $0_B$: Toggle Mode (default)<br>$1_B$: Static Mode | 1,2,3 |
| WCK PST (WCK Post-amble Length) | | OP[3:2] | $00_B$: 2.5*tWCK (default)<br>$01_B$: 4.5*tWCK<br>$10_B$: 6.5*tWCK<br>$11_B$: Reserved | 1,2,3,4,5 |
| RDQS PRE (RD Pre-amble Length) | | OP[5:4] | $00_B$: Static:4*tWCK,Toggle:0 (Default)<br>$01_B$: Static:2*tWCK,Toggle:2*tWCK<br>$10_B$: Static:0,Toggle:4*tWCK<br>$11_B$: Static:tRDQS_PRE, Toggle:4*tWCK | 1,2,3,6,7 |
| RDQS PST (RD Post-amble Length) | | OP[7:6] | $00_B$: 0.5*tWCK (Default)<br>$01_B$: 2.5*tWCK<br>$10_B$: 4.5*tWCK<br>$11_B$: Reserved | 1,2,3,4 |

NOTE 1 All units are tWCK.

NOTE 2 There are three physical registers assigned to each bit of this MR parameter, designated set point 0, set point 1, and set point 2. Only the registers for the set point determined by the state of the FSP-WR bit (MR16 OP[1:0]) will be written to with an MRW command to this MR address.

NOTE 3 There are three physical registers assigned to each bit of this MR parameter, designated set point 0, set point 1, and set point 2. The device will operate only according to the values stored in the registers for the active set point, i.e., the set point determined by the state of the FSP-OP bit (MR16 OP[3:2]). The values in the registers for the inactive set point will be ignored by the device, and may be changed without affecting device operation.

NOTE 4 tWCKPST length should be larger than tRPST length.

NOTE 5 WCK PST OP[3:2] applies to both read and write operation timing as same setting.

NOTE 6 OP[5:4]=$11_B$ can be supported over 3200Mbps operation and tRDQS_PRE is Min 2*tWCK and Max 4*tWCK.

NOTE 7 OP[5:4]=$00_B$/$01_B$/$10_B$ can be supported over all frequency range.

### 6.2.1 Mode Register definition (Cont'd)

**Table 79 - MR11 Register Information (MA[7:0] = $0B_H$)**

| OP[7] | OP[6] | OP[5] | OP[4] | OP[3] | OP[2] | OP[1] | OP[0] |
|---|---|---|---|---|---|---|---|
| RFU | CA ODT | | | NT-ODT Enable | DQ ODT | | |

**Table 80 - MR11 Definition**

| Function | Register Type | Operand | Data | Notes |
|---|---|---|---|---|
| DQ ODT<br>(DQ Bus Receiver On-Die-Termination) | Read/ Write | OP[2:0] | $000_B$: Disable (Default)<br>$001_B$: RZQ/1<br>$010_B$: RZQ/2<br>$011_B$: RZQ/3<br>$100_B$: RZQ/4<br>$101_B$: RZQ/5<br>$110_B$: RZQ/6<br>$111_B$: RFU | 1,2,3 |
| NT-ODT Enable<br>(Non Target ODT Enable) | | OP[3] | $0_B$: Non-Target ODT is disabled (Default)<br>$1_B$: Non-Target ODT is enabled | 2,3 |
| CA ODT<br>(CA Bus Receiver On-Die-Termination) | | OP[6:4] | $000_B$: Disable (Default)<br>$001_B$: RZQ/1<br>$010_B$: RZQ/2<br>$011_B$: RZQ/3<br>$100_B$: RZQ/4<br>$101_B$: RZQ/5<br>$110_B$: RZQ/6<br>$111_B$: RFU | 1,2,3 |

NOTE 1 All values are "typical". The actual value after calibration will be within the specified tolerance for a given voltage and temperature. Re-calibration may be required as voltage and temperature vary.

NOTE 2 There are three physical registers assigned to each bit of this MR parameter, designated set point 0, set point 1 and set point 2. Only the registers for the set point determined by the state of the FSP-WR bit (MR16 OP[1:0]) will be written to with an MRW command to this MR address.

NOTE 3 There are three physical registers assigned to each bit of this MR parameter, designated set point 0, set point 1 and set point 2. The device will operate only according to the values stored in the registers for the active set point, i.e., the set point determined by the state of the FSP-OP bit (MR16 OP[3:2]). The values in the registers for the inactive set point will be ignored by the device, and may be changed without affecting device operation.

### 6.2.1 Mode Register definition (Cont'd)

**Table 81 — MR12 Register Information (MA[5:0] = $0C_H$)**

| OP[7] | OP[6] | OP[5] | OP[4] | OP[3] | OP[2] | OP[1] | OP[0] |
|---|---|---|---|---|---|---|---|
| VBS | $V_{REF}$(CA) | | | | | | |

**Table 82 — MR12 Definition**

| Function | Register Type | Operand | Data | Notes |
|---|---|---|---|---|
| $V_{REF}$(CA)<br>($V_{REF}$(CA) Setting) | Read/ Write | OP[6:0] | $0000000_B$:<br>-- Thru --<br>$1111111_B$:<br>See table below | 1,2,3,4, 5,7 |
| VBS<br>($V_{REF}$(CA) Byte Select) | Write | OP[7] | $0_B$: Write the $V_{REF}$(CA) values to OP[6:0] for x16 device, and Byte mode device which is assigned lower byte: DQ[7:0].<br>$1_B$: Write the $_{VREF}$(CA) values to OP[6:0] for Byte mode device which is assigned upper byte: DQ[15:8]. | 6,7 |

NOTE 1 This register controls the VREF(CA) levels for Frequency-Set-Point[2:0].

NOTE 2 A read (MRR) to this register places the contents of OP[6:0] on DQ[6:0]. DQ[7] will read 0B. See 7.6.1 for more information on MRR Operation.

NOTE 3 A write to MR12 OP[6:0] sets the internal VREF(CA) level for FSP[0] when MR16 OP[1:0]=00B, sets FSP[1] when MR16 OP[1:0]=01B or sets FSP[2] when MR16 OP[1:0]=10B. The time required for VREF(CA) to reach the set level depends on the step size from the current level to the new level. See 4.2.2 for more information on VREF(CA) training.

NOTE 4 There are three physical registers assigned to each bit of this MR parameter, designated set point 0, set point 1, and set point 2. Only the registers for the set point determined by the state of the FSP-WR bit (MR16 OP[1:0]) will be written to with an MRW command to this MR address, or read from with an MRR command to this address.

NOTE 5 There are three physical registers assigned to each bit of this MR parameter, designated set point 0, set point 1, and set point 2. The device will operate only according to the values stored in the registers for the active set point, i.e., the set point determined by the state of the FSP-OP bit (MR16 OP[3:2]). The values in the registers for the inactive set point will be ignored by the device, and may be changed without affecting device operation.

NOTE 6 Even if when the MRW command issues to the x16 device, writing "0" to OP[7] which is not a sticky bit is required.

NOTE 7 Byte Mode device output each individual MR12 OP[6:0] from DQ[7:0] for lower byte device and from DQ[15:8] for upper byte device by MRR command. OP[7] controls only the MRW operation.

### 6.2.1 Mode Register definition (Cont'd)

**Table 83 — MR12 $V_{REF}$(CA) Settings**

| Function | Operand | $V_{REF}$ Values (% of VDDQ) | | | | | | | | Notes |
|---|---|---|---|---|---|---|---|---|---|---|
| $V_{REF}$ Settings for MR12 | OP [6:0] | $0000000_B$: | 10.0[*5] | $0100000_B$: | 26.0 | $1000000_B$: | 42.0 | $1100000_B$: | 58.0 | 1,2,3,4 |
| | | $0000001_B$: | 10.5[*5] | $0100001_B$: | 26.5 | $1000001_B$: | 42.5 | $1100001_B$: | 58.5 | |
| | | $0000010_B$: | 11.0[*5] | $0100010_B$: | 27.0 | $1000010_B$: | 43.0 | $1100010_B$: | 59.0 | |
| | | $0000011_B$: | 11.5[*5] | $0100011_B$: | 27.5 | $1000011_B$: | 43.5 | $1100011_B$: | 59.5 | |
| | | $0000100_B$: | 12.0[*5] | $0100100_B$: | 28.0 | $1000100_B$: | 44.0 | $1100100_B$: | 60.0 | |
| | | $0000101_B$: | 12.5[*5] | $0100101_B$: | 28.5 | $1000101_B$: | 44.5 | $1100101_B$: | 60.5 | |
| | | $0000110_B$: | 13.0[*5] | $0100110_B$: | 29.0 | $1000110_B$: | 45.0 | $1100110_B$: | 61.0 | |
| | | $0000111_B$: | 13.5[*5] | $0100111_B$: | 29.5 | $1000111_B$: | 45.5 | $1100111_B$: | 61.5 | |
| | | $0001000_B$: | 14.0[*5] | $0101000_B$: | 30.0 | $1001000_B$: | 46.0 | $1101000_B$: | 62.0 | |
| | | $0001001_B$: | 14.5[*5] | $0101001_B$: | 30.5 | $1001001_B$: | 46.5 | $1101001_B$: | 62.5 | |
| | | $0001010_B$: | 15.0 | $0101010_B$: | 31.0 | $1001010_B$: | 47.0 | $1101010_B$: | 63.0 | |
| | | $0001011_B$: | 15.5 | $0101011_B$: | 31.5 | $1001011_B$: | 47.5 | $1101011_B$: | 63.5 | |
| | | $0001100_B$: | 16.0 | $0101100_B$: | 32.0 | $1001100_B$: | 48.0 | $1101100_B$: | 64.0 | |
| | | $0001101_B$: | 16.5 | $0101101_B$: | 32.5 | $1001101_B$: | 48.5 | $1101101_B$: | 64.5 | |
| | | $0001110_B$: | 17.0 | $0101110_B$: | 33.0 | $1001110_B$: | 49.0 | $1101110_B$: | 65.0 | |
| | | $0001111_B$: | 17.5 | $0101111_B$: | 33.5 | $1001111_B$: | 49.5 | $1101111_B$: | 65.5 | |
| | | $0010000_B$: | 18.0 | $0110000_B$: | 34.0 | $1010000_B$: (default) | 50.0 | $1110000_B$: | 66.0 | |
| | | $0010001_B$: | 18.5 | $0110001_B$: | 34.5 | $1010001_B$: | 50.5 | $1110001_B$: | 66.5 | |
| | | $0010010_B$: | 19.0 | $0110010_B$: | 35.0 | $1010010_B$: | 51.0 | $1110010_B$: | 67.0 | |
| | | $0010011_B$: | 19.5 | $0110011_B$: | 35.5 | $1010011_B$: | 51.5 | $1110011_B$: | 67.5 | |
| | | $0010100_B$: | 20.0 | $0110100_B$: | 36.0 | $1010100_B$: | 52.0 | $1110100_B$: | 68.0 | |
| | | $0010101_B$: | 20.5 | $0110101_B$: | 36.5 | $1010101_B$: | 52.5 | $1110101_B$: | 68.5 | |
| | | $0010110_B$: | 21.0 | $0110110_B$: | 37.0 | $1010110_B$: | 53.0 | $1110110_B$: | 69.0 | |
| | | $0010111_B$: | 21.5 | $0110111_B$: | 37.5 | $1010111_B$: | 53.5 | $1110111_B$: | 69.5 | |
| | | $0011000_B$: | 22.0 | $0111000_B$: | 38.0 | $1011000_B$: | 54.0 | $1111000_B$: | 70.0 | |
| | | $0011001_B$: | 22.5 | $0111001_B$: | 38.5 | $1011001_B$: | 54.5 | $1111001_B$: | 70.5 | |
| | | $0011010_B$: | 23.0 | $0111010_B$: | 39.0 | $1011010_B$: | 55.0 | $1111010_B$: | 71.0 | |
| | | $0011011_B$: | 23.5 | $0111011_B$: | 39.5 | $1011011_B$: | 55.5 | $1111011_B$: | 71.5 | |
| | | $0011100_B$: | 24.0 | $0111100_B$: | 40.0 | $1011100_B$: | 56.0 | $1111100_B$: | 72.0 | |
| | | $0011101_B$: | 24.5 | $0111101_B$: | 40.5 | $1011101_B$: | 56.5 | $1111101_B$: | 72.5 | |
| | | $0011110_B$: | 25.0 | $0111110_B$: | 41.0 | $1011110_B$: | 57.0 | $1111110_B$: | 73.0 | |
| | | $0011111_B$: | 25.5 | $0111111_B$: | 41.5 | $1011111_B$: | 57.5 | $1111111_B$: | 73.5 | |

NOTE 1 These values may be used for MR12 OP[6:0] to set the VREF(CA) levels in the LPDDR5-SDRAM.

NOTE 2 The MR12 registers represents either FSP[0], FSP[1] or FSP[2]. Three frequency-set-points each for CA and CK are provided to allow for faster switching between terminated and un-terminated operation, or between different high-frequency setting which may use different terminations values.

NOTE 3 Absolute CA VREF low level (%code * VDDQ) must be higher than or equal to 75mV for normal operation. Vref error is not included this calculation.

NOTE 4 Absolute CA Vref high level (%code * VDDQ) must be lower than or equal to 350mV. Vref error is not included this calculation.

NOTE 5 Vref codes from $0000000_B$ to $0001001_B$ are able to be used only for testing purpose not for normal operation. Vref accuracy are not guaranteed from $0000000_B$ to $0001001_B$.

### 6.2.1 Mode Register definition (Cont'd)

**Table 84 — MR13 Register Information (MA[5:0] = $0D_H$)**

| OP[7] | OP[6] | OP[5] | OP[4] | OP[3] | OP[2] | OP[1] | OP[0] |
|---|---|---|---|---|---|---|---|
| Dual VDD2 | CBT Mode | DMD | DMI I/O Control | RFU | VRO | Thermal Offset | |

**Table 85 — MR13 Definition**

| Function | Register Type | Operand | Data | Notes |
|---|---|---|---|---|
| Thermal Offset | Write-only | OP[1:0] | $00_B$: No offset, 0~5°C gradient (default)<br>$01_B$: 5°C offset, 5~10°C gradient<br>$10_B$: 10°C offset, 10~15°C gradient<br>$11_B$: Reserved | |
| VRO (VREF Output) | | OP[2] | $0_B$: Normal operation (default)<br>$1_B$: Output the VREF(CA) and VREF(DQ) values on DQ bits | 1 |
| DMI I/O Control (DMI input/output behavior control Mode) | | OP[4] | $0_B$: DMI Output behavior follows MR setting Read DBI, Read Link ECC and Read Data Copy (default)<br>$1_B$: DMI outputs a valid data, if Read FIFO Command and Read DQ Calibration Command is issued when Data Mask and/or Write DBI are enabled even though Read DBI, Read Link ECC and Read Data Copy are disabled | 6 |
| DMD (Data Mask Disable) | | OP[5] | $0_B$: Data Mask Operation Enabled (default)<br>$1_B$: Data Mask Operation Disabled | 5 |
| CBT Mode | | OP[6] | $0_B$: CBT Training Mode 1 (default)<br>$1_B$: CBT Training Mode 2 | |
| Dual VDD2 | | OP[7] | $0_B$: Dual VDD2 rail (1.05V & 0.9V) used (default)<br>$1_B$: Single 1.05V VDD2 rail used | 2,3,4 |

NOTE 1 When set, the LPDDR5-SDRAM will output the VREF(CA) and VREF(DQ) voltages on DQ pins. Only the "active" frequency-set-point, as defined by MR16 OP[3:2], will be output on the DQ pins. This function allows an external test system to measure the internal VREF levels and its accuracy is guaranteed at or less than 25°C. The DQ pins used for VREF output are vendor specific.

NOTE 2 LPDDR5 SDRAM may be powered up / initialized/ reset using either a single or dual VDD2 configuration regardless of the OP[7] setting. OP[7] shall be set based on the VDD2 configuration during initialization before normal operation. See Section 4.1 for additional information.

NOTE 3 In the single VDD2 configuration (1.05V), the same voltage shall be supplied to all VDD2L and VDD2H balls.

NOTE 4 When enabled (OP[7]=$1_B$), MR19 OP[1:0] setting is ignored and DRAM operates in High Speed mode.

NOTE 5 When enabled (OP[5]=$0_B$) data masking is enabled for the device. When disabled (OP[5]=$1_B$), masked write command is illegal. See 4.15, LPDDR5 Data Mask (DM) and Data Bus Inversion (DBI) Function.

NOTE 6 DMI I/O Control: MR13 OP[4]=$1_B$ is optional. Refer to vendor's data sheet. And the feature of DMI input/output behavior control Mode is defined at Read DQ Calibration and WCK - DQ (FIFO) training section.

### 6.2.1 Mode Register definition (Cont'd)

**Table 86 — MR14 Register Information (MA[7:0] = $0E_H$)**

| OP[7] | OP[6] | OP[5] | OP[4] | OP[3] | OP[2] | OP[1] | OP[0] |
|---|---|---|---|---|---|---|---|
| VDLC | $V_{REF}$(DQ[7:0]) | | | | | | |

**Table 87 — MR14 definition**

| Function | Register Type | Operand | Data | Notes |
|---|---|---|---|---|
| $V_{REF}$(DQ[7:0]) ($V_{REF}$(DQ[7:0]) Setting) | Read/ Write | OP[6:0] | $0000000_B$:<br>-- Thru --<br>$1111111_B$: See table below | 1,2,3,4,5 |
| VDLC ($V_{REF}$ DQ Lower byte copy) | | OP[7] | X16 device only<br>$0_B$: $V_{REF}$ (DQ[15:8]) follow MR15 OP[6:0] code (default)<br>$1_B$: $V_{REF}$(DQ[15:8]) follow MR14 OP[6:0] code<br>Byte Mode device ignores OP[7] | 6,7 |

NOTE 1 This register controls the $V_{REF}$(DQ[7:0]) levels for Frequency-Set-Point[2:0].

NOTE 2 A read (MRR) to this register places the contents of OP[7:0] on DQ[7:0]. Any RFU bits and unused DQ's shall be set to'0'. See 7.6.1 for more information on MRR Operation.

NOTE 3 A write to OP[6:0] sets the internal $V_{REF}$(DQ[7:0]) level for FSP[0] when MR16 OP[1:0]=$00_B$, sets FSP[1] when MR16 OP[1:0]=$01_B$ or sets FSP[2] when MR16 OP[1:0]=$10_B$. The time required for $V_{REF}$(DQ[7:0]) to reach the set level depends on the step size from the current level to the new level. See 4.1.1 for more information on $V_{REF}$(DQ) training.

NOTE 4 There are three physical registers assigned to each bit of this MR parameter, designated set point 0, set point 1, and set point 2. Only the registers for the set point determined by the state of the FSP-WR bit (MR16 OP[1:0]) will be written to with an MRW command to this MR address, or read from with an MRR command to this address.

NOTE 5 There are three physical registers assigned to each bit of this MR parameter, designated set point 0, set point 1, and set point 2. The device will operate only according to the values stored in the registers for the active set point, i.e., the set point determined by the state of the FSP-OP bit (MR16 OP[3:2]). The values in the registers for the inactive set point will be ignored by the device, and may be changed without affecting device operation.

NOTE 6 When OP[7] is 1B, MR14 MRR will return $V_{REF}$(DQ[15:8]) and MR15 MRR value is undefined. To verify the $V_{REF}$ code, please refer to Table 88 for MR14 OP[6:0].

NOTE 7 Byte mode device doesn't support VDLC function. SOC need to set MR14 and MR15 to individual devices.

### 6.2.1 Mode Register definition (Cont'd)

**Table 88 — MR14 $V_{REF}$(DQ[7:0]) Settings**

| Function | Operand | $V_{REF}$ Values (% of $V_{DDQ}$) | | | | | | | | Notes |
|---|---|---|---|---|---|---|---|---|---|---|
| $V_{REF}$ Settings for MR14 | OP [6:0] | $0000000_B$: | 10.0[*5] | $0100000_B$: | 26.0 | $1000000_B$: | 42.0 | $1100000_B$: | 58.0 | 1,2,3,4 |
| | | $0000001_B$: | 10.5[*5] | $0100001_B$: | 26.5 | $1000001_B$: | 42.5 | $1100001_B$: | 58.5 | |
| | | $0000010_B$: | 11.0[*5] | $0100010_B$: | 27.0 | $1000010_B$: | 43.0 | $1100010_B$: | 59.0 | |
| | | $0000011_B$: | 11.5[*5] | $0100011_B$: | 27.5 | $1000011_B$: | 43.5 | $1100011_B$: | 59.5 | |
| | | $0000100_B$: | 12.0[*5] | $0100100_B$: | 28.0 | $1000100_B$: | 44.0 | $1100100_B$: | 60.0 | |
| | | $0000101_B$: | 12.5[*5] | $0100101_B$: | 28.5 | $1000101_B$: | 44.5 | $1100101_B$: | 60.5 | |
| | | $0000110_B$: | 13.0[*5] | $0100110_B$: | 29.0 | $1000110_B$: | 45.0 | $1100110_B$: | 61.0 | |
| | | $0000111_B$: | 13.5[*5] | $0100111_B$: | 29.5 | $1000111_B$: | 45.5 | $1100111_B$: | 61.5 | |
| | | $0001000_B$: | 14.0[*5] | $0101000_B$: | 30.0 | $1001000_B$: | 46.0 | $1101000_B$: | 62.0 | |
| | | $0001001_B$: | 14.5[*5] | $0101001_B$: | 30.5 | $1001001_B$: | 46.5 | $1101001_B$: | 62.5 | |
| | | $0001010_B$: | 15.0 | $0101010_B$: | 31.0 | $1001010_B$: | 47.0 | $1101010_B$: | 63.0 | |
| | | $0001011_B$: | 15.5 | $0101011_B$: | 31.5 | $1001011_B$: | 47.5 | $1101011_B$: | 63.5 | |
| | | $0001100_B$: | 16.0 | $0101100_B$: | 32.0 | $1001100_B$: | 48.0 | $1101100_B$: | 64.0 | |
| | | $0001101_B$: | 16.5 | $0101101_B$: | 32.5 | $1001101_B$: | 48.5 | $1101101_B$: | 64.5 | |
| | | $0001110_B$: | 17.0 | $0101110_B$: | 33.0 | $1001110_B$: | 49.0 | $1101110_B$: | 65.0 | |
| | | $0001111_B$: | 17.5 | $0101111_B$: | 33.5 | $1001111_B$: | 49.5 | $1101111_B$: | 65.5 | |
| | | $0010000_B$: | 18.0 | $0110000_B$: | 34.0 | $1010000_B$: (default) | 50.0 | $1110000_B$: | 66.0 | |
| | | $0010001_B$: | 18.5 | $0110001_B$: | 34.5 | $1010001_B$: | 50.5 | $1110001_B$: | 66.5 | |
| | | $0010010_B$: | 19.0 | $0110010_B$: | 35.0 | $1010010_B$: | 51.0 | $1110010_B$: | 67.0 | |
| | | $0010011_B$: | 19.5 | $0110011_B$: | 35.5 | $1010011_B$: | 51.5 | $1110011_B$: | 67.5 | |
| | | $0010100_B$: | 20.0 | $0110100_B$: | 36.0 | $1010100_B$: | 52.0 | $1110100_B$: | 68.0 | |
| | | $0010101_B$: | 20.5 | $0110101_B$: | 36.5 | $1010101_B$: | 52.5 | $1110101_B$: | 68.5 | |
| | | $0010110_B$: | 21.0 | $0110110_B$: | 37.0 | $1010110_B$: | 53.0 | $1110110_B$: | 69.0 | |
| | | $0010111_B$: | 21.5 | $0110111_B$: | 37.5 | $1010111_B$: | 53.5 | $1110111_B$: | 69.5 | |
| | | $0011000_B$: | 22.0 | $0111000_B$: | 38.0 | $1011000_B$: | 54.0 | $1111000_B$: | 70.0 | |
| | | $0011001_B$: | 22.5 | $0111001_B$: | 38.5 | $1011001_B$: | 54.5 | $1111001_B$: | 70.5 | |
| | | $0011010_B$: | 23.0 | $0111010_B$: | 39.0 | $1011010_B$: | 55.0 | $1111010_B$: | 71.0 | |
| | | $0011011_B$: | 23.5 | $0111011_B$: | 39.5 | $1011011_B$: | 55.5 | $1111011_B$: | 71.5 | |
| | | $0011100_B$: | 24.0 | $0111100_B$: | 40.0 | $1011100_B$: | 56.0 | $1111100_B$: | 72.0 | |
| | | $0011101_B$: | 24.5 | $0111101_B$: | 40.5 | $1011101_B$: | 56.5 | $1111101_B$: | 72.5 | |
| | | $0011110_B$: | 25.0 | $0111110_B$: | 41.0 | $1011110_B$: | 57.0 | $1111110_B$: | 73.0 | |
| | | $0011111_B$: | 25.5 | $0111111_B$: | 41.5 | $1011111_B$: | 57.5 | $1111111_B$: | 73.5 | |

NOTE 1 These values may be used for MR14 OP[6:0] to set the $V_{REF}$(DQ[7:0]) levels in the LPDDR5-SDRAM.

NOTE 2 The MR14 registers represents either FSP[0], FSP[1] or FSP[2]. Three frequency-set-points each for DQ are provided to allow for faster switching between terminated and un-terminated operation, or between different high-frequency setting which may use different terminations values.

NOTE 3 Absolute DQ[7:0] Vref low level (%code * VDDQ) must be higher than or equal to 75mV for normal operation. Vref error is not include this calculation.

NOTE 4 Absolute DQ[7:0] Vref high level (%code * VDDQ) must be lower than or equal to 350mV when WCK is less than or equal to 1600MHz. Absolute DQ[7:0] Vref high level (%code * VDDQ) must be lower than or equal to 225mV when WCK is higher than 1600MHz. $V_{REF}$ error is not included this calculation.

### 6.2.1 Mode Register definition (Cont'd)

**Table 89 — MR15 Register Information (MA[7:0] = $0F_H$)**

| OP[7] | OP[6] | OP[5] | OP[4] | OP[3] | OP[2] | OP[1] | OP[0] |
|---|---|---|---|---|---|---|---|
| RFU | $V_{REF}$(DQ[15:8]) | | | | | | |

**Table 90 — MR15 definition**

| Function | Register Type | Operand | Data | Notes |
|---|---|---|---|---|
| $V_{REF}$(DQ[15:8]) ($V_{REF}$(DQ[15:8]) Setting) | Read/ Write | OP[6:0] | $0000000_B$:<br>-- Thru --<br>$1111111_B$: See table below | 1,2,3, 4,5,6 |

NOTE 1 This register controls the $V_{REF}$(DQ[15:8]) levels for Frequency-Set-Point[2:0].

NOTE 2 A read (MRR) to this register places the contents of OP[7:0] on DQ[15:8]. Any RFU bits and unused DQ's shall be set to'0'. See 7.6.1 for more information on MRR Operation.

NOTE 3 A write to OP[6:0] sets the internal $V_{REF}$(DQ[15:8]) level for FSP[0] when MR16 OP[1:0]=$00_B$, sets FSP[1] when MR16 OP[1:0]=$01_B$ or sets FSP[2] when MR16 OP[1:0]=$10_B$. The time required for $V_{REF}$(DQ[15:8]) to reach the set level depends on the step size from the current level to the new level. See 4.1.1 for more information on $V_{REF}$(DQ) training.

NOTE 4 There are three physical registers assigned to each bit of this MR parameter, designated set point 0, set point 1, and set point 2. Only the registers for the set point determined by the state of the FSP-WR bit (MR16 OP[1:0]) will be written to with an MRW command to this MR address, or read from with an MRR command to this address.

NOTE 5 There are three physical registers assigned to each bit of this MR parameter, designated set point 0, set point 1 and set point 2. The device will operate only according to the values stored in the registers for the active set point, i.e., the set point determined by the state of the FSP-OP bit (MR16 OP[3:2]). The values in the registers for the inactive set point will be ignored by the device, and may be changed without affecting device operation.

NOTE 6 MR15 MRR value is undefined when MR14 OP[7] is 1B. When MR14 OP[7] is $1_B$, VREF(DQ[15:8] can be read from MR14.

### 6.2.1 Mode Register definition (Cont'd)

**Table 91 — MR15 VREF(DQ[15:8]) Settings**

| Function | Operand | $V_{REF}$ Values (% of $V_{DDQ}$) | | | | | | | | Notes |
|---|---|---|---|---|---|---|---|---|---|---|
| $V_{REF}$ Settings for MR15 | OP [6:0] | $0000000_B$: | 10.0[*5] | $0100000_B$: | 26.0 | $1000000_B$: | 42.0 | $1100000_B$: | 58.0 | 1,2,3,4 |
| | | $0000001_B$: | 10.5[*5] | $0100001_B$: | 26.5 | $1000001_B$: | 42.5 | $1100001_B$: | 58.5 | |
| | | $0000010_B$: | 11.0[*5] | $0100010_B$: | 27.0 | $1000010_B$: | 43.0 | $1100010_B$: | 59.0 | |
| | | $0000011_B$: | 11.5[*5] | $0100011_B$: | 27.5 | $1000011_B$: | 43.5 | $1100011_B$: | 59.5 | |
| | | $0000100_B$: | 12.0[*5] | $0100100_B$: | 28.0 | $1000100_B$: | 44.0 | $1100100_B$: | 60.0 | |
| | | $0000101_B$: | 12.5[*5] | $0100101_B$: | 28.5 | $1000101_B$: | 44.5 | $1100101_B$: | 60.5 | |
| | | $0000110_B$: | 13.0[*5] | $0100110_B$: | 29.0 | $1000110_B$: | 45.0 | $1100110_B$: | 61.0 | |
| | | $0000111_B$: | 13.5[*5] | $0100111_B$: | 29.5 | $1000111_B$: | 45.5 | $1100111_B$: | 61.5 | |
| | | $0001000_B$: | 14.0[*5] | $0101000_B$: | 30.0 | $1001000_B$: | 46.0 | $1101000_B$: | 62.0 | |
| | | $0001001_B$: | 14.5[*5] | $0101001_B$: | 30.5 | $1001001_B$: | 46.5 | $1101001_B$: | 62.5 | |
| | | $0001010_B$: | 15.0 | $0101010_B$: | 31.0 | $1001010_B$: | 47.0 | $1101010_B$: | 63.0 | |
| | | $0001011_B$: | 15.5 | $0101011_B$: | 31.5 | $1001011_B$: | 47.5 | $1101011_B$: | 63.5 | |
| | | $0001100_B$: | 16.0 | $0101100_B$: | 32.0 | $1001100_B$: | 48.0 | $1101100_B$: | 64.0 | |
| | | $0001101_B$: | 16.5 | $0101101_B$: | 32.5 | $1001101_B$: | 48.5 | $1101101_B$: | 64.5 | |
| | | $0001110_B$: | 17.0 | $0101110_B$: | 33.0 | $1001110_B$: | 49.0 | $1101110_B$: | 65.0 | |
| | | $0001111_B$: | 17.5 | $0101111_B$: | 33.5 | $1001111_B$: | 49.5 | $1101111_B$: | 65.5 | |
| | | $0010000_B$: | 18.0 | $0110000_B$: | 34.0 | $1010000_B$: (default) | 50.0 | $1110000_B$: | 66.0 | |
| | | $0010001_B$: | 18.5 | $0110001_B$: | 34.5 | $1010001_B$: | 50.5 | $1110001_B$: | 66.5 | |
| | | $0010010_B$: | 19.0 | $0110010_B$: | 35.0 | $1010010_B$: | 51.0 | $1110010_B$: | 67.0 | |
| | | $0010011_B$: | 19.5 | $0110011_B$: | 35.5 | $1010011_B$: | 51.5 | $1110011_B$: | 67.5 | |
| | | $0010100_B$: | 20.0 | $0110100_B$: | 36.0 | $1010100_B$: | 52.0 | $1110100_B$: | 68.0 | |
| | | $0010101_B$: | 20.5 | $0110101_B$: | 36.5 | $1010101_B$: | 52.5 | $1110101_B$: | 68.5 | |
| | | $0010110_B$: | 21.0 | $0110110_B$: | 37.0 | $1010110_B$: | 53.0 | $1110110_B$: | 69.0 | |
| | | $0010111_B$: | 21.5 | $0110111_B$: | 37.5 | $1010111_B$: | 53.5 | $1110111_B$: | 69.5 | |
| | | $0011000_B$: | 22.0 | $0111000_B$: | 38.0 | $1011000_B$: | 54.0 | $1111000_B$: | 70.0 | |
| | | $0011001_B$: | 22.5 | $0111001_B$: | 38.5 | $1011001_B$: | 54.5 | $1111001_B$: | 70.5 | |
| | | $0011010_B$: | 23.0 | $0111010_B$: | 39.0 | $1011010_B$: | 55.0 | $1111010_B$: | 71.0 | |
| | | $0011011_B$: | 23.5 | $0111011_B$: | 39.5 | $1011011_B$: | 55.5 | $1111011_B$: | 71.5 | |
| | | $0011100_B$: | 24.0 | $0111100_B$: | 40.0 | $1011100_B$: | 56.0 | $1111100_B$: | 72.0 | |
| | | $0011101_B$: | 24.5 | $0111101_B$: | 40.5 | $1011101_B$: | 56.5 | $1111101_B$: | 72.5 | |
| | | $0011110_B$: | 25.0 | $0111110_B$: | 41.0 | $1011110_B$: | 57.0 | $1111110_B$: | 73.0 | |
| | | $0011111_B$: | 25.5 | $0111111_B$: | 41.5 | $1011111_B$: | 57.5 | $1111111_B$: | 73.5 | |

NOTE 1 These values may be used for MR15 OP[6:0] to set the $V_{REF}$(DQ[15:8]) levels in the LPDDR5 SDRAM.
NOTE 2 The MR15 registers represents either FSP[0], FSP[1] or FSP[2]. Three frequency-set-points each for DQ are provided to allow for faster switching between terminated and un-terminated operation, or between different high-frequency setting which may use different terminations values.
NOTE 3 Absolute DQ[15:8] $V_{REF}$ low level (%code * VDDQ) must be higher than or equal to 75mV for normal operation. $V_{REF}$ error is not included in this calculation.
NOTE 4 Absolute DQ[15:8] $V_{REF}$ high level (%code * VDDQ) must be lower than or equal to 350mV when WCK is less than or equal to 1600MHz. Absolute DQ[15:8] $V_{REF}$ high level (%code * VDDQ) must be lower than or equal to 225mV when WCK is higher than 1600MHz. $V_{REF}$ error is not included in this calculation.
NOTE 5 $V_{REF}$ codes from $0000000_B$ to $0001001_B$ are able to be used only for testing purpose not for normal operation. $V_{REF}$ accuracy are not guaranteed from $0000000_B$ to $0001001_B$.

### 6.2.1 Mode Register definition (Cont'd)

**Table 92 — MR16 Register Information (MA[5:0] = $10_H$)**

| OP[7] | OP[6] | OP[5] | OP[4] | OP[3] | OP[2] | OP[1] | OP[0] |
|---|---|---|---|---|---|---|---|
| CBT-Phase | VRCG | CBT | | FSP-OP | | FSP-WR | |

**Table 93 — MR16 definition**

| Function | Register Type | Operand | Data | Notes |
|---|---|---|---|---|
| FSP-WR (Frequency Set Point Write Enable) | Write/ Read | OP[1:0] | $00_B$: Frequency-Set-Point [0] (default)<br>$01_B$: Frequency-Set-Point [1]<br>$10_B$: Frequency-Set-Point [2]<br>$11_B$: Reserved | 1 |
| FSP-OP (Frequency Set Point Operation Mode) | | OP[3:2] | $00_B$: Frequency-Set-Point [0] (default)<br>$01_B$: Frequency-Set-Point [1]<br>$10_B$: Frequency-Set-Point [2]<br>$11_B$: Reserved | 2 |
| CBT (Command Bus Training) | | OP[5:4] | $00_B$: Normal Operation (default)<br>$01_B$: Command Bus Training Mode Enabled FSP0<br>$10_B$: Command Bus Training Mode Enabled FSP1<br>$11_B$: Command Bus Training Mode Enabled FSP2 | 3 |
| VRCG (VREF Current Generator) | | OP[6] | $0_B$: Normal Operation (default)<br>$1_B$: VREF Fast Response (high current) mode | 4 |
| CBT-Phase | | OP[7] | $0_B$: DQ outputs CA pattern latched by CK rising edge (default)<br>$1_B$: DQ outputs CA pattern latched by CK falling edge | |

NOTE 1 FSP-WR determines which frequency-set-point registers are accessed with MRW commands for the following functions such as $V_{REF}$(CA) Setting, $V_{REF}$(DQ) Setting. For more information, refer to 7.6.3, Frequency Set Point.

NOTE 2 FSP-OP determines which frequency-set-point register values are currently used to specify device operation for the following functions such as $V_{REF}$(CA) Setting, $V_{REF}$(DQ) Setting. For more information, refer to 7.6.3, Frequency Set Point.

NOTE 3 A write to set OP[5:4]= $01_B$, $10_B$ or $11_B$ causes the LPDDR5-SDRAM to enter the Command Bus Training mode. When OP[5:4]= $01_B$, $10_B$ or $11_B$, commands are ignored and the contents of CA[6:0] are mapped to the DQ bus. See the Command Bus Training (4.2.2) for more information.

NOTE 4 When OP[6]=$1_B$, the VREF circuit uses a high-current mode to improve VREF settling time.

**Table 94 — MR17 Register Information (MA[5:0] = $11_H$)**

| OP[7] | OP[6] | OP[5] | OP[4] | OP[3] | OP[2] | OP[1] | OP[0] |
|---|---|---|---|---|---|---|---|
| x8ODTD Upper | x8ODTD Lower | ODTD-CA | ODTD-CS | ODTD-CK | SOC ODT | | |

**Table 95 — MR17 definition**

| Function | Register Type | Operand | Data | Notes |
|---|---|---|---|---|
| SoC ODT (Controller ODT Value for VOH calibration) | Write-only | OP[2:0] | $000_B$: Disable (default)<br>$001_B$: RZQ/1<br>$010_B$: RZQ/2<br>$011_B$: RZQ/3<br>$100_B$: RZQ/4<br>$101_B$: RZQ/5<br>$110_B$: RZQ/6<br>$111_B$: RFU | 1,2,3,6 |
| ODTD-CK (CK ODT termination) | | OP[3] | $0_B$: ODTD-CK Enable<br>$1_B$: ODTD-CK Disable(default) | 2,3,4 |
| ODTD-CS (CS ODT termination) | | OP[4] | $0_B$: ODTD-CS Enable RZQ/3<br>$1_B$: ODTD-CS Disable(default) | 2,3,5,7 |
| ODTD-CA (CA ODT termination) | | OP[5] | $0_B$: ODTD-CA Enable<br>$1_B$: ODTD-CA Disable(default) | 2,3,4 |
| X8 ODTD Lower (CA/CS/CK ODT termination disable, Lower Byte select) | | OP[6] | x8 per ch. only, Lower Byte selected Device<br>$0_B$: ODTD-CA/CS/CK follows MR17 OP[5], OP[4], OP[3] & MR11 OP[6:4] (default)<br>$1_B$: ODTD-CA/CS/CK Disabled | 7 |
| X8 ODTD Upper (CA/CS/CK ODT termination disable, Upper Byte select) | | OP[7] | x8 per ch. only, Upper Byte selected Device<br>$0_B$: ODTD-CA/CS/CK follows MR17 OP[5], OP[4], OP[3] & MR11 OP[6:4] (default)<br>$1_B$: ODTD-CA/CS/CK Disabled | 7 |

NOTE 1 All values are “typical".

NOTE 2 There are three physical registers assigned to each bit of this MR parameter, designated set point 0, set point 1 and set point 2. Only the registers for the set point determined by the state of the FSP-WR bit (MR16 OP[1:0]) will be written to with an MRW command to this MR address.

NOTE 3 There are three physical registers assigned to each bit of this MR parameter, designated set point 0, set point 1 and set point 2. The device will operate only according to the values stored in the registers for the active set point, i.e., the set point determined by the state of the FSP-OP bit (MR16 OP[3:2]). The values in the registers for the inactive set point will be ignored by the device, and may be changed without affecting device operation.

NOTE 4 To ensure proper operation in a multi-rank configuration, when CA, CK ODT is enabled via MR11 OP[6:4], MR17 OP[3] and OP[5], the rank providing ODT will continue to terminate the command bus in all DRAM states including Active Self-refresh, Self-refresh Power-down, Active Power-down and Idle Power-down.

NOTE 5 To ensure proper operation in a multi-rank configuration, when CS is enabled via MR17 OP[4], the rank providing ODT will continue to terminate in all DRAM states except Idle Power-down, Active Power-down, Self-refresh Power-down and Deep Sleep Mode. CS ODT state goes OFF ignoring MRS ODT state after Power-Down Entry is issued and returns to MRS ODT state with Power-Down Exit.

NOTE 6 DRAM Pull-up driver strength is controlled by OP[2:O] SOC ODT setting when DQ termination is disabled.

NOTE 7 DRAM will ignore all CS ODT settings, and CS will remain unterminated at all times, when MR21 OP[3] = $0_B$.

### 6.2.1 Mode Register definition (Cont'd)

**Table 96 — MR18 Register Information (MA[7:0] = $12_H$)**

| OP[7] | OP[6] | OP[5] | OP[4] | OP[3] | OP[2] | OP[1] | OP[0] |
|---|---|---|---|---|---|---|---|
| CKR | WCK2CK Leveling | RFU | WCK ON | WCK_FM | WCK ODT | | |

**Table 97 — MR18 Definition**

| Function | Register Type | Operand | Data | Notes |
|---|---|---|---|---|
| WCK ODT | Write-only | OP[2:0] | $000_B$: ODT disable (default)<br>$001_B$: RZQ/1<br>$010_B$: RZQ/2<br>$011_B$: RZQ/3<br>$100_B$: RZQ/4<br>$101_B$: RZQ/5<br>$110_B$: RZQ/6<br>$111_B$: RFU | 1,2,4 |
| WCK FM (WCK Frequency Mode) | | OP[3] | $0_B$: Low frequency mode (default)<br>$1_B$: High frequency mode | 1,2,5 |
| WCK ON (WCK always ON mode) | | OP[4] | $0_B$: WCK Always On Mode disabled (Default)<br>$1_B$: WCK Always On Mode enabled | 1,2 |
| WCK2CK Leveling | | OP[6] | $0_B$: WCK2CK Leveling Mode Disable (default)<br>$1_B$: WCK2CK Leveling Mode Enable | |
| CKR (WCK to CK frequency ratio) | | OP[7] | $0_B$: 4:1 ratio<br>$1_B$: 2:1 ratio (default) | 1,2,3 |

NOTE 1 There are three physical registers assigned to each bit of this MR parameter, designated set point 0, set point 1, and set point 2. Only the registers for the set point determined by the state of the FSP-WR bit (MR16 OP[1:0]) will be written to with an MRW command to this MR address.

NOTE 2 There are three physical registers assigned to each bit of this MR parameter, designated set point 0, set point 1, and set point 2. The SDRAM will operate only according to the values stored in the registers for the active set point, i.e., the set point determined by the state of the FSP-OP bit (MR16 OP[3:2]). The values in the registers for the inactive set point will be ignored by the SDRAM, and may be changed without affecting SDRAM operation.

NOTE 3 CKR 2:1 can support up to 3200Mbps.

NOTE 4 The SDRAM will continue to terminate WCK in all states, if termination is enabled by MR18 OP[2:0].

NOTE 5 tWCK2DQ AC parameters can be changed by MR18 OP[3]. Refer to tWCK2DQ AC parameter table. WCK single-ended mode (MR20 OP[3:2]) can be allowed during Low frequency mode only.

### 6.2.1 Mode Register definition (Cont'd)

**Table 98 - MR19 Register Information (MA[7:0] = $13_H$)**

| OP[7] | OP[6] | OP[5] | OP[4] | OP[3] | OP[2] | OP[1] | OP[0] |
|---|---|---|---|---|---|---|---|
| RFU | | WCK2DQ OSC FM support | WCK2DQ OSC FM | DVFSQ | | DVFSC | |

**Table 99 - MR19 Definition**

| Function | Register Type | Operand | Data | Notes |
|---|---|---|---|---|
| DVFSC (VDD2 Dynamic Voltage and Frequency Scaling Core) | Write-only | OP[1:0] | $00_B$: High Speed mode (only VDD2H: 1.05V rail) (default)<br>$01_B$: Low speed mode (use VDD2L: 0.9V rail)<br>All others: reserved | 1,2 |
| DVFSQ (VDDQ Dynamic Voltage and Frequency Scaling VDDQ) | | OP[3:2] | $00_B$: VDDQ = 0.5V (default)<br>$01_B$: VDDQ = 0.3V<br>All others: reserved | 1,2,3 |
| WCK2DQ OSC FM | | OP[4] | $0_B$: WCK2DQ oscillator for WCK low frequency mode (default)<br>$1_B$: WCK2DQ oscillator for WCK high frequency mode | 1,2,4,5 |
| WCK2DQ OSC FM support | Read-Only | OP[5] | $0_B$: WCK2DQ OSC FM not supported<br>$1_B$: WCK2DQ OSC FM supported | |

NOTE 1 There are three physical registers assigned to each bit of this MR parameter, designated set point 0, set point 1 and set point 2. Only the registers for the set point determined by the state of the FSP-WR bit (MR16 OP[1:0]) will be written to with an MRW command to this MR address, or read from with an MRR command to this address.

NOTE 2 There are three physical registers assigned to each bit of this MR parameter, designated set point 0, set point 1 and set point 2. The device will operate only according to the values stored in the registers for the active set point, i.e., the set point determined by the state of the FSP-OP bit (MR16 OP[3:2]). The values in the registers for the inactive set point will be ignored by the device, and may be changed without affecting device operation.

NOTE 3 When DVFSQ OP[3:2] is $01_B$, DRAM will turn off all ODT DQ, CS, CA, CK and WCK as well as DQ NT-ODT will turn off regardless of MR setting about ODT and NT-ODT.

NOTE 4 In the case of MR19 OP[5]=$0_B$ (LPDDR5 WCK2DQ OSC FM not supported), MR19 OP[4] is "don't care" and WCK2DQ OSC follows MR18 OP[3] WCK Frequency Mode.

NOTE 5 When operating in WCK low frequency mode (MR18 OP[3]=$0_B$), WCK2DQ oscillator for WCK high frequency mode (MR19 OP[4]=$1_B$) can be enabled and vice versa.

### 6.2.1 Mode Register definition (Cont'd)

**Table 100 — MR20 Register Information (MA[7:0] = $14_H$)**

| OP[7] | OP[6] | OP[5] | OP[4] | OP[3] | OP[2] | OP[1] | OP[0] |
|---|---|---|---|---|---|---|---|
| RDC DQ mode | RDC DMI mode | MRWDL | MRWDU | WCK mode | | RDQS | |

**Table 101 — MR20 definition**

| Function | Register Type | Operand | Data | Notes |
|---|---|---|---|---|
| RDQS (Read DQS) | Write-only | OP[1:0] | $00_B$: RDQS_t and RDQS_c disabled<br>$01_B$: RDQS_t enabled and RDQS_c disabled (default)<br>$10_B$: RDQS_t and RDQS_c enabled<br>$11_B$: RDQS_t disabled and RDQS_c enabled | 1,2,3, 6,7,9 |
| WCK mode | | OP[3:2] | $00_B$: differential (default)<br>$01_B$: single-ended from WCK_t<br>$10_B$: single-ended from WCK_c<br>$11_B$: reserved | 1,2,4, 5,8 |
| MRWDL (Mode Register Write Disable Lower byte) | | OP[4] | $0_B$: Lower Byte MRW is enabled (default)<br>$1_B$: Lower Byte MRW is disabled | 10 |
| MRWDU (Mode Register Write Disable Upper byte) | | OP[5] | $0_B$: Upper Byte MRW is enabled (default)<br>$1_B$: Upper Byte MRW is disabled | 10 |
| RDC DMI mode | | OP[6] | In Read DQ Calibration, DMI output pattern is controlled as:<br>$0_B$: DMI pattern will be decided by MR33/34 (default)<br>$1_B$: DMI pattern will be low-fixed | |
| RDC DQ mode | | OP[7] | In Read DQ Calibration, DQ output pattern is controlled by MR33/34 (pattern) and MR31/32 (per-bit control), where, MR31/32 function is defined as:<br>$0_B$: MR31/32 decides whether "invert" or not. (default)<br>$1_B$: MR31/32 decides whether "low-fix" or not. | |

NOTE 1 There are three physical registers assigned to each bit of this MR parameter, designated set point 0, set point 1, and set point 2. Only the registers for the set point determined by the state of the FSP-WR bit (MR16 OP[1:0]) will be written to with an MRW command to this MR address.

NOTE 2 There are three physical registers assigned to each bit of this MR parameter, designated set point 0, set point 1, and set point 2. The device will operate only according to the values stored in the registers for the active set point, i.e., the set point determined by the state of the FSP-OP bit (MR16 OP[3:2]). The values in the registers for the inactive set point will be ignored by the device, and may be changed without affecting device operation.

NOTE 3 WCK clocking generates RDQS_t and RDQS_c.

NOTE 4 When MR20 OP[3:2]= $01_B$, WCK_t is used as WCK timing, and WCK_c should be maintained at a valid logic level.

NOTE 5 When MR20 OP[3:2]= $10_B$, WCK_c is used as WCK timing, and WCK_t should be maintained at a valid logic level

NOTE 6 When MR20 OP[1:0]= $01_B$, RDQS_t is used as RDQS timing, and RDQS_c should be Hi-Z state.

NOTE 7 When MR20 OP[1:0]= $11_B$, RDQS_c is used as RDQS timing, and RDQS_t should be Hi-Z state. NOTE 8 When MR20 OP[3:2]= $01_B$, WCK_t polarity is the same as WCK_t in MR20 OP[3:2]=$00_B$, and when MR20 OP[3:2]= $10_B$, WCK_c polarity is the same as WCK_c in MR20 OP[3:2]=$00_B$.

NOTE 9 When MR20 OP[1:0]= $01_B$, RDQS_t polarity is the same as RDQS_t in MR20 OP[1:0]=$10_B$, and when MR20 OP[1:0]= $11_B$, RDQS_c polarity is the same as RDQS_c in MR20 OP[1:0]=$10_B$.

NOTE 10 This MR setting is not valid to a standard X16 die.

### 6.2.1 Mode Register definition (Cont'd)

**Table 102 — MR21 Register Information (MA[7:0] = $15_H$)**

| OP[7] | OP[6] | OP[5] | OP[4] | OP[3] | OP[2] | OP[1] | OP[0] |
|---|---|---|---|---|---|---|---|
| WXS | WXFE | RDCFE | WDCFE | ODTD-CSFS | WXFS | RDCFS | WDCFS |

**Table 103 — MR21 Definition**

| Function | Register Type | Operand | Data | Notes |
|---|---|---|---|---|
| WDCFS (WRITE Data Copy Function Support) | Read-only | OP[0] | $0_B$: LPDDR5 WRITE data copy function not supported<br>$1_B$: LPDDR5 WRITE data copy function supported | 4 |
| RDCFS (READ Data Copy Function Support) | | OP[1] | $0_B$: LPDDR5 READ data copy function not supported<br>$1_B$: LPDDR5 READ data copy function supported | 4 |
| WXFS (Write X Function Support) | | OP[2] | $0_B$: LPDDR5 Write-X function not supported<br>$1_B$: LPDDR5 Write-X function supported | 4 |
| ODTD-CSFS (ODTD-CS Function Support) | | OP[3] | $0_B$: LPDDR5 ODTD-CS function not supported<br>$1_B$: LPDDR5 ODTD-CS function supported | 4 |
| WDCFE (WRITE Data Copy Function Enable) | Write-only | OP[4] | $0_B$: LPDDR5 WRITE data copy function disable (default)<br>$1_B$: LPDDR5 WRITE data copy function enable | 1 |
| RDCFE (READ Data Copy Function Enable) | | OP[5] | $0_B$: LPDDR5 READ data copy function disable (default)<br>$1_B$: LPDDR5 READ data copy function enable | 2 |
| WXFE (Write X Function Enable) | | OP[6] | $0_B$: LPDDR5 write-X function disable (default)<br>$1_B$: LPDDR5 write-X function enable | 3 |
| WXS (Selection function of data to be written by Write X) | Read-only | OP[7] | $0_B$: Data to be written is "0" only.<br>$1_B$: Data to be written can be selected with "0" and "1 and Byte control" | 4 |

NOTE 1 MR21 OP[4] is "don't care" in case of MR21 OP[0]=$0_B$ (LPDDR5 WRITE data copy function not supported).

NOTE 2 MR21 OP[5] is "don't care" in case of MR21 OP[1]=$0_B$ (LPDDR5 READ data copy function not supported).

NOTE 3 MR21 OP[6] is "don't care" in case of MR21 OP[2]=$0_B$ (LPDDR5 write-X function not supported).

NOTE 4 Data Copy function, Write X and ODTD-CS function are optional. Refer to vendor's data sheet.

### 6.2.1 Mode Register definition (Cont'd)

**Table 104 — MR22 Register Information (MA[7:0] = $16_H$)**

| OP[7] | OP[6] | OP[5] | OP[4] | OP[3] | OP[2] | OP[1] | OP[0] |
|---|---|---|---|---|---|---|---|
| RECC | | WECC | | RFU | | | |

**Table 105 — MR22 Definition**

| Function | Register Type | Operand | Data | Notes |
|---|---|---|---|---|
| WECC<br>(Write link ECC Control) | Write-only | OP[5:4] | $00_B$: Write link ECC disable (default)<br>$01_B$: Write link ECC enable<br>$10_B$: Reserved<br>$11_B$: Reserved | 1,2 |
| RECC<br>(Read link ECC Control) | | OP[7:6] | $00_B$: Read link ECC disable (default)<br>$01_B$: Read link ECC enable<br>$10_B$: Reserved<br>$11_B$: Reserved | 1,2 |
| NOTE 1 There are three physical registers assigned to each bit of this MR parameter, designated set point 0, set point 1, and set point 2. Only the registers for the set point determined by the state of the FSP-WR bit (MR16 OP[1:0]) will be written to with an MRW command to this MR address.<br>NOTE 2 Refer to 7.7.7 for LPDDR5 link ECC descriptions. | | | | |

**Table 106 — MR23 Register Information (MA[5:0] = 17H)**

| OP[7] | OP[6] | OP[5] | OP[4] | OP[3] | OP[2] | OP[1] | OP[0] |
|---|---|---|---|---|---|---|---|
| PASR Segment Mask | | | | | | | |

**Table 107 — MR23 Definition**

| Function | Register Type | Operand | Data | Notes |
|---|---|---|---|---|
| PASR Segment Mask | Write Only | [7:0] | $0_B$: Segment Refresh Enable (default)<br>$1_B$: Segment Refresh Disable | 1,2 |

**Table 108 — Row Address of Masked Segment for x16 Mode**

| Segment | OP[n] | Segment Mask | 2Gb | 3Gb | 4Gb | 6Gb | 8Gb | 12Gb | 16Gb | 24Gb | 32Gb |
|---|---|---|---|---|---|---|---|---|---|---|---|
| | | | R12:R10 | R13:R11 | R13:R11 | R14:R12 | R14:R12 | R15:R13 | R15:R13 | R16:R14 | R16:R14 |
| 0 | 0 | xxxxxxx1 | $000_B$ | | | | | | | | |
| 1 | 1 | xxxxxx1x | $001_B$ | | | | | | | | |
| 2 | 2 | xxxxx1xx | $010_B$ | | | | | | | | |
| 3 | 3 | xxxx1xxx | $011_B$ | | | | | | | | |
| 4 | 4 | xxx1xxxx | $100_B$ | | | | | | | | |
| 5 | 5 | xx1xxxxx | $101_B$ | | | | | | | | |
| 6 | 6 | x1xxxxxx | $110_B$ | Not Allowed | $110_B$ | Not Allowed | $110_B$ | Not Allowed | $110_B$ | Not Allowed | $110_B$ |
| 7 | 7 | 1xxxxxxx | $111_B$ | | $111_B$ | | $111_B$ | | $111_B$ | | $111_B$ |
| NOTE 1 This table indicates the range of row addresses in each masked segment. "X" is don't care for a particular segment.<br>NOTE 2 For 3Gb, 6Gb, 12Gb, and 24Gb densities, OP[7:6] must always be LOW (=$00_B$). | | | | | | | | | | | |

**Table 109 — Row Address of Masked Segment for x8 Mode**

| Segment | OP[n] | Segment Mask | 2Gb | 3Gb | 4Gb | 6Gb | 8Gb | 12Gb | 16Gb | 24Gb | 32Gb |
|---|---|---|---|---|---|---|---|---|---|---|---|
| | | | R13:R11 | R14:R12 | R14:R12 | R15:R13 | R15:R13 | R16:R14 | R16:R14 | R17:R15 | R17:R15 |
| 0 | 0 | xxxxxxx1 | $000_B$ | | | | | | | | |
| 1 | 1 | xxxxxx1x | $001_B$ | | | | | | | | |
| 2 | 2 | xxxxx1xx | $010_B$ | | | | | | | | |
| 3 | 3 | xxxx1xxx | $011_B$ | | | | | | | | |
| 4 | 4 | xxx1xxxx | $100_B$ | | | | | | | | |
| 5 | 5 | xx1xxxxx | $101_B$ | | | | | | | | |
| 6 | 6 | x1xxxxxx | $110_B$ | Not Allowed | $110_B$ | Not Allowed | $110_B$ | Not Allowed | $110_B$ | Not Allowed | $110_B$ |
| 7 | 7 | 1xxxxxxx | $111_B$ | | $111_B$ | | $111_B$ | | $111_B$ | | $111_B$ |
| NOTE 1 This table indicates the range of row addresses in each masked segment. "X" is don't care for a particular segment.<br>NOTE 2 For 3Gb, 6Gb, 12Gb, and 24Gb densities, OP[7:6] must always be LOW (=$00_B$). | | | | | | | | | | | |

### 6.2.1 Mode Register definition (Cont'd)

**Table 110 — MR24 Register Information (MA[5:0] = 18H)**

| OP[7] | OP[6] | OP[5] | OP[4] | OP[3] | OP[2] | OP[1] | OP[0] |
|---|---|---|---|---|---|---|---|
| DFES | DFE Quantity for Upper Byte (DFEQU) | | | RFU | DFE Quantity for Lower Byte (DFEQL) | | |

**Table 111 — MR24 Definition**

| Function | Register Type | Operand | Data | Notes |
|---|---|---|---|---|
| DFE Quantity for Lower Byte (DFEQL) | Write Only | OP[2:0] | $000_B$: DFE disabled (default)<br>$001_B$: Minimum negative feedback quantity<br>⋮<br>$011_B$: Maximum negative feedback quantity<br>All Others: Reserved | 1,2,3 |
| DFE Quantity for Upper Byte (DFEQU) | | OP[6:4] | $000_B$: DFE disabled (default)<br>$001_B$: Minimum negative feedback quantity<br>⋮<br>$011_B$: Maximum negative feedback quantity<br>All Others: Reserved | 1,2,3 |
| DFE support (DFES) | Read Only | OP[7] | $0_B$: DFE is not supported<br>$1_B$: DFE is supported | |

NOTE 1 DFE quantity is vender specific. Please refer to each vender specification.

NOTE 2 There are three physical registers assigned to each bit of this MR parameter, designated set point 0, set point 1, and set point 2. Only the registers for the set point determined by the state of the FSP-WR bit (MR16 OP[1:0]) will be written to with an MRW command to this MR address, or read from with an MRR command to this address.

NOTE 3 There are three physical registers assigned to each bit of this MR parameter, designated set point 0, set point 1, and set point 2. The device will operate only according to the values stored in the registers for the active set point, i.e., the set point determined by the state of the FSP-OP bit (MR16 OP[3:2]). The values in the registers for the inactive set point will be ignored by the device, and may be changed without affecting device operation.

### 6.2.1 Mode Register definition (Cont'd)

**Table 112 — MR25 Register Information (MA[7:0] = $19_H$)**

| OP[7] | OP[6] | OP[5] | OP[4] | OP[3] | OP[2] | OP[1] | OP[0] |
|---|---|---|---|---|---|---|---|
| Optimized Refresh mode | PARC | CA Inputs TERM | CK Pair TERM | RFU | | | |

**Table 113 — MR25 Definition**

| Function | Register Type | Operand | Data | Notes |
|---|---|---|---|---|
| CK Pair TERM (Other Shared dies' CK ODT Info) | Write-only | OP[4] | $0_B$: All ranks sharing CK Pair are un-terminated (default)<br>$1_B$: One of ranks sharing CK Pair are terminated | 1,2 |
| CA Inputs TERM (Other Shared dies' CA ODT Info) | | OP[5] | $0_B$: All ranks sharing CA Inputs are un-terminated (default)<br>$1_B$: One of ranks sharing CA Inputs are terminated | 1,2 |
| PARC (Partial Array Refresh Control) | | OP[6] | $0_B$: PAAR disable (default)<br>$1_B$: PAAR enable | 3,4 |
| Optimized Refresh mode | | OP[7] | $0_B$: Optimized Refresh mode disabled<br>$1_B$: Optimized Refresh mode enabled (default) | |

NOTE 1 MR25 OP[5]/[4] is set to notify CA/CK ODT status of other shared dies.

NOTE 2 When CK and CA ODT status is different from each other (ex. CK termination, CA un-termination) and MR25 OP[5] is disabled, the un-terminated CA input buffer uses the fixed level reference voltage (TBD).

NOTE 3 MR23 PASR Segment Mask is applied to PAAR (Partial Array Auto Refresh) operation if PAAR enabled.

NOTE 4 Refer to 7.5.5 for LPDDR5 PASR descriptions.

**Table 114 — MR26 Register Information (MA[7:0] = $1A_H$)**

| OP[7] | OP[6] | OP[5] | OP[4] | OP[3] | OP[2] | OP[1] | OP[0] |
|---|---|---|---|---|---|---|---|
| RDQSTFE | RDQSTFS | DCMU1 | DCMU0 | DCML1 | DCML0 | DCM Flip | DCM Start/Stop |

**Table 115 — MR26 definition**

| Function | Register Type | Operand | Data | Notes |
|---|---|---|---|---|
| RD/WR-based WCK-RDQS_t Training mode Enable (RDQSTFE) | Write-only | OP[7] | $0_B$: SDRAM does not support RD/WR-based WCK-RDQS_t Training Disable (Default)<br>$1_B$: SDRAM supports RD/WR-based WCK-RDQS_t Training Enable | |
| RD/WR-baed WCK-RDQS_t Training mode support (RDQSTFS) | Read-only | OP[6] | $0_B$: SDRAM does not support RD/WR-based WCK-RDQS_t Training mode<br>$1_B$: SDRAM supports RD/WR-based WCK-RDQS_t Training mode | |
| Duty cycle result for upper byte when DCM Flip=1 (DCMU1) | Read-only | OP[5] | $0_B$: High duty cycle < 50% for upper byte<br>$1_B$: High duty cycle ≥ 50% for upper byte | |
| Duty cycle result for upper byte when DCM Flip=0 (DCMU0) | | OP[4] | $0_B$: High duty cycle < 50% for upper byte<br>$1_B$: High duty cycle ≥50% for upper byte | |
| Duty cycle result for lower byte when DCM Flip=1 (DCML1) | | OP[3] | $0_B$: High duty cycle < 50% for lower byte<br>$1_B$: High duty cycle ≥ 50% for lower byte | |
| Duty cycle result for lower byte when DCM Flip=0 (DCML0) | | OP[2] | $0_B$: High duty cycle < 50% for lower byte<br>$1_B$: High duty cycle ≥ 50% for lower byte | |
| Flip inputs to cancel offset(DCM_Flip) | Write-only | OP[1] | $0_B$: No flip (default)<br>$1_B$: Flip | |
| DCM_Start/Stop | | OP[0] | $0_B$: Stop (default)<br>$1_B$: Start | |

### 6.2.1 Mode Register definition (Cont'd)

**Table 116 — MR27 Register Information (MA[7:0] = $1B_H$)**

| OP[7] | OP[6] | OP[5] | OP[4] | OP[3] | OP[2] | OP[1] | OP[0] |
|---|---|---|---|---|---|---|---|
| RAAMULT | | RAAIMT | | | | | RFM |

**Table 117 — MR27 Definition**

| Function | Register Type | Operand | Data | Notes |
|---|---|---|---|---|
| RFM ( RFM Required ) | Read-only | OP[0] | $0_B$: RFM not required<br>$1_B$: RFM required | 1 |
| RAAIMT ( Rolling Accumulated ACT Initial Management Threshold ) | | OP[5:1] | $00000_B$: Invalid<br>$00001_B$: 8<br>$00010_B$: 16<br>…….(step +8)<br>$11110_B$: 240<br>$11111_B$: 248 | 1 |
| RAAMULT<br>(Rolling Accumulated ACT Multiplier) | | OP[7:6] | $00_B$: 2X<br>$01_B$: 4X<br>$10_B$: 6X<br>$11_B$: 8X | 1, 2 |

NOTE 1 Vendor programmed, no need to periodical read..
NOTE 2 RAAMMT = RAAMULT * RAAIMT

### 6.2.1 Mode Register definition (Cont'd)

**Table 118 — MR28 Register Information (MA[7:0] = $1C_H$)**

| OP[7] | OP[6] | OP[5] | OP[4] | OP[3] | OP[2] | OP[1] | OP[0] |
|---|---|---|---|---|---|---|---|
| RFU | | ZQ Mode | RFU | ZQ Interval | | ZQ Stop | ZQ Reset |

**Table 119 — MR28 Definition**

| Function | Register Type | Operand | Data | Notes |
|---|---|---|---|---|
| ZQ Reset | Write-only | OP[0] | $0_B$: Normal Operation (Default)<br>$1_B$: ZQ Reset | 1,2 |
| ZQ Stop | | OP[1] | $0_B$: Normal Operation (Default)<br>$1_B$: Background ZQ Calibration is halted after tZQSTOP | 3,4 |
| ZQ Interval | | OP[3:2] | $00_B$: Background Cal Interval ≤32ms<br>$01_B$: Background Cal Interval ≤64ms (default)<br>$10_B$: Background Cal Interval ≤128ms<br>$11_B$: Background Cal Interval ≤256ms | 5 |
| ZQ Mode | | OP[5] | $0_B$: Background ZQ Calibration (Default)<br>$1_B$: Command-Based ZQ Calibration | 5 |

NOTE 1 See Table 22, ZQCal Timing Parameters for calibration latency and timing.
NOTE 2 Asserting ZQ Reset will set the calibration values to their default setting.
NOTE 3 When ZQ Stop is enabled, the ZQ resource is available for use by other devices. See 4.2.1.2, ZQ Stop Functionality.
NOTE 4 In Command-Based Calibration mode ZQCal Start commands are ignored when MR28 OP[1]=$1_B$.
NOTE 5 ZQ Interval and ZQ Mode MR settings are only applicable to ZQ Master die. These settings will be ignored by ZQ Slave die

### 6.2.1 Mode Register definition (Cont'd)

**Table 120 — MR29 Register Information (MA[7:0] = 1DH)**

| OP[7] | OP[6] | OP[5] | OP[4] | OP[3] | OP[2] | OP[1] | OP[0] |
|---|---|---|---|---|---|---|---|
| PPR Resource Bank 7 | PPR Resource Bank 6 | PPR Resource Bank 5 | PPR Resource Bank 4 | PPR Resource Bank 3 | PPR Resource Bank 2 | PPR Resource Bank 1 | PPR Resource Bank 0 |

**Table 121 — MR29 Definition**

| Function | Register Type | Operand | Data | Notes |
|---|---|---|---|---|
| PPR Resource Bank 7 | Read-only | OP[7] | 0B: PPR Resource is not available<br>1B: PPR Resource is available | 1 |
| PPR Resource Bank 6 | | OP[6] | 0B: PPR Resource is not available<br>1B: PPR Resource is available | 1 |
| PPR Resource Bank 5 | | OP[5] | 0B: PPR Resource is not available<br>1B: PPR Resource is available | 1 |
| PPR Resource Bank 4 | | OP[4] | 0B: PPR Resource is not available<br>1B: PPR Resource is available | 1 |
| PPR Resource Bank 3 | | OP[3] | 0B: PPR Resource is not available<br>1B: PPR Resource is available | 1 |
| PPR Resource Bank 2 | | OP[2] | 0B: PPR Resource is not available<br>1B: PPR Resource is available | 1 |
| PPR Resource Bank 1 | | OP[1] | 0B: PPR Resource is not available<br>1B: PPR Resource is available | 1 |
| PPR Resource Bank 0 | | OP[0] | 0B: PPR Resource is not available<br>1B: PPR Resource is available | 1 |

NOTE 1 PPR Resources describe as follows:

| PPR Resource | OP0 [Group 0] | | | | OP1 [Group 1] | | | | OP2 [Group 2] | | | | OP3 [Group 3] | | | |
|---|---|---|---|---|---|---|---|---|---|---|---|---|---|---|---|---|
| 4BK/4BG | 0 | 1 | 2 | 3 | 0 | 1 | 2 | 3 | 0 | 1 | 2 | 3 | 0 | 1 | 2 | 3 |
| 16bank | 0 | 1 | 2 | 3 | 4 | 5 | 6 | 7 | 8 | 9 | 10 | 11 | 12 | 13 | 14 | 15 |
| 8bank | 0 | 1 | 2 | 3 | 4 | 5 | 6 | 7 | 0 | 1 | 2 | 3 | 4 | 5 | 6 | 7 |

### 6.2.1 Mode Register definition (Cont'd)

**Table 122 — MR30 Register Information (MA[5:0] = $1E_H$)**

| OP[7] | OP[6] | OP[5] | OP[4] | OP[3] | OP[2] | OP[1] | OP[0] |
|---|---|---|---|---|---|---|---|
| DCA for Upper Byte (DCAU) | | | | DCA for Lower Byte (DCAL) | | | |

**Table 123 — MR30 Definition**

| Function | Register Type | Operand | Data | Notes |
|---|---|---|---|---|
| DCA for Lower Byte (DCAL) | Write-only | OP[3:0] | $0000_B$: 0 Steps (default no adjustment)<br>$0001_B$: -1 Steps<br>$0010_B$: -2 Steps<br>$0011_B$: -3 Steps<br>$0100_B$: -4 Steps<br>$0101_B$: -5 Steps<br>$0110_B$: -6 Steps<br>$0111_B$: -7 Step<br>$1000_B$: RFU<br>$1001_B$: +1 Step<br>$1010_B$: +2 Steps<br>$1011_B$: +3 Steps<br>$1100_B$: +4 Steps<br>$1101_B$: +5 Steps<br>$1110_B$: +6 Steps<br>$1111_B$: +7 Steps | 1,2,3,4,5 |
| DCA for Upper Byte (DCAU) | | OP[7:4] | $0000_B$: 0 Steps (default no adjustment)<br>$0001_B$: -1 Steps<br>$0010_B$: -2 Steps<br>$0011_B$: -3 Steps<br>$0100_B$: -4 Steps<br>$0101_B$: -5 Steps<br>$0110_B$: -6 Steps<br>$0111_B$: -7 Step<br>$1000_B$: RFU<br>$1001_B$: +1 Step<br>$1010_B$: +2 Steps<br>$1011_B$: +3 Steps<br>$1100_B$: +4 Steps<br>$1101_B$: +5 Steps<br>$1110_B$: +6 Steps<br>$1111_B$: +7 Steps | 1,2,3,4,5 |

NOTE 1 $0001_B$ to $0111_B$ of bit sets will decrease the internal WCK duty cycle.

NOTE 2 $1001_B$ to $1111_B$ of bit sets will increase the internal WCK duty cycle.

NOTE 3 There are three physical registers assigned to each bit of this MR parameter, designated set point 0, set point 1, and set point 2. Only the registers for the set point determined by the state of the FSP-WR bit (MR16 OP[1:0]) will be written to with an MRW command to this MR address.

NOTE 4 There are three physical registers assigned to each bit of this MR parameter, designated set point 0, set point 1, and set point 2. The SDRAM will operate only according to the values stored in the registers for the active set point, i.e., the set point determined by the state of the FSP-OP bit (MR16 OP[3:2]). The values in the registers for the inactive set point will be ignored by the SDRAM, and may be changed without affecting SDRAM operation.

NOTE 5. With byte mode device, OP[3:0] applies lower byte device and OP[7:4] applies upper byte device. Unused operands (OP[7:4] for lower byte device and OP[3:0] for upper byte device) should be set $0_B$ or $1_B$ by which are ignored SDRAM though.

### 6.2.1 Mode Register definition (Cont'd)

**Table 124 — MR31 Register Information (MA[7:0] = $1F_H$)**

| OP[7] | OP[6] | OP[5] | OP[4] | OP[3] | OP[2] | OP[1] | OP[0] |
|---|---|---|---|---|---|---|---|
| Lower-byte per-bit control Register for DQ Calibration | | | | | | | |

**Table 125 — MR31 Definition**

| Function | Register Type | Operand | Data | Notes |
|---|---|---|---|---|
| Lower-byte per-bit control for DQ Calibration | Write-only | OP[7:0] | The following values may be written for any operand OP[7:0], and will be applied to the corresponding DQ locations DQ[7:0] within a byte lane:<br><br>In DQ inversion mode (MR20[7] = 0),<br>$0_B$: Do not invert<br>$1_B$: Invert the DQ Calibration patterns in MR33 and MR34<br>In DQ output fix0 mode (MR20[7] = 1),<br>$0_B$: Do not apply low-fix<br>$1_B$: Data pattern is low-fixed<br><br>Default value for OP[7:0]=$55_H$ | 1,2,3,4 |

NOTE 1 This register will invert or apply low-fix for the DQ Calibration pattern found in MR33 and MR34 for any single DQ, or any combination of DQ's.
Example: In case of DQ inversion mode, If MR31 OP[7:0]=$00010101_B$, then the DQ Calibration patterns transmitted on DQ[7,6,5,3,1] will not be inverted, but the DQ Calibration patterns transmitted on DQ[4,2,0] will be inverted.
In case of DQ output fix0 mode, If MR31 OP[7:0]=$00010101_B$, then the DQ Calibration patterns transmitted on DQ[7,6,5,3,1] will not be low-fixed, but the DQ Calibration patterns transmitted on DQ[4,2,0] will be low-fixed.

NOTE 2 DMI[0] is not inverted. DMI pattern is decided by MR33/34, where MR20[6] defines whether DMI output low-fix or not.

NOTE 3 No Data Bus Inversion (DBI) function is enacted during DQ Read Calibration, even if DBI is enabled in MR3-OP[7:6].

NOTE 4 In case of byte mode, MR31 is valid only for lower byte selected device.

**Table 126 — MR31 Invert Register Pin Mapping**

| PIN | DQ0 | DQ1 | DQ2 | DQ3 | DMI0 | DQ4 | DQ5 | DQ6 | DQ7 |
|---|---|---|---|---|---|---|---|---|---|
| MR31 | OP0 | OP1 | OP2 | OP3 | NO-Invert | OP4 | OP5 | OP6 | OP7 |

### 6.2.1 Mode Register definition (Cont'd)

**Table 127 — MR32 Register Information (MA[7:0] = $20_H$)**

| OP[7] | OP[6] | OP[5] | OP[4] | OP[3] | OP[2] | OP[1] | OP[0] |
|---|---|---|---|---|---|---|---|
| Upper-byte per-bit control Register for DQ Calibration | | | | | | | |

**Table 128 — MR32 definition**

| Function | Register Type | Operand | Data | Notes |
|---|---|---|---|---|
| Upper-byte per-bit control for DQ Calibration | Write-only | OP[7:0] | The following values may be written for any operand OP[7:0], and will be applied to the corresponding DQ locations DQ[15:8] within a byte lane:<br><br>In DQ inversion mode (MR20[7] = 0),<br>$0_B$: Do not invert<br>$1_B$: Invert the DQ Calibration patterns in MR33 and MR34<br>In DQ output fix0 mode (MR20[7] = 1),<br>$0_B$: Do not apply low-fix<br>$1_B$: Data pattern is low-fixed<br><br>Default value for OP[7:0] = $55_H$ | 1,2,3,4 |

NOTE 1 This register will invert or apply low-fix for the DQ Calibration pattern found in MR33 and MR34 for any single DQ, or any combination of DQ's.
Example: In case of DQ inversion mode, If MR32OP[7:0]=$00010101_B$, then the DQ Calibration patterns transmitted on DQ[15,14,13,11,9] will not be inverted, but the DQ Calibration patterns transmitted on DQ[12,10,8] will be inverted.
In case of DQ output fix0 mode, If MR31 OP[7:0]=$00010101_B$, then the DQ Calibration patterns transmitted on DQ[15,14,13,11,9] will not be low-fixed, but the DQ Calibration patterns transmitted on DQ[12,10,8] will be low-fixed.

NOTE 2 DMI[1] is not inverted. DMI pattern is decided by MR33/34, where MR20[6] defines whether DMI output low-fix or not.

NOTE 3 No Data Bus Inversion (DBI) function is enacted during DQ Read Calibration, even if DBI is enabled in MR3-OP[7:6].

NOTE 4 In case of byte mode, MR32 is valid only for upper byte selected device.

**Table 129 — MR32 Invert Register Pin Mapping**

| PIN | DQ8 | DQ9 | DQ10 | DQ11 | DMI1 | DQ12 | DQ13 | DQ14 | DQ15 |
|---|---|---|---|---|---|---|---|---|---|
| MR32 | OP0 | OP1 | OP2 | OP3 | NO-Invert | OP4 | OP5 | OP6 | OP7 |

### 6.2.1 Mode Register definition (Cont'd)

**Table 130 — MR33 Register Information (MA[7:0] = $21_H$)**

| OP[7] | OP[6] | OP[5] | OP[4] | OP[3] | OP[2] | OP[1] | OP[0] |
|---|---|---|---|---|---|---|---|
| DQ Calibration Pattern "A" | | | | | | | |

**Table 131 — MR33 Definition**

| Function | Register Type | Operand | Data | Notes |
|---|---|---|---|---|
| Return DQ Calibration Pattern MR33 + MR34 | Write-only | OP[7:0] | $X_B$: DQ Calibration Pattern A "$5A_H$" (default) | 1,2,3,4 |

NOTE 1 Read DQ Calibration command (RDC) causes the device to return the DQ Calibration Pattern contained in this register followed by the contents of MR34.The pattern contained in MR33 is transmitted on DQ[15:0] and DMI[1:0] when DQ Read Calibration is issued. The pattern is transmitted serially on each data lane, is organized as "big endian" such that the low-order bit in a byte is transmitted first. If the data pattern in MR33 is $27_H$ , then the first bit transmitted with be a '1', followed by '1', '1', '0', '0', '1', '0', and '0'. The bit stream will be $11100100_B$.
A default pattern "$5A_H$"is loaded at power-up or RESET, or the pattern may be overwritten with an MRW to this register. The contents of MR31 and MR32 will invert the data pattern for a given DQ See Table 125, for more information.

NOTE 2 MR31 and MR32 may be used to invert the MR33/MR34 data patterns on the DQ pins. See Table 125 and Table 128 for more information. Data is never inverted on the DMI[1:0] pins.

NOTE 3 The data pattern is not transmitted on the DMI[1:0] pins if DBI-RD is disabled via MR3-OP[6:5].

NOTE 4 No Data Bus Inversion (DBI) function is enacted during DQ Read Calibration, even if DBI is enabled in MR3-OP[6:5].

**Table 132 — MR34 Register Information (MA[7:0] = $22_H$)**

| OP[7] | OP[6] | OP[5] | OP[4] | OP[3] | OP[2] | OP[1] | OP[0] |
|---|---|---|---|---|---|---|---|
| DQ Calibration Pattern "B" | | | | | | | |

**Table 133 — MR34 Definition**

| Function | Register Type | Operand | Data | Notes |
|---|---|---|---|---|
| Return DQ Calibration Pattern MR33 + MR34 | Write-only | OP[7:0] | $X_B$: DQ Calibration Pattern B "$3C_H$" (Default) | 1,2,3,4 |

NOTE 1 Read DQ Calibration command (RDC) causes the device to return the DQ Calibration Pattern contained in MR33 and followed by the contents of this register. The pattern contained in MR34 is concatenated to the end of MR33 and transmitted on DQ[15:0] and DMI[1:0] when DQ Read Calibration is issued. The pattern is transmitted serially on each data lane, organized "big endian" such that the low-order bit in a byte is transmitted first. If the data pattern in MR33 is $27_H$, then the first bit transmitted with be a '1', followed by '1', '1', '0', '0', '1', '0', and '0'. The bit stream will be $111100100_B$.
A default pattern "$3C_H$" is loaded at power-up or RESET, or the pattern may be overwritten with an MRW to this register. See MR33 for more information.

NOTE 2 MR31 and MR32 may be used to invert the MR33/MR34 data patterns on the DQ pins. See MR31 and MR32 for more information. Data is never inverted on the DMI[1:0] pins.

NOTE 3 The data pattern is not transmitted on the DMI[1:0] pins if DBI-RD is disabled via MR3-OP[6:5].

NOTE 4 No Data Bus Inversion (DBI) function is enacted during DQ Read Calibration, even if DBI is enabled in MR3-OP[6].

### 6.2.1 Mode Register definition (Cont'd)

**Table 134 — MR35 Register Information (MA[7:0] = $23_H$)**

| OP[7] | OP[6] | OP[5] | OP[4] | OP[3] | OP[2] | OP[1] | OP[0] |
|---|---|---|---|---|---|---|---|
| WCK2DQI Oscillator Count - LSB | | | | | | | |

**Table 135 — MR35 Definition**

| Function | Register Type | Operand | Data | Notes |
|---|---|---|---|---|
| WCK2DQI Oscillator (DQ input Training WCK Oscillator) | Read-only | OP[7:0] | 0 - 255 LSB DRAM WCK2DQI Oscillator Count | 1,2,3,4 |

NOTE 1 MR35 reports the LSB bits of the DRAM WCK2DQI Oscillator count. The DRAM WCK2DQI Oscillator count value is used to train WCK to the DQ data valid window. The value reported by the DRAM in this mode register can be used by the memory controller to periodically adjust the phase of WCK relative to DQ.

NOTE 2 Both MR35 and MR36 must be read (MRR) and combined to get the value of the WCK2DQI Oscillator count.

NOTE 3 A new MPC [Start WCK2DQI Oscillator] could be issued to reset the contents of MR35/MR36.

NOTE 4 WCKDQI & WCKDQO cannot be operated simultaneously.

**Table 136 — MR36 Register Information (MA[7:0] = $24_H$)**

| OP[7] | OP[6] | OP[5] | OP[4] | OP[3] | OP[2] | OP[1] | OP[0] |
|---|---|---|---|---|---|---|---|
| WCK2DQI Oscillator Count - MSB | | | | | | | |

**Table 137 — MR36 Definition**

| Function | Register Type | Operand | Data | Notes |
|---|---|---|---|---|
| WCK2DQI Oscillator (DQ input Training WCK Oscillator) | Read-only | OP[7:0] | 0 - 255 MSB DRAM WCK2DQI Oscillator Count | 1,2,3,4 |

NOTE 1 MR36 reports the MSB bits of the DRAM WCK2DQI Oscillator count. The DRAM WCK2DQI Oscillator count value is used to train WCK to the DQ data valid window. The value reported by the DRAM in this mode register can be used by the memory controller to periodically adjust the phase of WCK relative to DQ.

NOTE 2 Both MR35 and MR36 must be read (MRR) and combined to get the value of the WCK2DQI Oscillator count.

NOTE 3 A new MPC [Start WCK2DQI Oscillator] could be issued to reset the contents of MR35/MR36.

NOTE 4 WCKDQI & WCKDQO cannot be operated simultaneously.

### 6.2.1 Mode Register definition (Cont'd)

**Table 138 — MR37 Register Information (MA[7:0] = $25_H$)**

| OP[7] | OP[6] | OP[5] | OP[4] | OP[3] | OP[2] | OP[1] | OP[0] |
|---|---|---|---|---|---|---|---|
| WCK2DQI interval timer run time setting | | | | | | | |

**Table 139 — MR37 Definition**

| Function | Register Type | Operand | Data | Notes |
|---|---|---|---|---|
| WCK2DQI interval timer run time | Write/Read | OP[7:0] | $00000000_B$: WCK2DQI interval timer stop via MPC Command (Default)<br>$00000001_B$: WCK2DQI timer stops automatically at 16th clocks after timer start<br>$00000010_B$: WCK2DQI timer stops automatically at 32nd clocks after timer start<br>$00000011_B$: WCK2DQI timer stops automatically at 48th clocks after timer start<br>$00000100_B$: WCK2DQI timer stops automatically at 64th clocks after timer start<br>---------- Thru ----------<br>$00111111_B$: WCK2DQI timer stops automatically at (63X16)th clocks after timer start<br>$01XXXXXX_B$: WCK2DQI timer stops automatically at 2048th clocks after timer start<br>$10XXXXXX_B$: WCK2DQI timer stops automatically at 4096th clocks after timer start<br>$11XXXXXX_B$: WCK2DQI timer stops automatically at 8192nd clocks after timer start | 1,2 |

NOTE 1 MPC command with OP[7:0]=$10000010_B$ (Stop WCK2DQI Interval Oscillator) stops WCK2DQI interval timer in case of MR37 OP[7:0] = $00000000_B$.

NOTE 2 MPC command with OP[7:0]=$10000010_B$ (Stop WCK2DQI Interval Oscillator) is illegal with non-zero values in MR37 OP[7:0].

### 6.2.1 Mode Register definition (Cont'd)

**Table 140 — MR38 Register Information (MA[7:0] = $26_H$)**

| OP[7] | OP[6] | OP[5] | OP[4] | OP[3] | OP[2] | OP[1] | OP[0] |
|---|---|---|---|---|---|---|---|
| WCK2DQO Oscillator Count - LSB | | | | | | | |

**Table 141 — MR38 Definition**

| Function | Register Type | Operand | Data | Notes |
|---|---|---|---|---|
| WCK2DQO Oscillator (DQ output Training WCK Oscillator) | Read-only | OP[7:0] | 0 - 255 LSB DRAM WCK2DQO Oscillator Count | 1,2,3 |

NOTE 1 MR38 reports the LSB bits of the DRAM WCK2DQO Oscillator count. The DRAM WCK2DQO Oscillator count value is used to train WCK to the DQ data valid window. The value reported by the DRAM in this mode register can be used by the memory controller to periodically adjust the phase of DQ output relative to WCK.

NOTE 2 Both MR38 and MR39 must be read (MRR) and combined to get the value of the WCK2DQO Oscillator count.

NOTE 3 A new MPC [Start WCK2DQO Oscillator] can be issued at any time before sending MPC [Stop WCK2DQO Oscillator]. A new MPC [Start WCK2DQO Oscillator] resets the contents of MR38/MR39.

**Table 142 — MR39 Register Information (MA[7:0] = $27_H$)**

| OP[7] | OP[6] | OP[5] | OP[4] | OP[3] | OP[2] | OP[1] | OP[0] |
|---|---|---|---|---|---|---|---|
| WCK2DQO Oscillator Count - MSB | | | | | | | |

**Table 143 — MR39 Definition**

| Function | Register Type | Operand | Data | Notes |
|---|---|---|---|---|
| WCK2DQO Oscillator (DQ output Training WCK Oscillator) | Read-only | OP[7:0] | 0 - 255 MSB DRAM WCK2DQO Oscillator Count | 1,2,3 |

NOTE 1 MR39 reports the MSB bits of the DRAM WCK2DQO Oscillator count. The DRAM WCK2DQO Oscillator count value is used to train WCK to the DQ data valid window. The value reported by the DRAM in this mode register can be used by the memory controller to periodically adjust the phase of DQ output relative to WCK.

NOTE 2 Both MR38 and MR39 must be read (MRR) and combined to get the value of the WCK2DQO Oscillator count.

NOTE 3 A new MPC [Start WCK2DQO Oscillator] can be issued at any time before sending MPC [Stop WCK2DQO Oscillator]. A new MPC [Start WCK2DQO Oscillator] resets the contents of MR38/MR39.

### 6.2.1 Mode Register definition (Cont'd)

**Table 144 — MR40 Register Information (MA[7:0] = $28_H$)**

| OP[7] | OP[6] | OP[5] | OP[4] | OP[3] | OP[2] | OP[1] | OP[0] |
|---|---|---|---|---|---|---|---|
| WCK2DQO interval timer run time setting | | | | | | | |

**Table 145 — MR40 Definition**

| Function | Register Type | Operand | Data | Notes |
|---|---|---|---|---|
| WCK2DQO interval timer run time | Write/Read | OP[7:0] | $00000000_B$: WCK2DQO interval timer stop via MPC Command (Default)<br>$00000001_B$: WCK2DQO timer stops automatically at 16th clocks after timer start<br>$00000010_B$: WCK2DQO timer stops automatically at 32nd clocks after timer start<br>$00000011_B$: WCK2DQO timer stops automatically at 48th clocks after timer start<br>$00000100_B$: WCK2DQO timer stops automatically at 64th clocks after timer start<br>---------- Thru ----------<br>$00111111_B$: WCK2DQO timer stops automatically at (63X16)th clocks after timer start<br>$01XXXXXX_B$: WCK2DQO timer stops automatically at 2048th clocks after timer start<br>$10XXXXXX_B$: WCK2DQO timer stops automatically at 4096th clocks after timer start<br>$11XXXXXX_B$: WCK2DQO timer stops automatically at 8192nd clocks after timer start | 1, 2 |

NOTE 1 MPC command with OP[7:0]=$10000100_B$ (Stop WCK2DQO Interval Oscillator) stops WCK2DQO interval timer in case of MR40 OP[7:0] = $00000000_B$.

NOTE 2 MPC command with OP[7:0]=$10000100_B$ (Stop WCK2DQO Interval Oscillator) is illegal with non-zero values in MR40 OP[7:0].

### 6.2.1 Mode Register definition (Cont'd)

**Table 146 — MR41 Register Information (MA[7:0] = $29_H$)**

| OP[7] | OP[6] | OP[5] | OP[4] | OP[3] | OP[2] | OP[1] | OP[0] |
|---|---|---|---|---|---|---|---|
| NT DQ ODT | | | PPRE | RFU | | | |

| Function | Register Type | Operand | Data | Notes |
|---|---|---|---|---|
| NT DQ ODT (Non-Target DQ Bus Receiver On-Die-Termination) | Write-only | OP[7:5] | $000_B$: Disable<br>$001_B$: RZQ/1<br>$010_B$: RZQ/2<br>$011_B$: RZQ/3 (default)<br>$100_B$: RZQ/4<br>$101_B$: RZQ/5<br>$110_B$: RZQ/6<br>$111_B$: RFU | 1,2,3 |
| PPRE | | OP[4] | $0_B$: PPR Disable (default)<br>$1_B$: PPR Enable | |

NOTE 1 All values are "typical". The actual value after calibration will be within the specified tolerance for a given voltage and temperature. Re-calibration may be required as voltage and temperature vary.

NOTE 2 There are three physical registers assigned to each bit of this MR parameter, designated set point 0, set point 1, and set point 2. Only the registers for the set point determined by the state of the FSP-WR bit (MR16 OP[1:0]) will be written to with an MRW command to this MR address.

NOTE 3 There are three physical registers assigned to each bit of this MR parameter, designated set point 0, set point 1, and set point 2. The device will operate only according to the values stored in the registers for the active set point, i.e., the set point determined by the state of the FSP-OP bit (MR16 OP[3:2]). The values in the registers for the inactive set point will be ignored by the device, and may be changed without affecting device operation.

**Table 147 — MR42 Register Information (MA[7:0] = $2A_H$)**

| OP[7] | OP[6] | OP[5] | OP[4] | OP[3] | OP[2] | OP[1] | OP[0] |
|---|---|---|---|---|---|---|---|
| PPR Key Protection | | | | | | | |

**Table 148 — MR42 definition**

| Function | Register Type | Operand | Data | Notes |
|---|---|---|---|---|
| PPR Key Protection | Write-only | OP[7:0] | PPR Key Protection code | 1,2 |

NOTE 1 PPR protection code is vendor specific. Please refer vendor data sheet.

NOTE 2 PPR entry and exit sequence details are described in 7.7.4 Post Package Repair.

**Table 149 - MR43 Register Information (MA[7:0] = $2B_H$)**

| OP[7] | OP[6] | OP[5] | OP[4] | OP[3] | OP[2] | OP[1] | OP[0] |
|---|---|---|---|---|---|---|---|
| DBE_flag | SBEC_Rule | SBE_count | | | | | |

**Table 150 – MR43 definition**

| Function | Register Type | Operand | Data | Notes |
|---|---|---|---|---|
| DBE_flag | Read-only | OP[7] | $0_B$: No double-bit errors have occurred on the DRAM interface<br>$1_B$: One or more double-bit errors have occurred on the DRAM interface | 1,2,4,6 |
| SBEC_Rule | | OP[6] | $0_B$: Simultaneous SBE on each DQ byte and DMI are counted as one error<br>$1_B$: Simultaneous SBE on each DQ byte and DMI are independently counted | 3 |
| SBE_count | | OP[5:0] | The number of times a single-bit error or errors have occurred on the DRAM interface | 1,2,3,4,5 |

NOTE 1 These bits are cleared on power-up, DRAM reset, any Power-Down Exit, and on each read of this mode register. They are also held in the cleared state whenever MR22 OP[5:4]=00b. Because time is required for the DRAM to perform the clear on reads, the delay after reading this mode register should be tMRR + tMRW (rather than simply tMRR as required on most registers).

NOTE 2 The DRAM should disable detection & recording of ECC errors during Write-FIFO commands, as these are used for training purposes and some errors are expected during training.

NOTE 3 In a x16 DRAM device, up to 4 single-bit errors could potentially be detected in a single BL16 burst (byte 0 data SBE, byte 0 DMI SBE, byte 1 data SBE, and byte 1 DMI SBE).
SBEC_Rule $0_B$: Any combination of these 4 simultaneous errors is considered a single SBE occurrence, and would only increment the SBE_count by 1. A BL32 burst can have up to 2 such SBE occurrences, and could increment the SBE_count by up to 2. In a x8 DRAM device, any simultaneous combination of data SBE and DMI SBE is considered a single SBE occurrence, and would only increment the SBE_count by 1 (up to 2 in a BL32 burst).
SBEC_Rule $1_B$ : Each of the maximum 4 simultaneous errors is considered as an independent error and would increment the SBE count up to 4. A BL32 burst can have up to 8 such SBE occurrences, and could increment the SBE_count by up to 8. In a x8 DRAM device, any simultaneous combination of data SBE and DMI SBE is considered a independent SBE occurrence, and would only increment the SBE_count by up to 2 (up to 4 in a BL32 burst).

NOTE 4 In x16 mode, errors from either interface byte are stored in a single register per DRAM (SBE_count would be the number of SBE occurrences on BOTH bytes & DBE_flag would indicate a DBE on EITHER byte). In x8 mode, errors are stored for a single interface byte and MRR returns both copies of this register, each on its corresponding byte lane.

NOTE 5 SBE_count should be a saturating counter.

NOTE 6 Once set, the DBE_flag bit remains set until explicitly cleared by one of the conditions described in note 1 above.

**Table 151 - MR44 Register Information (MA[7:0] = $2C_H$)**

| OP[7] | OP[6] | OP[5] | OP[4] | OP[3] | OP[2] | OP[1] | OP[0] |
|---|---|---|---|---|---|---|---|
| Data ECC Syndrome [7:0] | | | | | | | |
| S[7] | S[6] | S[5] | S[4] | S[3] | S[2] | S[1] | S[0] |

**Table 152 - MR44 definition**

| Function | Register Type | Operand | Data | Notes |
|---|---|---|---|---|
| Data ECC Syndrome [7:0] | Read-only | OP[7:0] | Bits 7:0 of the data ECC syndrome from the most recent single-bit error | 1,2,3,4,5,6 |

NOTE 1 These bits are cleared on power-up, DRAM reset, any Power-Down Exit, and on each read of this mode register. They are also held in the cleared state whenever MR22 OP[5:4]=$00_B$. Because time is required for the DRAM to perform the clear on reads, the delay after reading this mode register should be tMRR + tMRW (rather than simply tMRR as required on most registers).

NOTE 2 The DRAM should disable detection & recording of ECC errors during Write-FIFO commands, as these are used for training purposes and some errors are expected during training.

NOTE 3 In x16 mode, error syndromes from either interface byte are stored in a single register per DRAM. In x8 mode, error syndromes are stored for a single interface byte and MRR returns both copies of this register, each on its corresponding byte lane.

NOTE 4 In x16 mode, it is possible for errors to occur on both bytes simultaneously. In this rare case, only the syndrome from DQ[7:0] should be stored.

NOTE 5 Regardless of detecting a data ECC error or a DMI ECC error, both syndromes should be stored at either error occurrence.

NOTE 6 The error syndrome is not affected by a DBE and retains its previous value.

**Table 153 - MR45 Register Information (MA[7:0] = $2D_H$)**

| OP[7] | OP[6] | OP[5] | OP[4] | OP[3] | OP[2] | OP[1] | OP[0] |
|---|---|---|---|---|---|---|---|
| Data ECC Syndrome [8] | Error Byte Lane | DMI ECC Syndrome | | | | | |
| S[8] | Error Byte Lane | DS[5] | DS[4] | DS[3] | DS[2] | DS[1] | DS[0] |

**Table 154 – MR45 definition**

| Function | Register Type | Operand | Data | Notes |
|---|---|---|---|---|
| Data ECC Syndrome[8] (S[8]) | Read-only | OP[7] | Bit 8 of the data ECC syndrome from the most recent single-bit error | 1,2,3,4,5,7 |
| Error Byte Lane | | OP[6] | $0_B$: The most recent single bit error occurred on DQ[7:0] or DMI0<br>$1_B$: The most recent single bit error occurred on DQ[15:8] or DMI1 | 1,2,3,4,5,6,8 |
| DMI ECC Syndrome (DS[5:0]) | | OP[5:0] | The DMI ECC syndrome from the most recent single-bit error | 1,2,3,4,5,7 |

NOTE 1 These bits are cleared on power-up, DRAM reset, any Power-Down Exit, and on each read of this mode register. They are also held in the cleared state whenever MR22 OP[5:4]=00b. Because time is required for the DRAM to perform the clear on reads, the delay after reading this mode register should be tMRR + tMRW (rather than simply tMRR as required on most registers).

NOTE 2 The DRAM should disable detection & recording of ECC errors during Write-FIFO commands, as these are used for training purposes and some errors are expected during training.

NOTE 3 In x16 mode, error syndromes from either interface byte are stored in a single register per DRAM. In x8 mode, error syndromes are stored for a single interface byte and MRR returns both copies of this register, each on its corresponding byte lane.

NOTE 4 In x16 mode, it is possible for single-bit errors to occur on both bytes simultaneously. In this rare case, only the error syndromes and error byte lane from byte 0 (DQ[7:0] & DMI0) should be stored.

NOTE 5 Regardless of detecting a data ECC error or a DMI ECC error, **both** syndromes should be stored at either error occurrence.

NOTE 6 In x8 mode, this bit is unused and shall always read back as 0.

NOTE 7 These syndrome fields are not affected by a DBE and retains their previous values.

NOTE 8 The Error Byte Lane is only updated by a SBE.

The following talbe is provided to help clarify when and how each field is updated.

**Table 155 - Updating ECC Syndromes and Error Byte Lane**

| Errors at Byte 0 | Error at Byte 1 | Syndromes (MR44 and MR45 OP[7] & OP[5:0]) | Error Byte Lane (MR45 OP[6]) |
|---|---|---|---|
| None | None | No Change | No Change |
| SBE | None | Byte 0 | Byte 0 |
| DBE | None | No Change | No Change |
| None | SBE | Byte 1 | Byte 1 |
| SBE | SBE | Byte 0 | Byte 0 |
| DBE | SBE | Byte 1 | Byte 1 |
| None | DBE | No Change | No Change |
| SBE | DBE | Byte 0 | Byte 0 |
| DBE | DBE | No Change | No Change |

**Table 156 — MR46 Register Information (MA[5:0] = $2E_H$)**

| OP[7] | OP[6] | OP[5] | OP[4] | OP[3] | OP[2] | OP[1] | OP[0] |
|---|---|---|---|---|---|---|---|
| RFU | | | | | FIFO RDQS Training | RDQS Toggle | Enhanced RDQS |

**Table 157 — MR46 definition**

| Function | Register Type | Operand | Data | Notes |
|---|---|---|---|---|
| Enhanced RDQS (Enhanced RDQS training mode) | Write-only | OP[0] | $0_B$: Disabled (default)<br>$1_B$: Enhanced RDQS training mode Enabled | |
| RDQS Toggle (RDQS toggle mode) | | OP[1] | $0_B$: Disabled (default)<br>$1_B$: RDQS toggle mode Enabled | |
| FIFO RDQS Training (WCK-RDQS_t/Parity Training) | | OP[2] | $0_B$: Disabled (default)<br>$1_B$: WCK-RDQS_t/Parity Training Enabled | 1 |
| NOTE 1 When MR46 OP[3] = $1_B$, Write FIFO command will allow data to be written through the RDQS_t pin. The data written via the RDQS_t pin can then be read back via the DMI by a Read FIFO command. | | | | |

### 6.2.1 Mode Register definition (Cont'd)

**Table 158 — MR47 Register Information (MA[7:0] = $2F_H$)**

| OP[7] | OP[6] | OP[5] | OP[4] | OP[3] | OP[2] | OP[1] | OP[0] |
|---|---|---|---|---|---|---|---|
| Serial ID-1 | | | | | | | |

**Table 159 — MR47 Definition**

| Function | Register Type | Operand | Data | Notes |
|---|---|---|---|---|
| LPDDR5 Serial ID-1 | Read Only | OP[7:0] | Serial ID-1 | 1 |

NOTE 1 MR47 is vendor specific.

**Table 160 — MR48 Register Information (MA[7:0] = $30_H$)**

| OP[7] | OP[6] | OP[5] | OP[4] | OP[3] | OP[2] | OP[1] | OP[0] |
|---|---|---|---|---|---|---|---|
| Serial ID-2 | | | | | | | |

**Table 161 — MR48 Definition**

| Function | Register Type | Operand | Data | Notes |
|---|---|---|---|---|
| LPDDR5 Serial ID-2 | Read Only | OP[7:0] | Serial ID-2 | 1 |

NOTE 1 MR48 is vendor specific.

**Table 162 — MR49 Register Information (MA[7:0] = $31_H$)**

| OP[7] | OP[6] | OP[5] | OP[4] | OP[3] | OP[2] | OP[1] | OP[0] |
|---|---|---|---|---|---|---|---|
| Serial ID-3 | | | | | | | |

**Table 163 — MR49 Definition**

| Function | Register Type | Operand | Data | Notes |
|---|---|---|---|---|
| LPDDR5 Serial ID-3 | Read Only | OP[7:0] | Serial ID-3 | 1 |

NOTE 1 MR49 is vendor specific

**Table 164 — MR50 Register Information (MA[7:0] = $32_H$)**

| OP[7] | OP[6] | OP[5] | OP[4] | OP[3] | OP[2] | OP[1] | OP[0] |
|---|---|---|---|---|---|---|---|
| Serial ID-4 | | | | | | | |

**Table 165 — MR50 Definition**

| Function | Register Type | Operand | Data | Notes |
|---|---|---|---|---|
| LPDDR5 Serial ID-4 | Read Only | OP[7:0] | Serial ID-4 | 1 |

NOTE 1 MR50 is vendor specific.

**Table 166 — MR51 Register Information (MA[7:0] = $33_H$)**

| OP[7] | OP[6] | OP[5] | OP[4] | OP[3] | OP[2] | OP[1] | OP[0] |
|---|---|---|---|---|---|---|---|
| Serial ID-5 | | | | | | | |

**Table 167 — MR51 Definition**

| Function | Register Type | Operand | Data | Notes |
|---|---|---|---|---|
| LPDDR5 Serial ID-5 | Read Only | OP[7:0] | Serial ID-5 | 1 |

NOTE 1 MR51 is vendor specific.

### 6.2.1 Mode Register definition (Cont'd)

**Table 168 — MR52 Register Information (MA[7:0] = $34_H$)**

| OP[7] | OP[6] | OP[5] | OP[4] | OP[3] | OP[2] | OP[1] | OP[0] |
|---|---|---|---|---|---|---|---|
| Serial ID-6 | | | | | | | |

**Table 169 — MR52 Definition**

| Function | Register Type | Operand | Data | Notes |
|---|---|---|---|---|
| LPDDR5 Serial ID-6 | Read Only | OP[7:0] | Serial ID-6 | 1 |

NOTE 1 MR52 is vendor specific.

**Table 170 — MR53 Register Information (MA[7:0] = $35_H$)**

| OP[7] | OP[6] | OP[5] | OP[4] | OP[3] | OP[2] | OP[1] | OP[0] |
|---|---|---|---|---|---|---|---|
| Serial ID-7 | | | | | | | |

**Table 171 — MR53 Definition**

| Function | Register Type | Operand | Data | Notes |
|---|---|---|---|---|
| LPDDR5 Serial ID-7 | Read Only | OP[7:0] | Serial ID-7 | 1 |

NOTE 1 MR53 is vendor specific.

**Table 172 — MR54 Register Information (MA[7:0] = $36_H$)**

| OP[7] | OP[6] | OP[5] | OP[4] | OP[3] | OP[2] | OP[1] | OP[0] |
|---|---|---|---|---|---|---|---|
| Serial ID-8 | | | | | | | |

**Table 173 — MR54 Definition**

| Function | Register Type | Operand | Data | Notes |
|---|---|---|---|---|
| LPDDR5 Serial ID-8 | Read Only | OP[7:0] | Serial ID-8 | 1 |

NOTE 1 MR54 is vendor specific.

**Table 174 - MR56 Register Information (MA[7:0] = $38_H$)**

| OP[7] | OP[6] | OP[5] | OP[4] | OP[3] | OP[2] | OP[1] | OP[0] |
|---|---|---|---|---|---|---|---|
| Valid 0 or 1 | | | | | | | |

**Table 175 - MR56 Definition**

| Function | Register Type | Operand | Data | Notes |
|---|---|---|---|---|
| SDRAM will ignore | Write Only | OP[7:0] | Don't Care | 1 |

NOTE 1 This register is reserved for testing purpose. The logical data values written to OP[7:0] shall have no effect on SDRAM operation, however timings need to be observed as for any other MR access command.

**Table 176 - MR60 Register Information (MA[7:0] = $3C_H$)**

| OP[7] | OP[6] | OP[5] | OP[4] | OP[3] | OP[2] | OP[1] | OP[0] |
|---|---|---|---|---|---|---|---|
| Valid 0 or 1 | | | | | | | |

**Table 177 - MR60 Definition**

| Function | Register Type | Operand | Data | Notes |
|---|---|---|---|---|
| SDRAM will ignore | Write Only | OP[7:0] | Don't Care | 1 |

NOTE 1 This register is reserved for testing purpose. The logical data values written to OP[7:0] shall have no effect on SDRAM operation, however timings need to be observed as for any other MR access command.

# 7 Operating

## 7.1 Truth Table

Operation or timing that is not specified is illegal, and after such an event, in order to guarantee proper operation, the LPDDR5 device must be reset or power-cycled and then restarted through the specified initialization sequence before normal operation can continue.

### 7.1.1 Command Truth Table

**Table 178 — Command Truth Table**

| SDRAM COMMAND | BK ORG (BG, 16B, 8B) | SDR CMD PIN | DDR COMMAND PINS | | | | | | | CK_t edge | Notes |
|---|---|---|---|---|---|---|---|---|---|---|---|
| | | CS | CA0 | CA1 | CA2 | CA3 | CA4 | CA5 | CA6 | | |
| DESELECT (DES) | Any | L | X | X | X | X | X | X | X | R1 | 1, 2 |
| | | X | X | X | X | X | X | X | X | F1 | |
| NO OPERATION (NOP) | Any | H | L | L | L | L | L | L | L | R1 | 1, 2 |
| | | X | X | X | X | X | X | X | X | F1 | |
| POWER DOWN ENTRY (PDE) | Any | H | L | L | L | L | L | L | H | R1 | 1, 2, 12 |
| | | L | X | X | X | X | X | X | X | R2 | |
| ACTIVATE-1 (ACT-1) | Any | H | H | H | H | R14 | R15 | R16 | R17 | R1 | 1, 2, 3, 4 |
| | BG | X | BA0 | BA1 | BG0 | BG1 | R11 | R12 | R13 | F1 | |
| | 16B | | BA0 | BA1 | BA2 | BA3 | | | | | |
| | 8B | | BA0 | BA1 | BA2 | V | | | | | |
| ACTIVATE-2 (ACT-2) | Any | H | H | H | L | R7 | R8 | R9 | R10 | R1 | 1, 2, 4 |
| | | X | R0 | R1 | R2 | R3 | R4 | R5 | R6 | F1 | |
| PRECHARGE (PRE) (Per Bank, All Banks) | Any | H | L | L | L | H | H | H | H | R1 | 1, 2, 3, 5 |
| | BG | X | BA0 | BA1 | BG0 | BG1 | V | V | AB | F1 | |
| | 16B | | BA0 | BA1 | BA2 | BA3 | | | | | |
| | 8B | | BA0 | BA1 | BA2 | V | | | | | |
| REFRESH (REF) (Per Bank, All Banks) | Any | H | L | L | L | H | H | H | L | R1 | 1, 2, 3, 5, 14 |
| | BG | X | BA0 | BA1 | BG0 | RFM | SB0 | V | AB | F1 | |
| | 16B | | BA0 | BA1 | BA2 | | SB0 | V | | | |
| | 8B | | BA0 | BA1 | BA2 | | V | SB1 | | | |
| MASK WRITE (MWR) | Any | H | L | H | L | C0 | C3 | C4 | C5 | R1 | 1, 2, 3, 6, 7 |
| | BG | X | BA0 | BA1 | BG0 | BG1 | C1 | C2 | AP | F1 | |
| | 16B | | BA0 | BA1 | BA2 | BA3 | | | | | |
| | 8B | | BA0 | BA1 | BA2 | V | | | | | |
| WRITE (WR16 or WR) | Any | H | L | H | H | C0 | C3 | C4 | C5 | R1 | 1, 2, 3, 6, 7, 8 |
| | BG | X | BA0 | BA1 | BG0 | BG1 | C1 | C2 | AP | F1 | |
| | 16B | | BA0 | BA1 | BA2 | BA3 | | | | | |
| | 8B | | BA0 | BA1 | BA2 | V | | | | | |
| WRITE32 (WR32) | BG/16B | H | L | L | H | L | C3 | C4 | C5 | R1 | 1, 2, 3, 6, 7, 8 |
| | BG | X | BA0 | BA1 | BG0 | BG1 | C1 | C2 | AP | F1 | |
| | 16B | | BA0 | BA1 | BA2 | BA3 | | | | | |
| READ (RD16 or RD) | Any | H | H | L | L | C0 | C3 | C4 | C5 | R1 | 1, 2, 3, 6, 7, 10, 11 |
| | BG | X | BA0 | BA1 | BG0 | BG1 | C1 | C2 | AP | F1 | |
| | 16B | | BA0 | BA1 | BA2 | BA3 | | | | | |
| | 8B | | BA0 | BA1 | BA2 | B4 | | | | | |
| READ32 (RD32) | BG/16B | H | H | L | H | C0 | C3 | C4 | C5 | R1 | 1, 2, 3, 6, 7, 10, 11 |
| | BG | X | BA0 | BA1 | BG0 | BG1 | C1 | C2 | AP | F1 | |
| | 16B | | BA0 | BA1 | BA2 | BA3 | | | | | |

**Table 154 — Command Truth Table (cont'd)**

| SDRAM COMMAND | BK ORG (BG, 16B, 8B) | SDR CMD PIN | DDR COMMAND PINS | | | | | | | CK_t edge | Notes |
|---|---|---|---|---|---|---|---|---|---|---|---|
| | | CS | CA0 | CA1 | CA2 | CA3 | CA4 | CA5 | CA6 | | |
| CAS | Any | H | L | L | H | H | WS_WR | WS_RD | WS_FS | R1 | 1, 2, 7, 13 |
| | | X | DC0 | DC1 | DC2 | DC3 | WRX | WXSA | WXSB/ B3 | F1 | |
| MULTI PURPOSE COMMAND (MPC) | Any | H | L | L | L | L | H | H | OP7 | R1 | 1, 2 |
| | | X | OP0 | OP1 | OP2 | OP3 | OP4 | OP5 | OP6 | F1 | |
| SELF REFRESH ENTRY (SRE) | Any | H | L | L | L | H | L | H | H | R1 | 1, 2, 9 |
| | | X | V | V | V | V | V | DSM | PD | F1 | |
| SELF REFRESH EXIT (SRX) | Any | H | L | L | L | H | L | H | L | R1 | 1, 2 |
| | | X | V | V | V | V | V | V | V | F1 | |
| MODE REGISTER WRITE-1 (MRW-1) | Any | H | L | L | L | H | H | L | H | R1 | 1, 2 |
| | | X | MA0 | MA1 | MA2 | MA3 | MA4 | MA5 | MA6 | F1 | |
| MODE REGISTER WRITE-2 (MRW-2) | Any | H | L | L | L | H | L | L | OP7 | R1 | 1, 2 |
| | | X | OP0 | OP1 | OP2 | OP3 | OP4 | OP5 | OP6 | F1 | |
| MODE REGISTER READ (MRR) | Any | H | L | L | L | H | H | L | L | R1 | 1, 2 |
| | | X | MA0 | MA1 | MA2 | MA3 | MA4 | MA5 | MA6 | F1 | |
| WRITE FIFO (WFF) | Any | H | L | L | L | L | L | H | H | R1 | 1, 2 |
| | | X | L | L | L | L | L | L | L | F1 | |
| READ FIFO (RFF) | Any | H | L | L | L | L | L | H | L | R1 | 1, 2 |
| | | X | L | L | L | L | L | L | L | F1 | |
| READ DQ CALIBRATION (RDC) | Any | H | L | L | L | L | H | L | H | R1 | 1, 2 |
| | | X | L | L | L | L | L | L | L | F1 | |

NOTE 1 LPDDR5 commands are one clock cycles long and defined by the states of CS at the rising edge (R1) of clock and CA[6:0] at the rising edge (R1) and the falling edge (F1) of clock. Note that some operations such as ACTIVATE, MODE REGISTER WRITE or WCK2CK SYNC (WS_RD, WS_WR, WS_FS) require two commands to initiate.

NOTE 2 "V" means "H" or "L" (a defined logic level). "X" means don't care in which case CK_t, CK_c and CA[6:0] can be floated.

NOTE 3 Bank Group Address BG[1:0] and Bank Address BA[1:0] determine which bank is to be operated upon.

NOTE 4 An ACTIVATE-1 command must be followed by an ACTIVATE-2 command. Only CAS, WRITE, MASK WRITE, READ, PRECHARGE (to a different bank) commands can be issued between ACTIVATE-1 and ACTIVATE-2 commands. The maximum timing gap between ACTIVATE-1 and ACTIVATE-2 commands are 8 clock cycles. An ACTIVATE-1 command must be issued first before issuing an ACTIVATE-2 command. Once an ACTIVATE-1 command is issued, an ACTIVATE-2 command must be issued before issuing another ACTIVATE-1 command.

NOTE 5 AB "HIGH" during PRECHARGE or REFRESH command indicates that command must be applied to all banks and bank address is a don't care.

NOTE 6 AP "HIGH" during WRITE, MASK WRITE or READ commands indicates that an auto-precharge will occur to the bank associated with the WRITE, MASK WRITE or READ command.

NOTE 7 CAS command is only required for WRITE, MASK WRITE or READ operation if optional low power features (DC0-3 or WRX/WXSA/WXSB) of these commands are required or if Burst Start Address (B3) is non-zero to READ or if WCK2CK SYNC (WS_RD, WS_WR) or FAST SYNC (WS_FS) is applied to a target device. CAS operands (DC0-3, WRX/WXSA/WXSB and B3) are valid to immediately following WRITE or READ only. In case of CAS-FAST_SYNC(WS_FS="H" AND WS_WR="L" AND WS_RD="L") or CAS-SYNC_OFF (WS_FS="H" AND WS_WR="H" AND WS_RD="H"), other CAS operands (DC0-3, WRX, WXSA, WXSB, B3) shall be "LOW". Valid DC0-3 or WRX/WXSA/WXSB operand(s) may be issued together with WCK2CK SYNC (WS_WR="H", WS_RD="L", WS_FS="L"). Valid B3 operand may be issued together with WCK2CK SYNC (WS_RD="H", WS_WR="L", WS_FS="L"). Refer to Table 179.

NOTE 8 WRITE32 (WRITE with BL32) command is valid in a BG/16B mode only. WRITE command is WR in an 8B mode and WR16 in a BG/16B mode.

NOTE 9 PD "HIGH" during SELF REFRESH ENTRY command indicates that both Self Refresh Entry and Power Down Entry will occur together. DSM "HIGH" during SELF REFRESH ENTRY command indicates that both Self Refresh Entry and Deep Sleep Mode Entry will occur together. Both PD "HIGH" and DSM "HIGH" are illegal.

NOTE 10 READ command includes Read Burst Start Address (B3, B4) associated with Burst Length setting, B3 for BL16 in a BG/16B mode, or B3, C0 for BL32 in a BG/16B mode, or B3, B4 for BL32 in an 8B mode. Refer to MR1 Burst Sequence Table.

NOTE 11 READ32 (READ with BL32) command is valid in a BG/16B mode only. READ command is RD in an 8B mode and RD16 in a BG/16B mode.

NOTE 12 CS shall be compliant to Power Down Entry/Exit timing requirements. Refer to Power Down Function and Timing Description.

NOTE 13 Refer to LPDDR5 low power function description, Data Copy function (DC0-DC3) and Write X function (WRX, WXSA, WXSB).

NOTE 14 Refer to LPDDR Refresh Management function description about RFM, SB0 and SB1 operands.

**Table 179 — Allowable CAS command operand(s) combination**

| Operation Mode | | CAS Command Operand(s) | | | | | |
|---|---|---|---|---|---|---|---|
| | WS_WR | WS_RD | WS_FS | DC0-3 | WRX | WXSA | WXSB/B3 |
| WCK2CK SYNC (WR) | H | L | L | LLLL | L | L | L |
| WCK2CK SYNC (WR) + Write Data Copy | H | L | L | VVVV | L | L | L |
| WCK2CK SYNC (WR) + Write X | H | L | L | LLLL | H | V | V |
| WCK2CK SYNC (RD) | L | H | L | LLLL | L | L | V |
| WCK2CK FAST SYNC | L | L | H | LLLL | L | L | L |
| WCK2CK SYNC OFF | H | H | H | LLLL | L | L | L |
| Write Data Copy | L | L | L | VVVV | L | L | L |
| Write X | L | L | L | LLLL | H | V | V |
| Non-Zero Burst Start Address for RD | L | L | L | LLLL | L | L | H |
| WCK SUSPEND | H | L | H | LLLL | L | L | L |
| Illegal | | Other Operands Combination | | | | | |

NOTE 1 "V" means "H" or "L" (a defined logic level).
NOTE 2 All CAS command operands are non-sticky.
NOTE 3 Write Data Copy function requires DC0-3 operands not to be all-zero.
NOTE 4 CAS-WCK_SUSPEND command is valid only when MR0 OP[2]=$1_B$ (Enhanced WCK Always On mode supported) and MR18 OP[4]= $1_B$ (WCK Always On mode enabled

## 7.2 WCK Operation

### 7.2.1 WCK2CK Synchronization operation

#### 7.2.1.1 WCK2CK Synchronization

An LPDDR5 SDRAM utilizes two types of clock with different frequencies. The frequency of WCK is four times or twice higher than the command clock, requiring an LPDDR5 SDRAM to have clock divider in the WCK clock tree. By dividing the WCK, the operation speed of DRAM internal circuits in WCK domain is reduced to half. However, the WCK divider initial state is unpredictable and results in two different states in an LPDDR5 SDRAM: aligned with CK state and miss-aligned with CK state. **Figure 63** illustrates these two cases.

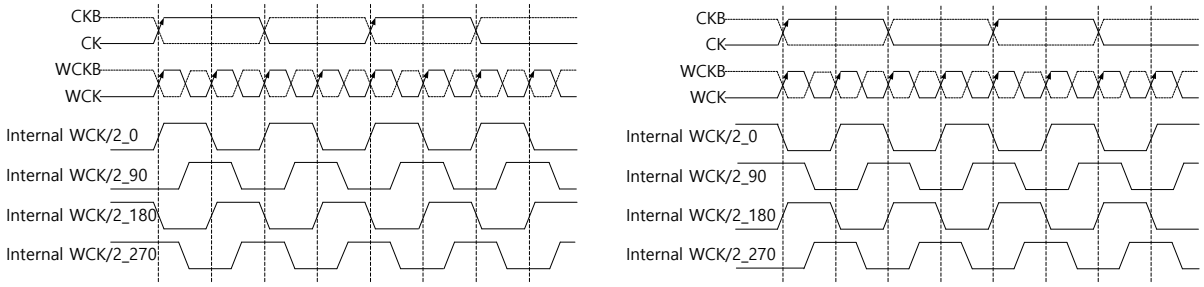


**Figure 63 — Aligned WCK/2_0 to CK (Left) & Miss-Aligned WCK/2_0 to CK (Right)**

The latency control unit inside the SDRAM performs clock domain change of WRITE or READ commands from CK domain to WCK domain. For error-free latency control, the latency control circuit must know whether the SDRAM is in aligned with CK state or miss-aligned with CK state. An LPDDR5 SDRAM is able to reset or detect its state by a process called WCK2CK Synchronization. When a SDRAM controller issues CAS command with the bit of WCK2CK Synchronization, the controller provides the SDRAM with half frequency WCK pulse to relax ISI and the timing margin. This operation is defined as WCK2CK Synchronization. At the timing when the SDRAM performs WCK2CK Sync operation, the SDRAM controller must provide the SDRAM with half frequency WCK pulse to relax WCK2CK Sync timing margin.

#### 7.2.1.2 CAS Command with WCK2CK Synchronization Bits

The LPDDR5 WCK2CK Synchronization process is initiated by a CAS command with the related bit enabled. The CAS command with WCK2CK Synchronization should be issued before the write or READ command. Table 180 shows the CAS command with WCK2CK Synchronization bit (WS_WR, WS_RD, WS_FAST). CAS command with “1” at WCK2CK Synchronization flag bit informs DRAM WCK2CK Synchronization is required.

**Table 180 — CAS command with WCK2CK Synchronization bits**

| Command | SDR Command Pin | DDR Command Pins | | | | | | | |
|---|---|---|---|---|---|---|---|---|---|
| | CS | CA0 | CA1 | CA2 | CA3 | CA4 | CA5 | CA6 | CK_t edge |
| CAS | H | L | L | H | H | WS_WR | WS_RD | WS_FS | R1 |
| | X | DC0 | DC1 | DC2 | DC3 | WRX | V | B3 | F1 |

### 7.2.1.2 CAS Command with WCK2CK Synchronization Bits (Cont'd)

Figure 64 shows the LPDDR5 WCK2CK Sync operation by CAS command with WCK2CK Sync operand enabled (WS_WR or WS_RD or WS_FAST =1). DRAM controller must start to drive WCK as WCK_t/WCK_c=L/H after tWCKENL. The WCK2CK Sync operation occurs after tWCKENL+tWCKPRE_static followed by half-rate WCK during 1tCK. Before the WCK2CK Sync, WCK must toggle once to reduce the channel ISI in WCK. WCK2CK Training must be performed prior to WCK2CK Synchronization. The DRAM requires the proper WCK toggle pattern prior to insure WCK2CK sync properly. After the WCK2CK Sync is completed, the WCK must continue to toggle until the end of the read or write bursts are completed.

CAS(WS_WR=1) should be followed by WRITE command immediately. CAS(WS_RD=1) should also be followed by READ command immediately. CAS(WS_FAST=1) is only used as a standalone command and can be simultaneously issued to multi-ranks. Refer to 8.1.2, CAS command timing constraints. After Synchronization, the DRAM controller must keep WCK toggling until DQ bursts of READ or WRITE are completed or CAS(WCK Buffer off) command is issued. For Example, After PDX(Power Down Exit), CAS command with WCK2CK Sync operand enabled (WS_WR or WS_RD or WS_FAST=1) must be issued before the WRITE command or READ command. Because during Power Down, WCK2CK sync state is lost.

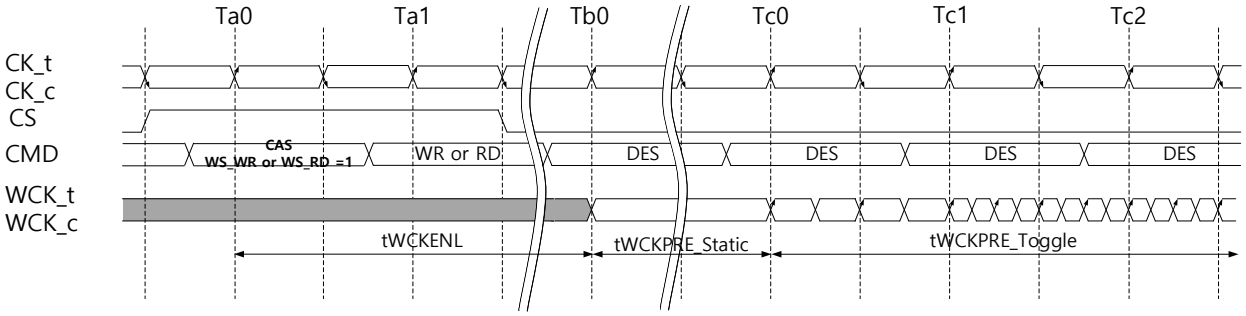


**Figure 64 — LPDDR5 WCK2CK Sync operation by CAS command with WCK2CK Sync operand enabled**

### 7.2.1.3 WCK2CK Sync operation followed by a WRITE command

When there is no on-going DQ burst, the DRAM controller turns off WCK drivers to enter Hi-Z state to remove current through WCK ODT (on-die termination) and an LPDDR5 SDRAM also turns off its WCK buffers. Turning off DRAM controller WCK driver or DRAM WCK buffer puts the LPDDR5 DRAM WCK divider into an unknown state, requiring a new WCK2CK Sync sequence before starting DQ operation (or WCK operation for READ/ WRITE/ Training). Therefore, the DRAM controller must track the WCK2CK Sync state of each DRAM, and issue CAS WCK2CK Sync command according to the WCK2CK Sync state before requesting DQ operation (or WCK operation) for READ/ WRITE/ Training operation.

A WCK2CK Sync immediately followed by WRITE operation is shown in Figure 65. The CAS WCK2CK Sync command will have WS_WR=1 when it is followed by WRITE command. No command is allowed between CAS(WS_WR=1) command and WRITE command, and CAS(WS_WR=1) command should be immediately followed by WRITE command. tWCKENL_WR is the delay required by an LPDDR5 DRAM to prepare for WCK2CK Sync operation after the CAS command with WS_WR=1.

### 7.2.1.3 WCK2CK Sync operation followed by a WRITE command (Cont'd)

At Td0 in Figure 65, tWCKENL_WR+tWCKPRE_Static+tWCKPRE_Toggle_WR from the WCK2CK Sync is satisfied and the memory controller starts the WRITE DQ burst. The WRITE DQ burst is completed and after tWCKPST, the memory controller may stop WCK toggle and put the WCK drivers into hi-Z state and WCK buffers can be also turned off for power saving.

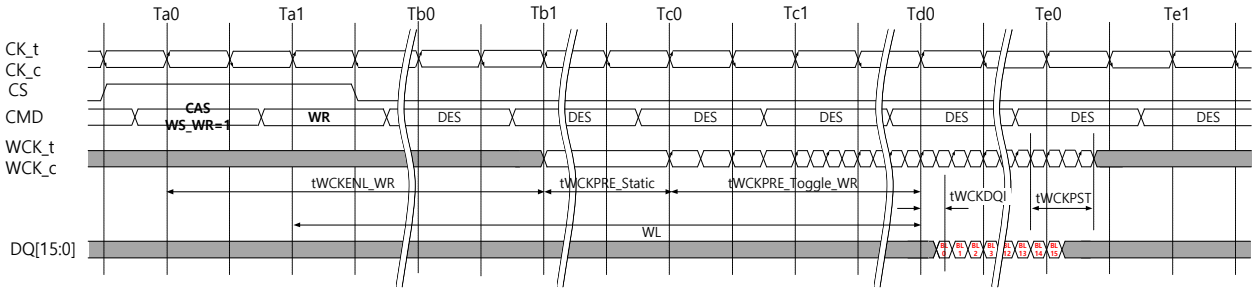


**Figure 65 — WCK2CK Sync operation followed by a WRITE command**

**Table 181 — WCK2CK Sync AC Parameters for WRITE operation**

| WCK:CK Ratio | Data Rate [Mbps] | | CK Frequency [Mbps] | | WL(SetA) [nCK] | WL(SetB) [nCK] | tWCKENL_WR(SetA) [nCK] | tWCKENL_WR(SetB) [nCK] | tWCKPRE_Static [nCK] | tWCKPRE toggle_WR [nCK] | tWCKPRE total_WR [nCK] |
|---|---|---|---|---|---|---|---|---|---|---|---|
| | Lower Limit(>) | Upper Limit(≤) | Lower Limit(>) | Upper Limit(≤) | | | | | | | |
| 2:1 | 40 | 533 | 10 | 133 | 4 | 4 | 1 | 1 | 1 | 3 | 4 |
| | 533 | 1067 | 133 | 267 | 4 | 6 | 0 | 2 | 2 | 3 | 5 |
| | 1067 | 1600 | 267 | 400 | 6 | 8 | 1 | 3 | 2 | 4 | 6 |
| | 1600 | 2133 | 400 | 533 | 8 | 10 | 2 | 4 | 3 | 4 | 7 |
| | 2133 | 2750 | 533 | 688 | 8 | 14 | 1 | 7 | 4 | 4 | 8 |
| | 2750 | 3200 | 688 | 800 | 10 | 16 | 3 | 9 | 4 | 4 | 8 |
| 4:1 | 40 | 533 | 5 | 67 | 2 | 2 | 0 | 0 | 1 | 2 | 3 |
| | 533 | 1067 | 67 | 133 | 2 | 3 | 0 | 1 | 1 | 2 | 3 |
| | 1067 | 1600 | 133 | 200 | 3 | 4 | 1 | 2 | 1 | 2 | 3 |
| | 1600 | 2133 | 200 | 267 | 4 | 5 | 1 | 2 | 2 | 2 | 4 |
| | 2133 | 2750 | 267 | 344 | 4 | 7 | 1 | 4 | 2 | 2 | 4 |
| | 2750 | 3200 | 344 | 400 | 5 | 8 | 2 | 5 | 2 | 2 | 4 |
| | 3200 | 3733 | 400 | 467 | 6 | 9 | 2 | 5 | 3 | 2 | 5 |
| | 3733 | 4267 | 467 | 533 | 6 | 11 | 2 | 7 | 3 | 2 | 5 |
| | 4267 | 4800 | 533 | 600 | 7 | 12 | 3 | 8 | 3 | 2 | 5 |
| | 4800 | 5500 | 600 | 688 | 8 | 14 | 3 | 9 | 4 | 2 | 6 |
| | 5500 | 6000 | 688 | 750 | 9 | 15 | 4 | 10 | 4 | 2 | 6 |
| | 6000 | 6400 | 750 | 800 | 9 | 16 | 4 | 11 | 4 | 2 | 6 |

NOTE 1 tWCKENL_WR = WL + 1 - tWCKPRE_total_WR
NOTE 2 tWCKPRE_total_WR = tWCKPRE_toggle_WR + tWCKPRE_Static

#### 7.2.1.4 WCK2CK Sync operation followed by a READ command

Figure 66 illustrates the WCK2CK Sync operation followed by a READ command. The CAS WCK2CK Sync command must have WS_RD=1 when it is followed by READ command. No command is allowed between CAS(WS_RD=1) command and READ command, and CAS(WS_RD=1) command should be immediately followed by READ command. tWCKENL_RD is the optimal delay which guarantee WCK2CK sync operation and minimize WCK toggling power.

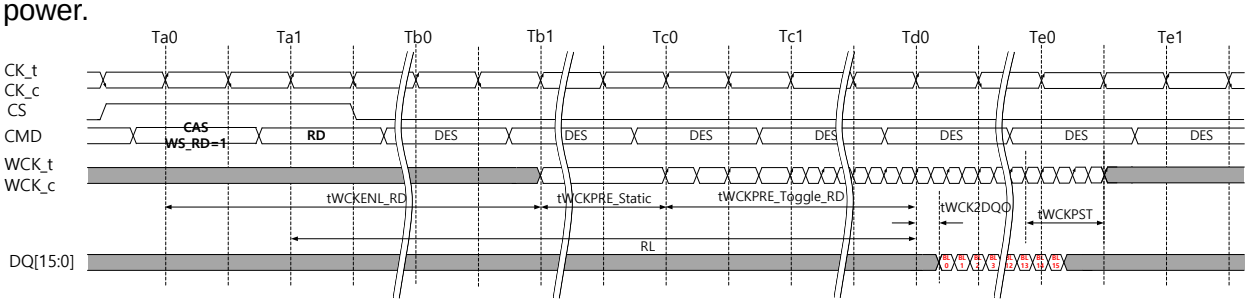


**Figure 66 — WCK2CK Sync operation followed by a READ command**

### 7.2.1.4 WCK2CK Sync operation followed by a READ command (Cont'd)

**Table 182 — WCK2CK Sync AC Parameters for Read operation**

DVFSC disabled (MR19 OP[1:0] = $00_B$), Read Link ECC off (MR22 OP[7:6]=$00_B$)

| WCK:CK ratio | Data Rate Range [Mbps] | | CK Frequency Range [MHz] | | WCK2CK Sync READ AC Parameters [nCK] | | | | | | | | |
|---|---|---|---|---|---|---|---|---|---|---|---|---|---|
| | Lower Limit (>) | Upper Limit (≤) | Lower Limit (>) | Upper Limit (≤) | READ Latency | | | tWCKENL_RD | | | tWCKPRE_static | tWCKPRE_toggle_RD | tWCKPRE_total_RD |
| | | | | | Set 0 | Set 1 | Set 2 | Set 0 | Set 1 | Set 2 | | | |
| 2:1 | 40 | 533 | 10 | 133 | 6 | 6 | 6 | 0 | 0 | 0 | 1 | 6 | 7 |
| | 533 | 1067 | 133 | 267 | 8 | 8 | 8 | 0 | 0 | 0 | 2 | 7 | 9 |
| | 1067 | 1600 | 267 | 400 | 10 | 10 | 12 | 1 | 1 | 3 | 2 | 8 | 10 |
| | 1600 | 2133 | 400 | 533 | 12 | 14 | 14 | 2 | 4 | 4 | 3 | 8 | 11 |
| | 2133 | 2750 | 533 | 688 | 16 | 16 | 18 | 3 | 3 | 5 | 4 | 10 | 14 |
| | 2750 | 3200 | 688 | 800 | 18 | 20 | 20 | 5 | 7 | 7 | 4 | 10 | 14 |
| 4:1 | 40 | 533 | 5 | 67 | 3 | 3 | 3 | 0 | 0 | 0 | 1 | 3 | 4 |
| | 533 | 1067 | 67 | 133 | 4 | 4 | 4 | 0 | 0 | 0 | 1 | 4 | 5 |
| | 1067 | 1600 | 133 | 200 | 5 | 5 | 6 | 1 | 1 | 2 | 1 | 4 | 5 |
| | 1600 | 2133 | 200 | 267 | 6 | 7 | 7 | 1 | 2 | 2 | 2 | 4 | 6 |
| | 2133 | 2750 | 267 | 344 | 8 | 8 | 9 | 2 | 2 | 3 | 2 | 5 | 7 |
| | 2750 | 3200 | 344 | 400 | 9 | 10 | 10 | 3 | 4 | 4 | 2 | 5 | 7 |
| | 3200 | 3733 | 400 | 467 | 10 | 11 | 12 | 3 | 4 | 5 | 3 | 5 | 8 |
| | 3733 | 4267 | 467 | 533 | 12 | 13 | 14 | 4 | 5 | 6 | 3 | 6 | 9 |
| | 4267 | 4800 | 533 | 600 | 13 | 14 | 15 | 5 | 6 | 7 | 3 | 6 | 9 |
| | 4800 | 5500 | 600 | 688 | 15 | 16 | 17 | 6 | 7 | 8 | 4 | 6 | 10 |
| | 5500 | 6000 | 688 | 750 | 16 | 17 | 19 | 6 | 7 | 9 | 4 | 7 | 11 |
| | 6000 | 6400 | 750 | 800 | 17 | 18 | 20 | 7 | 8 | 10 | 4 | 7 | 11 |

NOTE 1 tWCKENL_RD = RL + 1 - tWCKPRE_total_RD

NOTE 2 tWCKPRE_total_RD = tWCKPRE_toggle_RD + tWCKPRE_Static

NOTE 3 The LPDDR5 SDRAM device should not be operated at a frequency above the upper frequency limit, or below the lower frequency limit, shown for each RL value.

NOTE 4 Some operating features can affect Read Latency:

| Feature | Description |
|---|---|
| 1 | Byte Mode |
| 2 | Read DBI and/or Read Data Copy |

NOTE 5 RL Set 0 applies when no features are enabled.
RL Set 1 applies when one feature is enabled (1 or 2).
RL Set 2 applies when two features are enabled.

### 7.2.1.4 WCK2CK Sync operation followed by a READ command (Cont'd)

**Table 183 — WCK2CK Sync AC Parameters for Read operation**

DVFSC enabled (MR19 OP[1:0] = $01_B$), Read Link ECC disable (MR22 OP[7:6]=$00_B$)

| WCK:CK ratio | Data Rate Range [Mbps] | | CK Frequency Range [MHz] | | WCK2CK Sync READ AC Parameters [nCK] | | | | | | | | |
|---|---|---|---|---|---|---|---|---|---|---|---|---|---|
| | | | | | READ Latency | | | tWCKENL_RD | | | tWCKPRE_static | tWCKPRE_toggle_RD | tWCKPRE_total_RD |
| | Lower Limit (>) | Upper Limit (≤) | Lower Limit (>) | Upper Limit (≤) | Set 0 | Set 1 | Set 2 | Set 0 | Set 1 | Set 2 | | | |
| 2:1 | 40 | 533 | 10 | 133 | 6 | 6 | 6 | 0 | 0 | 0 | 1 | 6 | 7 |
| | 533 | 1067 | 133 | 267 | 8 | 10 | 10 | 0 | 2 | 2 | 2 | 7 | 9 |
| | 1067 | 1600 | 267 | 400 | 12 | 12 | 14 | 3 | 3 | 5 | 2 | 8 | 10 |
| 4:1 | 40 | 533 | 5 | 67 | 3 | 3 | 3 | 0 | 0 | 0 | 1 | 3 | 4 |
| | 533 | 1067 | 67 | 133 | 4 | 5 | 5 | 0 | 1 | 1 | 1 | 4 | 5 |
| | 1067 | 1600 | 133 | 200 | 6 | 6 | 7 | 2 | 2 | 3 | 1 | 4 | 5 |

NOTE 1 tWCKENL_RD = RL + 1 - tWCKPRE_total_RD

NOTE 2 tWCKPRE_total_RD = tWCKPRE_toggle_RD + tWCKPRE_Static

NOTE 3 The LPDDR5 SDRAM device should not be operated at a frequency above the upper frequency limit, or below the lower frequency limit, shown for each RL value.

NOTE 4 Some operating features can affect Read Latency:

| Feature | Description |
|---|---|
| 1 | Byte Mode |
| 2 | Read DBI and/or Read Data Copy |

NOTE 5 RL Set 0 applies when no features are enabled.
RL Set 1 applies when one feature is enabled (1 or 2).
RL Set 2 applies when two features are enabled.

**Table 184 — WCK2CK Sync AC Parameters for Read operation**

DVFSC disabled (MR19 OP[1:0] = $00_B$), Read Link ECC enable (MR22 OP[7:6]=$01_B$)

| WCK:CK ratio | Data Rate Range [Mbps] | | CK Frequency Range [MHz] | | WCK2CK Sync READ AC Parameters [nCK] | | | | | | |
|---|---|---|---|---|---|---|---|---|---|---|---|
| | | | | | READ Latency | | tWCKENL_RD | | tWCKPRE_static | tWCKPRE_toggle_RD | tWCKPRE_total_RD |
| | Lower Limit (>) | Upper Limit (≤) | Lower Limit (>) | Upper Limit (≤) | Set 0 | Set 1 | Set 0 | Set 1 | | | |
| 4:1 | 3200 | 3733 | 400 | 467 | 12 | 13 | 5 | 6 | 3 | 5 | 8 |
| | 3733 | 4267 | 467 | 533 | 13 | 14 | 5 | 6 | 3 | 6 | 9 |
| | 4267 | 4800 | 533 | 600 | 15 | 16 | 7 | 8 | 3 | 6 | 9 |
| | 4800 | 5500 | 600 | 688 | 17 | 18 | 8 | 9 | 4 | 6 | 10 |
| | 5500 | 6000 | 688 | 750 | 18 | 20 | 8 | 10 | 4 | 7 | 11 |
| | 6000 | 6400 | 750 | 800 | 19 | 21 | 9 | 11 | 4 | 7 | 11 |

NOTE 1 tWCKENL_RD = RL + 1 - tWCKPRE_total_RD

NOTE 2 tWCKPRE_total_RD = tWCKPRE_toggle_RD + tWCKPRE_Static

NOTE 3 The LPDDR5 SDRAM device should not be operated at a frequency above the upper frequency limit, or below the lower frequency limit, shown for each RL, or nRBTP value.

NOTE 4 RL Set 1 applies when the device is byte-mode.

### 7.2.1.5 WCK2CK Sync operation with CAS(WS_FAST=1)

The WCK2CK Sync operation is performed with minimum latency, tWCKENL_FAST, when a CAS command with WS_FAST=1 is issued to an LPDDR5 SDRAM. By this way, the LPDDR5 SDRAM controller can put LPDDR5 SDRAM into WCK2CK Synchronized state as early as possible. CAS(WS_FS=1) is used as a standalone command unlike CAS(WS_RD/WR) and can be issued to not only one rank but also multi-ranks simultaneously. tWCKPRE_toggle_FS can be varied by the command timing gap between CAS(WS_FS=1) and following READ or WRITE commands, whereas tWCKPRE_toggle_WR and tWCKPRE_toggle_RD are exact fixed number in nCK unit.
After CAS (WS_FSAT=1) command is issued, not only READ/ WRITE commands but also other commands like Active and Refresh can be issued. Refer to 8.1.2, CAS command timing constraints.

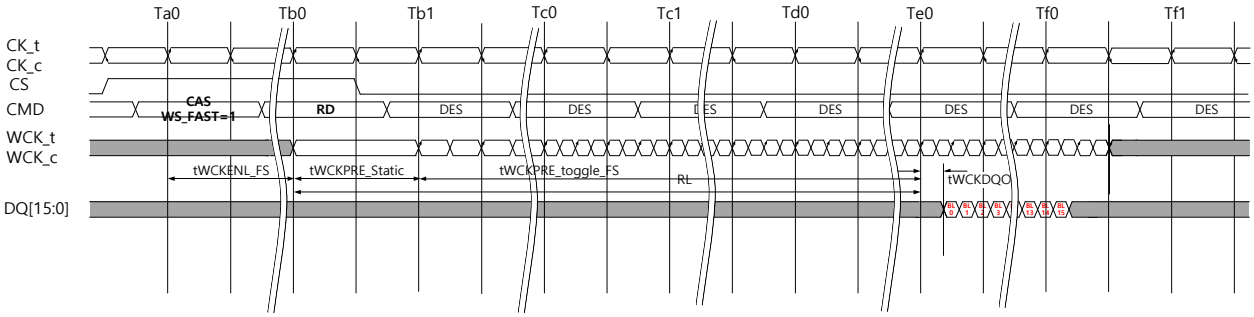


**Figure 67 — Minimum latency WCK2CK Sync operation for CAS(WS_FAST=1)**

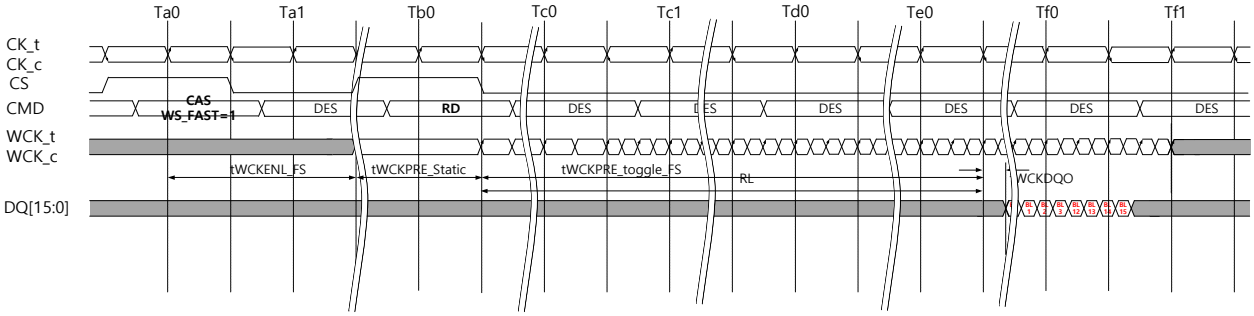


**Figure 68 — WCK2CK sync operation for Read Operation with CAS(WS_FAST=1) with command gap**

### 7.2.1.5 WCK2CK Sync operation with CAS(WS_FAST=1) (Cont'd)

**Table 185 — WCK2CK Sync AC Parameters for CAS(WS_FAST)**

| WCK:CK Ratio | Data Rate [Mbps] | | CK Frequency [MHz] | | MR2 OP[3:0] setting | tWCKENL_FS [nCK] | tWCKPRE_Static [nCK] |
|---|---|---|---|---|---|---|---|
| | Lower Limit(>) | Upper Limit(≤) | Lower Limit(>) | Upper Limit(≤) | | | |
| 2:1 | 40 | 533 | 10 | 133 | $0000_B$ | 0 | 1 |
| | 533 | 1067 | 133 | 267 | $0001_B$ | 0 | 2 |
| | 1067 | 1600 | 267 | 400 | $0010_B$ | 1 | 2 |
| | 1600 | 2133 | 400 | 533 | $0011_B$ | 1 | 3 |
| | 2133 | 2750 | 533 | 688 | $0100_B$ | 1 | 4 |
| | 2750 | 3200 | 688 | 800 | $0101_B$ | 2 | 4 |
| 4:1 | 40 | 533 | 5 | 67 | $0000_B$ | 0 | 1 |
| | 533 | 1067 | 67 | 133 | $0001_B$ | 0 | 1 |
| | 1067 | 1600 | 133 | 200 | $0010_B$ | 1 | 1 |
| | 1600 | 2133 | 200 | 267 | $0011_B$ | 1 | 2 |
| | 2133 | 2750 | 267 | 344 | $0100_B$ | 1 | 2 |
| | 2750 | 3200 | 344 | 400 | $0101_B$ | 1 | 2 |
| | 3200 | 3733 | 400 | 467 | $0110_B$ | 1 | 3 |
| | 3733 | 4267 | 467 | 533 | $0111_B$ | 1 | 3 |
| | 4267 | 4800 | 533 | 600 | $1000_B$ | 2 | 3 |
| | 4800 | 5500 | 600 | 688 | $1001_B$ | 2 | 4 |
| | 5500 | 6000 | 688 | 750 | $1010_B$ | 2 | 4 |
| | 6000 | 6400 | 750 | 800 | $1011_B$ | 2 | 4 |

### 7.2.1.6 Rank to rank WCK2CK Sync operation

There are two different methods to control WCK2CK Sync state of two rank LPDDR5 SDRAM. The first method is to start WCK2CK Sync process of rank 1 after completing DQ data burst of rank 0 as shown in Figure 69. In this case, tWCKPST of rank 0 and tWCKPRE of rank 1 should be guaranteed for right RDQS post-amble of read operation of rank 0 and for right WCK2CK Synchronization operation of rank 1, respectively.

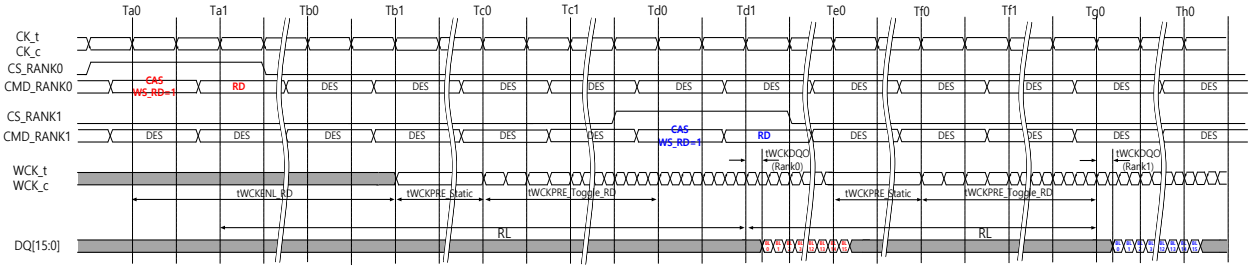


**Figure 69 — Minimum gap rank to rank read operation with WCK2CK Sync after completing DQ burst in one rank**

The second method is to start WCK2CK Sync process of both ranks simultaneously as shown in Figure 70. When both ranks are not in WCK2CK synchronized state and DQ bursts between two ranks are closed, a simultaneous CAS command with WS_FAST=1 is the recommended way, considering efficient DQ bus utilization.

If the following DQ bursts of one rank are far from the preceding ones of the other rank, extra power consumption due to WCK toggle should be considered. After synchronizing both ranks, if rank 0 is not used, CAS (WCK buffer off) command can be issued to rank 0 to save power.

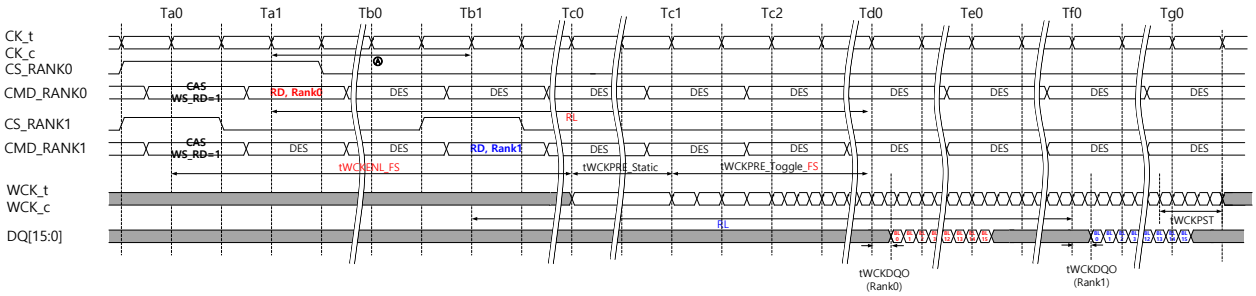


**Figure 70 — Simultaneous WCK2CK Sync process for multi-ranks (especially two ranks)**

### 7.2.2 **WCK2CK SYNC Off Timing Definition**

The next commands which require WCK2CK SYNC can be issued up to the maximum timing defined as the following tables. Duplicated CAS(WS_WR/RD) command issuing is inhibited during this period. Once the maximum timing is exceeded, CAS(WS_FS or WS_WR/RD) command is required to issue before issuing the commands which require WCK2CK SYNC. Continuous WCK input should maintain at least to meet the following min WCK toggling cycles in a WCK domain.

- WL/RL + BL/n_max + RD(tWCKPST/tCK) (BG mode)
- WL/RL + BL/n_max + (tWCKPST – 0.5*tWCK) (8B/16B mode)

**Table 1 WCK2CK SYNC Off Timing Definition (16B Mode) for WR16/32, RD16/32 and MWR**

| Current Command | Next Command | Bank Relationship | Command Timing Constraints w/o a new WCK2CK SYNC Start | | Note |
|---|---|---|---|---|---|
| | | | Min | Max | |
| WRITE (WR16, WR32) | WRITE (WR16, WR32) | Any Banks | BL/n | WL + BL/n_max + RD(tWCKPST/tCK) | 2 |
| | MASK WRITE | Same Bank | 4*BL/n (WR16)<br>2.5*BL/n (WR32) | WL + BL/n_max + RD(tWCKPST/tCK) | 1, 2, 3 |
| | | Different Banks | BL/n | WL + BL/n_max + RD(tWCKPST/tCK) | 2 |
| | READ (RD16, RD32) | Any Banks | WL + BL/n + RU(tWTR/tCK) | - | 1, 2 |
| MASK WRITE | WRITE (WR16, WR32) | Any Banks | BL/n | WL + BL/n_max + RD(tWCKPST/tCK) | 2 |
| | MASK WRITE | Same Bank | 4*BL/n | WL + BL/n_max + RD(tWCKPST/tCK) | 1, 2, 3 |
| | | Different Banks | BL/n | WL + BL/n_max + RD(tWCKPST/tCK) | 2 |
| | READ (RD16, RD32) | Any Banks | WL + BL/n + RU(tWTR/tCK) | - | 1, 2 |
| READ (RD16, RD32) | WRITE (WR16, WR32) | Any Banks | RL + BL/n + RU(tWCKDQO(max) /tCK) - WL | RL + BL/n_max + RD(tWCKPST/tCK) | 2 |
| | MASK WRITE | Any Banks | RL + BL/n + RU(tWCKDQO(max) /tCK) - WL | RL + BL/n_max + RD(tWCKPST/tCK) | 2 |
| | READ (RD16, RD32) | Any Banks | BL/n | RL + BL/n_max + RD(tWCKPST/tCK) | 2 |

Note 1. Next command shall be issued with a new WCK2CK SYNC start (CAS-WS_FS or CAS-WS_WR/RD).
Note 2. WCK2CK SYNC shall be initiated before issuing the current command.
Note 3. If Min timing is larger than Max timing depending WL, a new WCK2CK SYNC start (CAS-WS_FS/WS_WR) is required before issuing a next command.

**Table 2 WCK2CK SYNC Off Timing Definition (BG Mode) for WR16/32, RD16/32 and MWR**

| Current Command | Next Command | Bank Relationship | Command Timing Constraints w/o a new WCK2CK SYNC Start | | Note |
|---|---|---|---|---|---|
| | | | Min | Max | |
| WRITE (WR16, WR32) | WRITE (WR16, WR32) | Any Banks | BL/n | WL + BL/n_max + RD(tWCKPST/tCK) | 2 |
| | MASK WRITE | Same Bank in Same BG | 4*BL/n_max (WR16) 2.5*BL/n_max (WR32) | WL + BL/n_max + RD(tWCKPST/tCK) | 1, 2, 3 |
| | | Different Banks in Same BG | BL/n_max | WL + BL/n_max + RD(tWCKPST/tCK) | 1, 2 |
| | | Different Banks in Different BG | BL/n | WL + BL/n_max + RD(tWCKPST/tCK) | 2 |
| | READ (RD16, RD32) | Same or Different Banks in Same BG | WL + BL/n_max + RU(tWTR_L/tCK) | - | 1, 2 |
| | | Different Banks in Different BG | WL + BL/n_min + RU(tWTR_S/tCK) | - | 1, 2 |
| MASK WRITE | WRITE (WR16, WR32) | Any Banks | BL/n | WL + BL/n_max + RD(tWCKPST/tCK) | 2 |
| | MASK WRITE | Same Banks in Same BG | 4*BL/n_max | WL + BL/n_max + RD(tWCKPST/tCK) | 1, 2, 3 |
| | | Different Banks in Same BG | BL/n_max | WL + BL/n_max + RD(tWCKPST/tCK) | 2 |
| | | Different Banks in Different BG | BL/n | WL + BL/n_max + RD(tWCKPST/tCK) | 2 |
| | READ (RD16, RD32) | Same or Different Banks in Same BG | WL + BL/n_max + RU(tWTR_L/tCK) | - | 1, 2 |
| | | Different Banks in Different BG | WL + BL/n_min + RU(tWTR_S/tCK) | - | 1, 2 |
| READ (RD16, RD32) | WRITE (WR16, WR32) | Same or Different Banks in Same BG | RL + BL/n_max + RU(tWCKDQO(max) /tCK) - WL | RL + BL/n_max + RD(tWCKPST/tCK) | 2 |
| | | Different Banks in Different BG | RL + BL/n_min + RU(tWCKDQO(max) /tCK) - WL | | 2 |
| | MASK WRITE | Same or Different Banks in Same BG | RL + BL/n_max + RU(tWCKDQO(max) /tCK) - WL | RL + BL/n_max + RD(tWCKPST/tCK) | 2 |
| | | Different Banks in Different BG | RL + BL/n_min + RU(tWCKDQO(max) /tCK) - WL | | 2 |
| | READ (RD16, RD32) | Any Banks | BL/n | RL + BL/n_max + RD(tWCKPST/tCK) | 2 |

Note 1. Next command shall be issued with a new WCK2CK SYNC start (CAS-WS_FS or CAS-WS_WR/RD).
Note 2. WCK2CK SYNC shall be initiated before issuing the current command.
Note 3. If Min timing is larger than Max timing depending WL, a new WCK2CK SYNC start (CAS-WS_FS/WS_WR) is required before issuing a next command.

**Table 3 WCK2CK SYNC Off Timing Definition (8B Mode) for WR16/32, RD16/32 and MWR**

| Current Command | Next Command | Bank Relationship | Command Timing Constraints w/o a new WCK2CK SYNC start | | Note |
|---|---|---|---|---|---|
| | | | Min | Max | |
| WRITE | WRITE | Any Banks | BL/n | WL + BL/n_max + RD(tWCKPST/tCK) | 2 |
| | MASK WRITE | Same Bank | 4*BL/n | WL + BL/n_max + RD(tWCKPST/tCK) | 1, 2, 3 |
| | | Different Banks | BL/n | WL + BL/n_max + RD(tWCKPST/tCK) | 2 |
| | READ | Any Banks | WL + BL/n + RU(tWTR/tCK) | - | 1, 2 |
| MASK WRITE | WRITE | Any Banks | BL/n | WL + BL/n_max + RD(tWCKPST/tCK) | 2 |
| | MASK WRITE | Same Bank | 4*BL/n | WL + BL/n_max + RD(tWCKPST/tCK) | 1, 2, 3 |
| | | Different Banks | BL/n | WL + BL/n_max + RD(tWCKPST/tCK) | 2 |
| | READ | Any Banks | WL + BL/n + RU(tWTR/tCK) | - | 1, 2 |
| READ | WRITE | Any Banks | RL + BL/n + RU(tWCKDQO(max) /tCK) - WL | RL + BL/n_max + RD(tWCKPST/tCK) | 2 |
| | MASK WRITE | Any Banks | RL + BL/n + RU(tWCKDQO(max) /tCK) - WL | RL + BL/n_max + RD(tWCKPST/tCK) | 2 |
| | READ | Any Banks | BL/n | RL + BL/n_max + RD(tWCKPST/tCK) | 2 |

Note 1. Next command shall be issued with a new WCK2CK SYNC start (CAS-WS_FS or CAS-WS_WR/RD).
Note 2. WCK2CK SYNC shall be initiated before issuing the current command.
Note 3. If Min timing is larger than Max timing depending WL, a new WCK2CK SYNC start (CAS-WS_FS/WS_WR) is required before issuing a next command.

**Table 4 WCK2CK SYNC Off Timing Definition for MRR**

| Current Command | Next Command | Command Timing Constraints w/o a new WCK2CK SYNC start | | Note |
|---|---|---|---|---|
| | | Min | Max | |
| MRR | MRR | tMRR | RL + BL/n_max + RD(tWCKPST/tCK) | 2, 4 |
| | READ (RD16, RD32 with or w/o AP) | RL + BL/n_max +RD(tWCKPST/tCK) + 2 | - | 1, 2, 4 |
| | WRITE (WR16, WR32, MWR with or w/o AP) | RL + BL/n_max + RU(tWCKDQO(max)/tCK) – WL +2 | RL + BL/n_max + RD(tWCKPST/tCK) | 2, 3, 4 |
| READ (RD16, RD32 with or w/o AP) | MRR | RL + BL/n_max + RD(tWCKPST/tCK) + 2 | - | 1, 2 |
| WRITE (WR16, WR32, MWR with or w/o AP) | MRR | WL + BL/n_max + RU(tWTR/tCK) | - | 1, 2 |

Note 1. Next command shall be issued with a new WCK2CK SYNC start (CAS-WS_FS or CAS-WS_RD).
Note 2. WCK2CK SYNC shall be initiated before issuing the current command.
Note 3. In case of DQ ODT enabled, MRR-WRITE (min) should be “RL + BL/n_max + RU(tWCKDQO(max)/tCK) – ODTLon – RD(tODTon(min)/tCK) +2”.
Note 4. Actual BL/n_max value is as follows;
CKR=2:1, 16B mode=4nCK, 8B mode=8nCK,
CKR=4:1, 16B mode=2nCK, BG mode=4nCK, 8B mode=4nCK

**Table 5 WCK2CK SYNC Off Timing Definition for Training Commands**

| Current Command | Next Command | Command Timing Constraints w/o a new WCK2CK SYNC start | | Note |
|---|---|---|---|---|
| | | Min | Max | |
| WRITE FIFO (WFF) | WRITE FIFO (WFF) | 2nCK (CKR=4:1)<br>4nCK (CKR=2:1) | WL + BL/n_max + RD(tWCKPST/tCK) | 2, 3 |
| | READ FIFO (RFF) | WL + BL/n_max + RU(tWTR/tCK) | - | 1, 2, 3 |
| | WRITE (WR16, WR32, MWR with or w/o AP) | Not Allowed | | 2 |
| | READ (RD16, RD32 with or w/o AP), MRR | Not Allowed | | 2 |
| | READ DQ Calibration (RDC) | Not Allowed | | 2 |
| READ FIFO (RFF) | WRITE FIFO (WFF) | tRTW | RL + BL/n_max + RD(tWCKPST/tCK) | 2, 3 |
| | READ FIFO (RFF) | 2nCK (CKR=4:1)<br>4nCK (CKR=2:1) | RL + BL/n_max + RD(tWCKPST/tCK) | 2, 3 |
| | WRITE (WR16, WR32, MWR with or w/o AP) | tRTRRD | - | 1, 2 |
| | READ (RD16, RD32 with or w/o AP), MRR | tRTRRD | - | 1, 2 |
| | READ DQ Calibration (RDC) | tRTRRD | - | 1, 2 |
| READ DQ Calibration (RDC) | WRITE FIFO (WFF) | tRTRRD | - | 1, 2 |
| | READ FIFO (RFF) | Not Allowed | | 2 |
| | WRITE (WR16, WR32, MWR with or w/o AP) | tRTRRD | - | 1, 2 |
| | READ (RD16, RD32 with or w/o AP), MRR | tRTRRD | - | 1, 2 |
| | READ DQ Calibration (RDC) | 2nCK (CKR=4:1)<br>4nCK (CKR=2:1) | RL + BL/n_max + RD(tWCKPST/tCK) | 2, 3 |
| WRITE (WR16, WR32, MWR with or w/o AP) | WRITE FIFO (WFF) | tWRWTR | - | 1, 2 |
| | READ FIFO (RFF) | Not Allowed | | 2 |
| | READ DQ Calibration (RDC) | WL + BL/n_max + RU(tWTR/tCK) | - | 1, 2 |
| READ (RD16, RD32 with or w/o AP), MRR | WRITE FIFO (WFF) | tRTRRD | - | 1, 2 |
| | READ FIFO (RFF) | Not Allowed | | 2 |
| | READ DQ Calibration (RDC) | tRTRRD | - | 1, 2 |

Note 1. Next command shall be issued with a new WCK2CK SYNC start (CAS-WS_FS or CAS-WS_WR/RD).
Note 2. WCK2CK SYNC shall be initiated before issuing the current command.
Note 3. Actual BL/n_max value is as follows;
CKR=2:1, 16B mode=4nCK, 8B mode=8nCK,
CKR=4:1, 16B mode=2nCK, BG mode=4nCK, 8B mode=4nCK

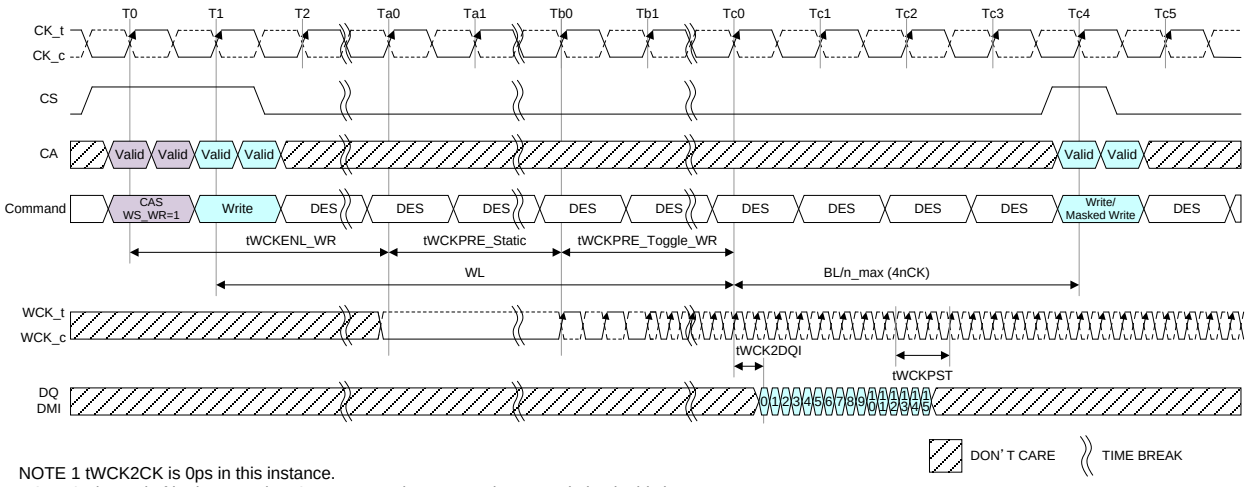


NOTE 1 tWCK2CK is 0ps in this instance.
NOTE 2 The end of both WL and tWCKPRE_Toggle_WR are the same timing in this instance.
NOTE 3 Write/Masked Write command can be issued until Tc4. (See command constraints tables for details.)
NOTE 4 CAS Sync command is inhibited until Tc4.
NOTE 5 CAS Sync command can be issued after Tc5 (Tc5 is included)
NOTE 6 tWCKPST=2.5nWCK, RD(tWCKPST/tCK)=0

**Figure 1 Write sync off timing BG Mode, CKR (WCK vs. CK) = 4:1, BL=16**

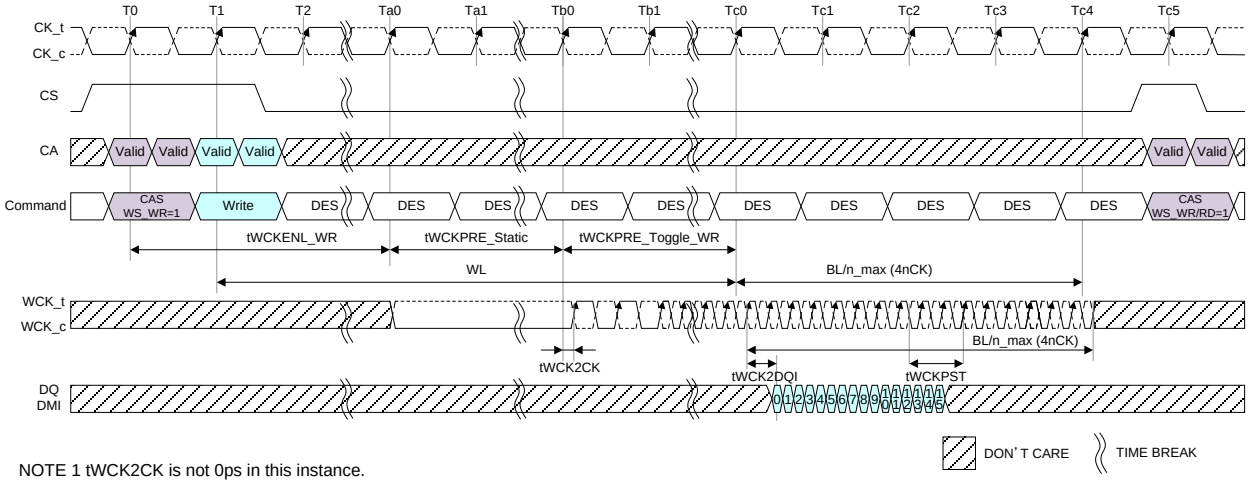


NOTE 1 tWCK2CK is not 0ps in this instance.
NOTE 2 The end of both WL and tWCKPRE_Toggle_WR are the same timing in this instance.
NOTE 3 Write/Masked Write command can be issued until Tc4. (See command constraints tables for details.)
NOTE 4 CAS Sync command is inhibited until Tc4.
NOTE 5 CAS Sync command can be issued after Tc5 (Tc5 is included)
NOTE 6 tWCKPST=2.5nWCK, RD(tWCKPST/tCK) = 0

**Figure 2 Write sync off timing (WCK2CK Sync is expired), BG Mode, CKR(WCK vs. CK) = 4:1, BL=16**

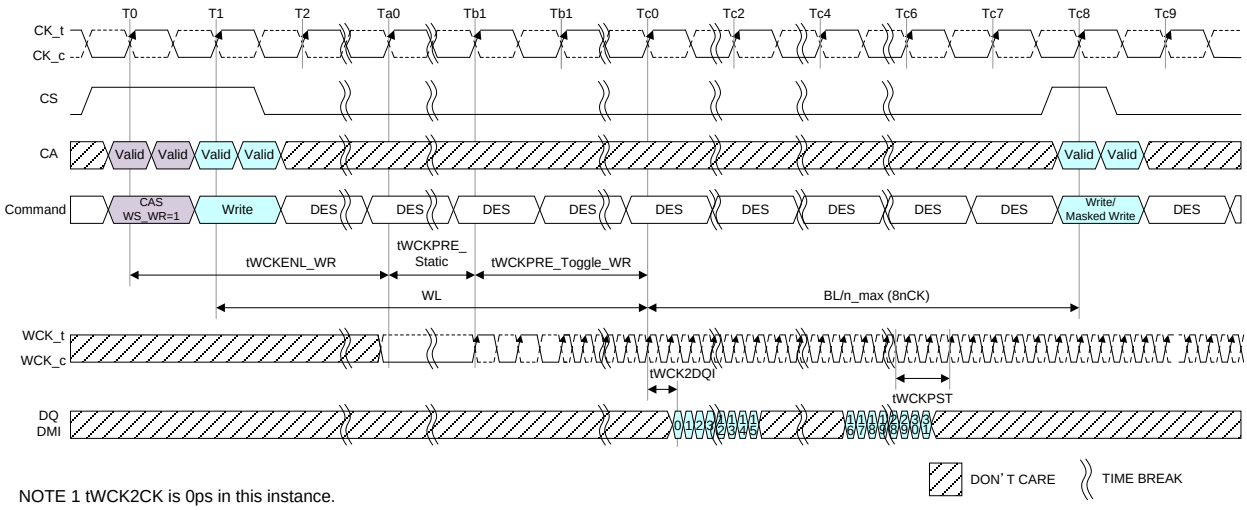


NOTE 1 tWCK2CK is 0ps in this instance.
NOTE 2 The end of both WL and tWCKPRE_Toggle_WR are the same timing in this instance.
NOTE 3 Write/Masked Write command can be issued until Tc8. (See command constraints tables for details.)
NOTE 4 CAS Sync command is inhibited until Tc8.
NOTE 5 CAS Sync command can be issued after Tc9 (Tc9 is included)
NOTE 6 tWCKPST=2.5nWCK, RD(tWCKPST/tCK)=0

**Figure 3 Write sync off timing BG Mode : CKR (WCK vs. CK) = 4:1, BL=32**

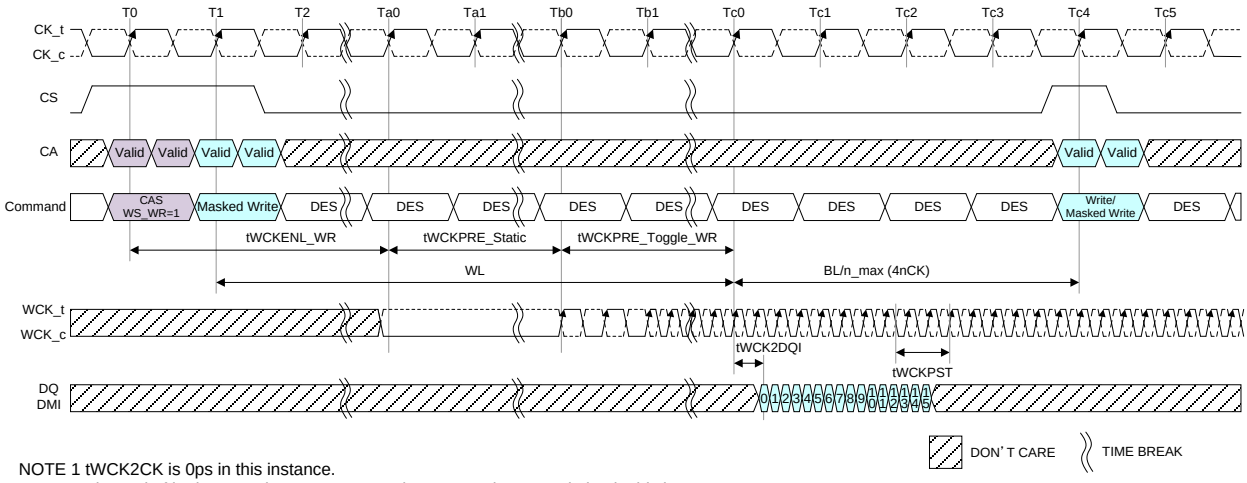


NOTE 1 tWCK2CK is 0ps in this instance.
NOTE 2 The end of both WL and tWCKPRE_Toggle_WR are the same timing in this instance.
NOTE 3 Write/Masked Write command can be issued until Tc4. (See command constraints tables for details.)
NOTE 4 CAS Sync command is inhibited until Tc4.
NOTE 5 CAS Sync command can be issued after Tc5 (Tc5 is included)
NOTE 6 tWCKPST=2.5nWCK, RD(tWCKPST/tCK)=0

**Figure 4 Masked Write sync off timing BG Mode : CKR (WCK vs. CK) = 4:1, BL=16**

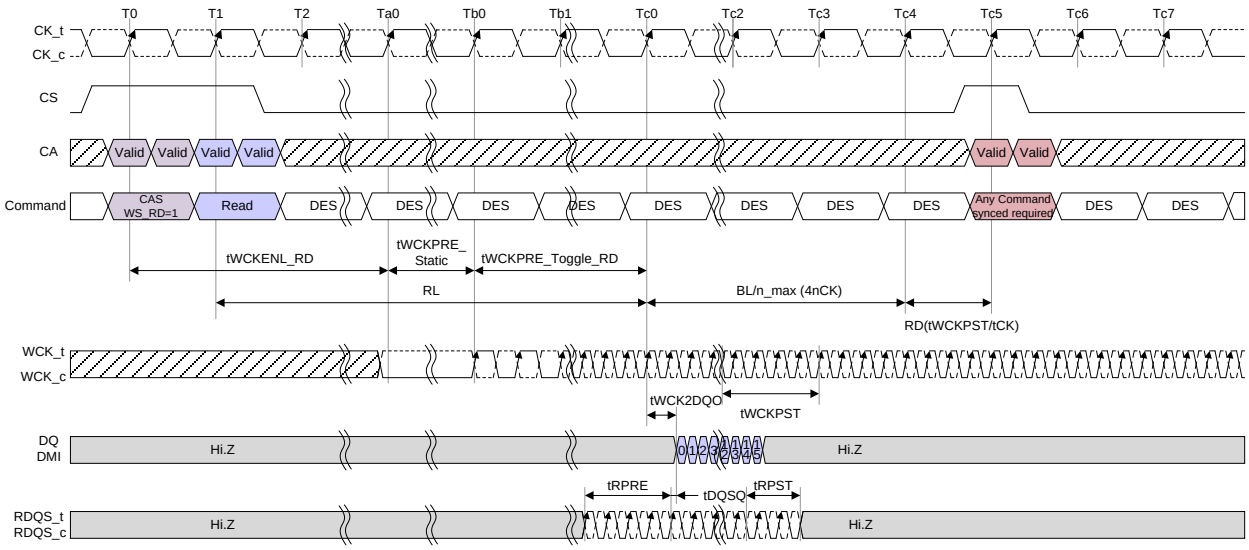


NOTE 1 tWCK2CK is 0ps in this instance.
NOTE 2 The end of both RL and tWCKPRE_Toggle_RD are the same timing in this instance.
NOTE 3 Any command synced required can be issued until Tc5. (See command constraints tables for details.)
NOTE 4 CAS Sync command is inhibited until Tc5.
NOTE 5 CAS Sync command can be issued after Tc6 (Tc6 is included)
NOTE 6 tWCKPST=4.5nWCK, RD(tWCKPST/tCK)=1

**Figure 5 Read sync off timing BG Mode : CKR (WCK vs. CK) = 4:1, BL=16, tRPST=2.5nWCK**

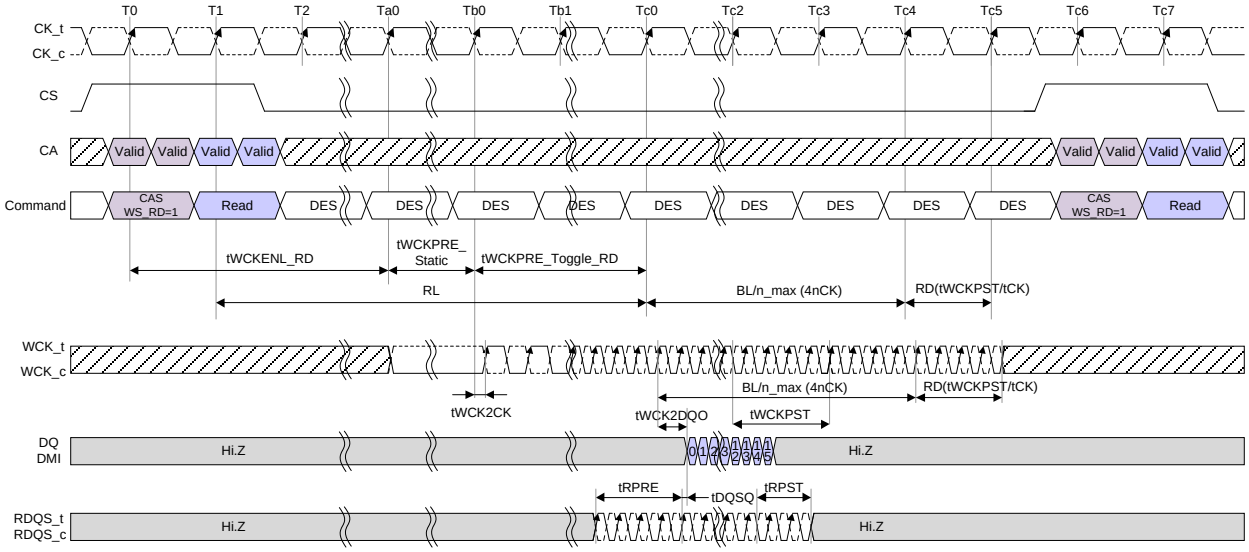


NOTE 1 tWCK2CK is not 0ps in this instance.
NOTE 2 The end of both RL and tWCKPRE_Toggle_RD are the same timing in this instance.
NOTE 3 Any command synced required can be issued until Tc5. (See command constraints tables for details.)
NOTE 4 CAS Sync command is inhibited until Tc5.
NOTE 5 CAS Sync command can be issued after Tc6 (Tc6 is included)
NOTE 6 tWCKPST=4.5nWCK, RD(tWCKPST/tCK)=1

**Figure 6 Read sync off timing (WCK2CK Sync is expired) BG Mode, CKR= 4:1, BL=16, tRPST=2.5nWCK**

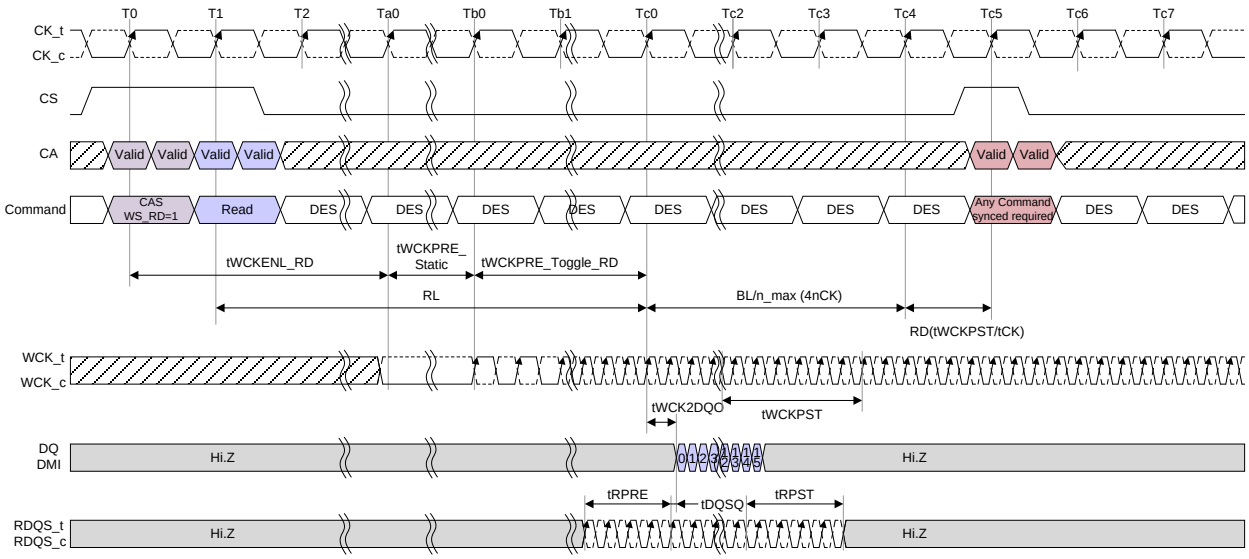


NOTE 1 tWCK2CK is 0ps in this instance.
NOTE 2 The end of both RL and tWCKPRE_Toggle_RD are the same timing in this instance.
NOTE 3 Any command synced required can be issued until Tc5. (See command constraints tables for details.)
NOTE 4 CAS Sync command is inhibited until Tc5.
NOTE 5 CAS Sync command can be issued after Tc6 (Tc6 is included)
NOTE 6 tWCKPST=6.5nWCK, RD(tWCKPST/tCK)=1

**Figure 7 Read sync off timing BG Mode : CKR (WCK vs. CK) = 4:1, BL=16, tRPST=4.5nWCK**

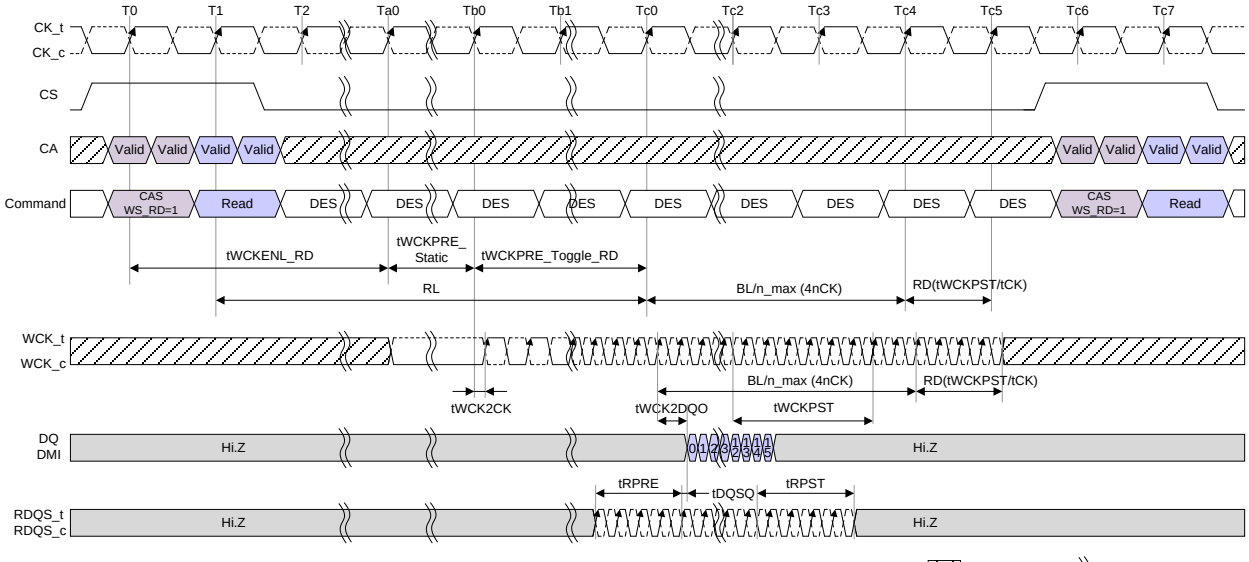


NOTE 1 tWCK2CK is 0ps in this instance.
NOTE 2 The end of both RL and tWCKPRE_Toggle_RD are the same timing in this instance.
NOTE 3 Any command synced required can be issued until Tc5. (See command constraints tables for details.)
NOTE 4 CAS Sync command is inhibited until Tc5.
NOTE 5 CAS Sync command can be issued after Tc6 (Tc6 is included)
NOTE 6 tWCKPST=6.5nWCK, RD(tWCKPST/tCK) = 1

**Figure 8 Read sync off timing (WCK2CK Sync is expired) BG Mode, CKR= 4:1, BL=16, tRPST=4.5nWCK**

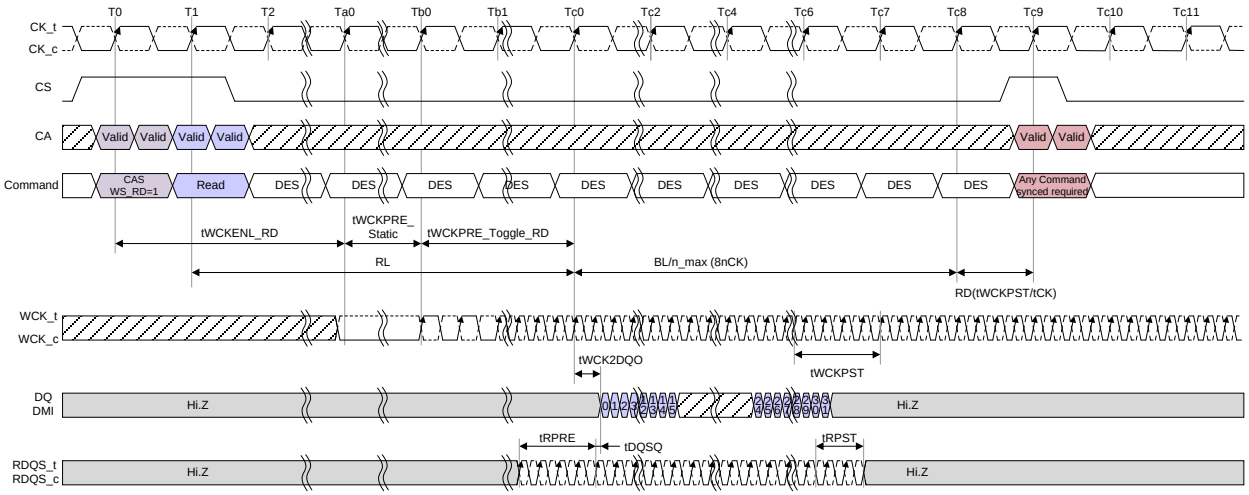


NOTE 1 tWCK2CK is 0ps in this instance.
NOTE 2 The end of both RL and tWCKPRE_Toggle_RD are the same timing in this instance.
NOTE 3 Any command synced required can be issued until Tc9. (See command constraints tables for details.)
NOTE 4 CAS Sync command is inhibited until Tc9.
NOTE 5 CAS Sync command can be issued after Tc10 (Tc10 is included)
NOTE 6 tWCKPST=4.5nWCK, RD(tWCKPST/tCK)=1

**Figure 9 Read sync off timing BG Mode : CKR (WCK vs. CK) = 4:1, BL=32, tRPST=2.5nWCK**

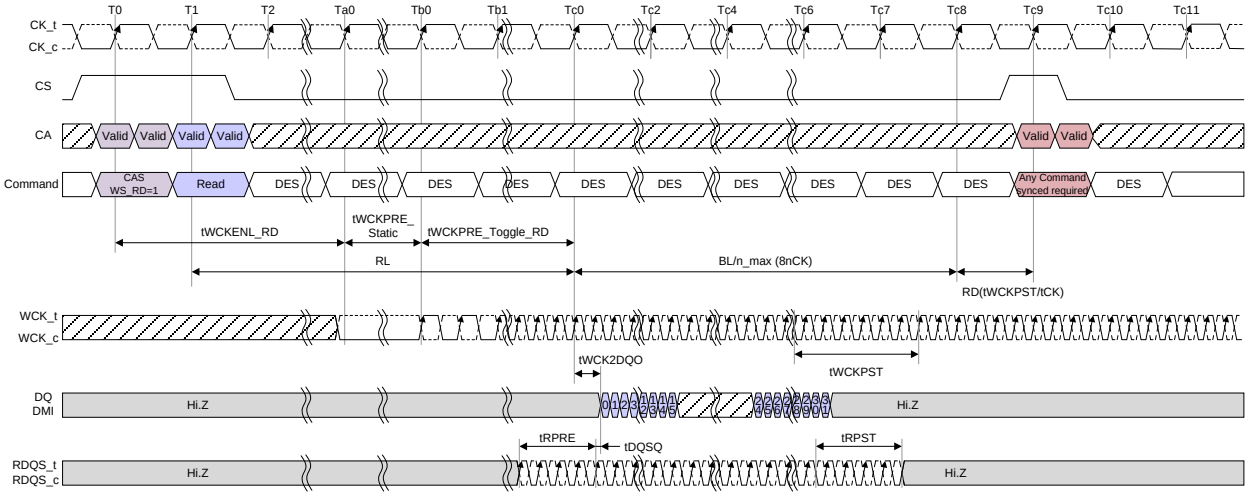


NOTE 1 tWCK2CK is 0ps in this instance.
NOTE 2 The end of both RL and tWCKPRE_Toggle_RD are the same timing in this instance.
NOTE 3 Any command synced required can be issued until Tc9. (See command constraints tables for details.)
NOTE 4 CAS Sync command is inhibited until Tc9.
NOTE 5 CAS Sync command can be issued after Tc10 (Tc10 is included)
NOTE 6 tWCKPST=6.5nWCK, RD(tWCKPST/tCK)=1

**Figure 10 Read sync off timing BG Mode : CKR (WCK vs. CK) = 4:1, BL=32, tRPST=4.5nWCK**

### 7.2.3 Write Clock Always on mode (WCK Always on mode)

An LPDDR5 SDRAM supports WCK Always on mode as an MRS option. WCK free running mode is enabled by setting MR18 OP[4] = $1_B$. When WCK free running mode is enabled, the WCK buffer in an LPDDR5 SDRAM is turned on with WCK2CK synchronization and keeps being turned on until SDRAM receives power down, self-refresh power-down or deep-sleep commands or reset. Therefore, the SDRAM controller must keep WCK toggling at its full rate after WCK2CK synchronization regardless of DQ operation. As the WCK2CK synchronization information is lost with power down entry, the SDRAM controller must perform a WCK2CK synchronization sequence after power down exit before DQ operation.

**Figure 71** illustrates WCK Always on mode with WCK2CK synchronization followed by a write command. In this timing diagram, SDRAM is initially in Bank Active state at T0. Therefore, the WCK buffer in SDRAM is off state, losing the WCK2CK synchronization information. Although, the MR18 OP[4]=$1_B$, the WCK buffer is not turned on until receiving a CAS command with WCK2CK-sync bit high (WS_WR, WS_RD or WS_FS). At T0, a CAS command with WS_WR=1 initiates WCK2CK synchronization process and turns on the WCK buffer in SDRAM. Once enabled, the WCK buffer keeps being on regardless of following commands until receiving the power-down entry command at Td2. At Td2, the power-down entry command turns off WCK buffer to reduce SDRAM power consumption. The timing diagram of WCK Always on mode starting with WCK2CK synchronization followed by a read command is shown in **Figure 72**.

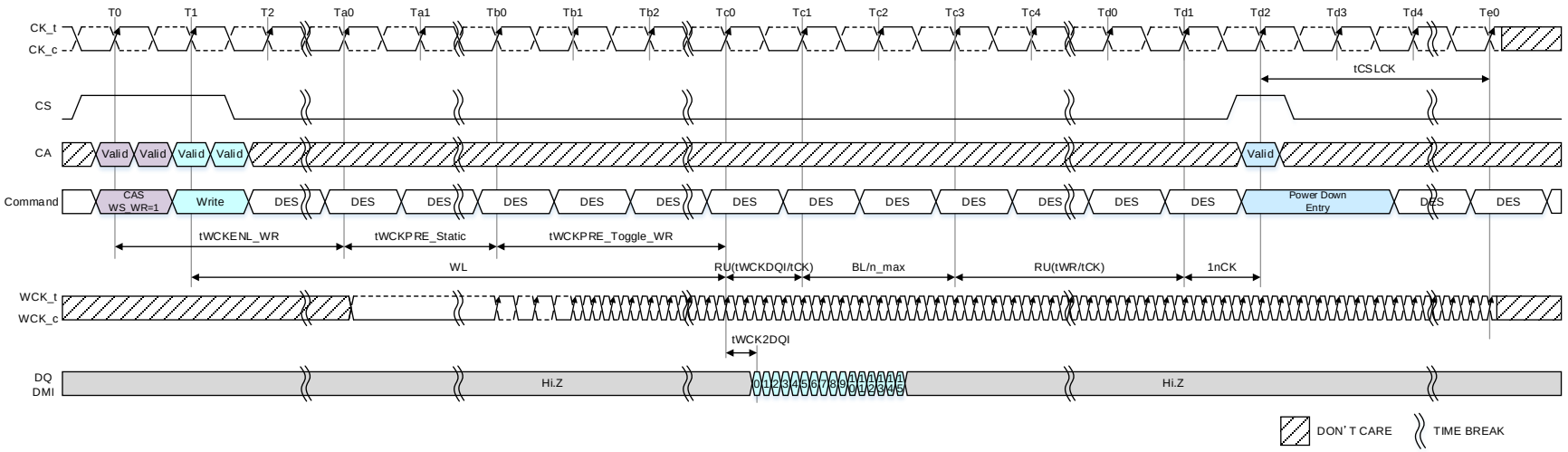


**Figure 71 - WCK Always on mode starting with WCK2CK-sync operation followed by a write command: 16B Mode**

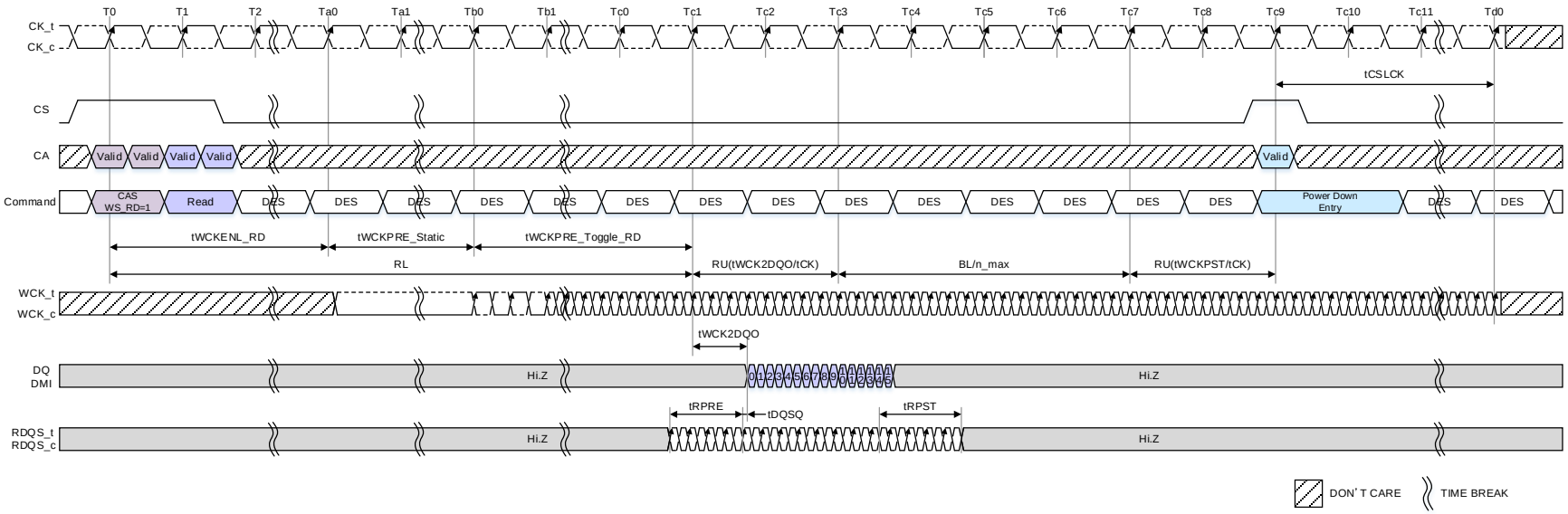


**Figure 72 - WCK Always on mode starting with WCK2CK-sync operation followed by a read command: BG Mode, NT-ODT Disable**

In WCK2CK sync state, SDRAM controller can turn off WCK buffer in SDRAM by sending a CAS(WS_OFF) command to save memory system power. This CAS(WS_OFF) command is shown in **Table 186**. SDRAM turns off WCK buffer asynchronously after receiving CAS(WS_OFF) command. After WCK buffer off, a new WCK2CK synchronization sequence is required. CAS(WS_OFF) command is allowed only when there is no on-going write, read or other DQ operation in the SDRAM. **Figure 73** and **Figure 74** illustrate CAS(WS_OFF) command based WCK buffer off following a write and read command, respectively. The required delay to issue CAS(WS_OFF) command after finishing DQ operation is tWCKOFF. The minimum value of tWCKOFF is BL/n_max + RD(tWCKPST/tCK) + 1 Refer to the CAS Command Timing Constraints table for CAS(WS_OFF) input timing details.

**Table 186 - CAS(WS_OFF) command**

| Command | CS | CA0 | CA1 | CA2 | CA3 | CA4 | CA5 | CA6 | CK |
|---|---|---|---|---|---|---|---|---|---|
| CAS | H | L | L | H | H | WS_WR=H | WS_RD=H | WS_FAST=H | R1 |
| | X | L | L | L | L | L | L | L | F1 |

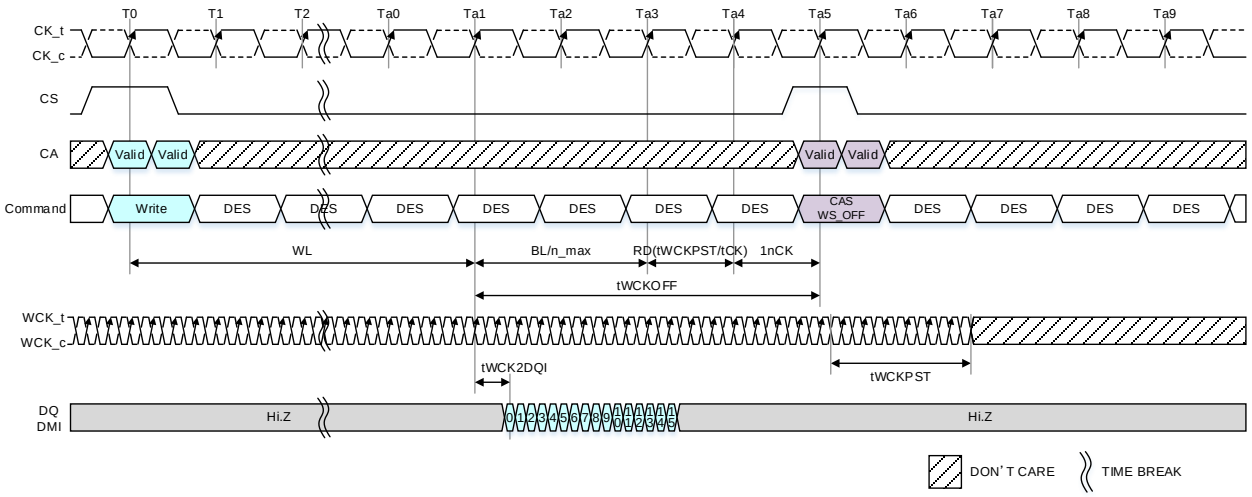


**Figure 73 – Write to CAS(WS_OFF) timing: 16B mode, CKR4:1, tWCKPST=6.5tWCK**

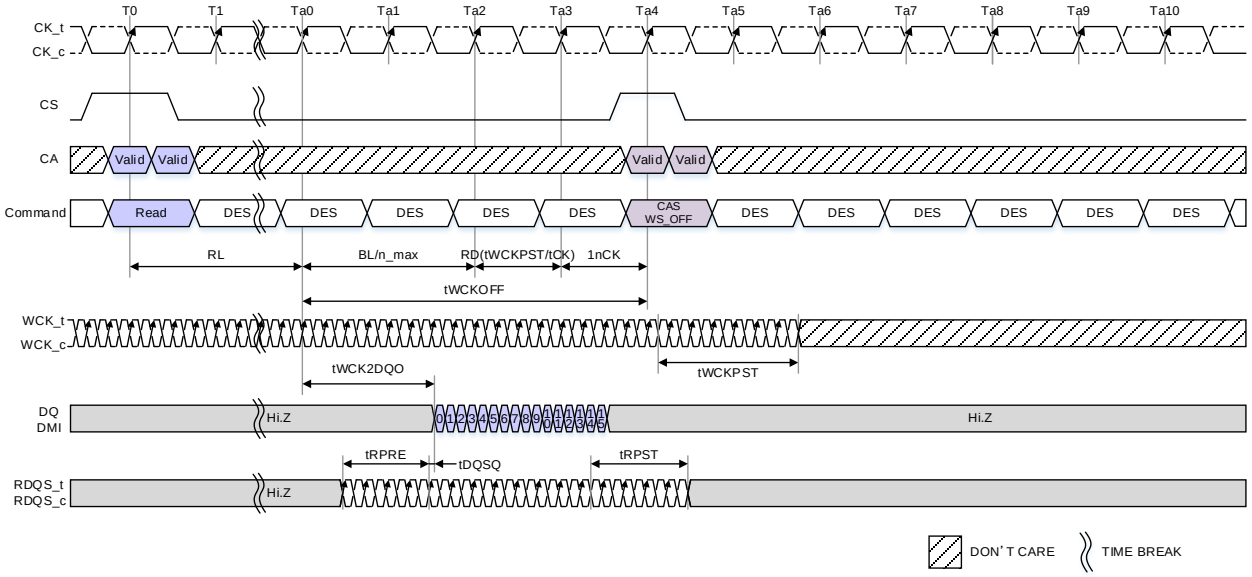


**Figure 74 – Read to CAS(WS_OFF) Timing: 16B mode, CKR4:1, tWCKPST=6.5tWCK**

## 7.3 Row operation

### 7.3.1 Active Command

The ACTIVATE command is composed of two commands, Activate-1 command and Activate-2. Activate-1 command is issued by holding CS HIGH, CA0 HIGH, CA1 HIGH, and CA2 HIGH at the rising edge of the clock and Activate-2 command issued by holding CS HIGH, CA0 HIGH, CA1 HIGH, and CA2 LOW at the rising edge of the clock. Activate-2 command shall be issued within 8 clock cycles (tAAD) after Activate-1 command was issued. Within tAAD period Only CAS, WRITE, MASKED WRITE, READ, MRR, PRECHARGE/Refresh (to a different bank) commands can be issued between ACTIVATE-1 and ACTIVATE-2 commands. It is an illegal operation if an Activate-2 command is not issued within tAAD of an Activate-1 command. During 8 bank mode, the bank addresses BA0, BA1, and BA2 are used to select desired bank. During BG mode, the bank/bank group addresses BA0, BA1, BG0, and BG1 are used to select desired bank. During 16 bank mode, the bank addresses BA0, BA1, BA2, and BA3 are used to select desired bank. Row addresses are used to determine which row to activate in the selected bank. The ACTIVATE command is required to be applied before any READ or WRITE/Masked Write operation can be executed. The SDRAM can accept a READ or WRITE/Masked Write command at tRCD after the ACTIVATE command is issued. After a bank has been activated, precharge command is issued to precharge bank or banks. The bank active and precharge times are defined as tRAS and tRP respectively. The minimum time interval between ACTIVATE commands to the same bank is determined by the RAS cycle time of the SDRAM (tRC). The minimum time interval between ACTIVATE commands to different banks is tRRD.

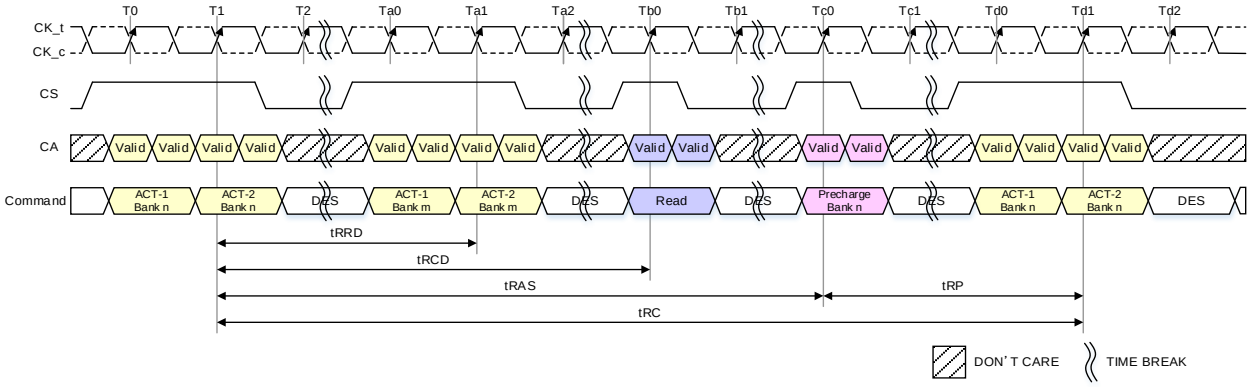


NOTE 1 DES commands are shown for ease of illustration; other commands may be valid at these times.

NOTE 2 A PRECHARGE command uses tRPab timing for all bank PRECHARGE and tRPpb timing for single-bank PRECHARGE. In this figure, tRP is used to denote either all bank PRECHARGE or a single-bank PRECHARGE.

**Figure 75 — Activate command for 8B/16B mode**

### 7.3.1 Active Command (Cont'd)

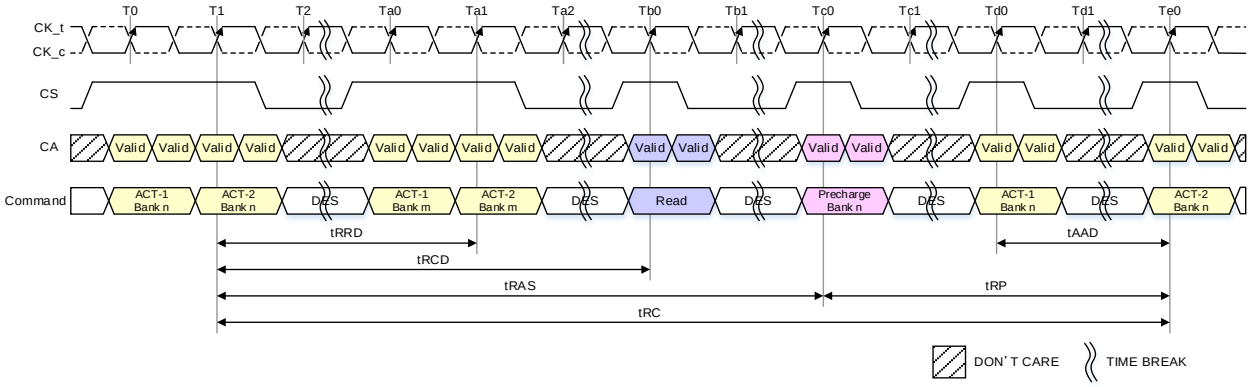


NOTE 1 DES commands are shown for ease of illustration; other commands may be valid at these times.

NOTE 2 A PRECHARGE command uses tRPab timing for all bank PRECHARGE and tRPpb timing for single-bank PRECHARGE. In this figure, tRP is used to denote either all bank PRECHARGE or a single-bank PRECHARGE.

**Figure 76 — Activate Command with Activate1 and Activate-2 spacing for 8B/16B mode**

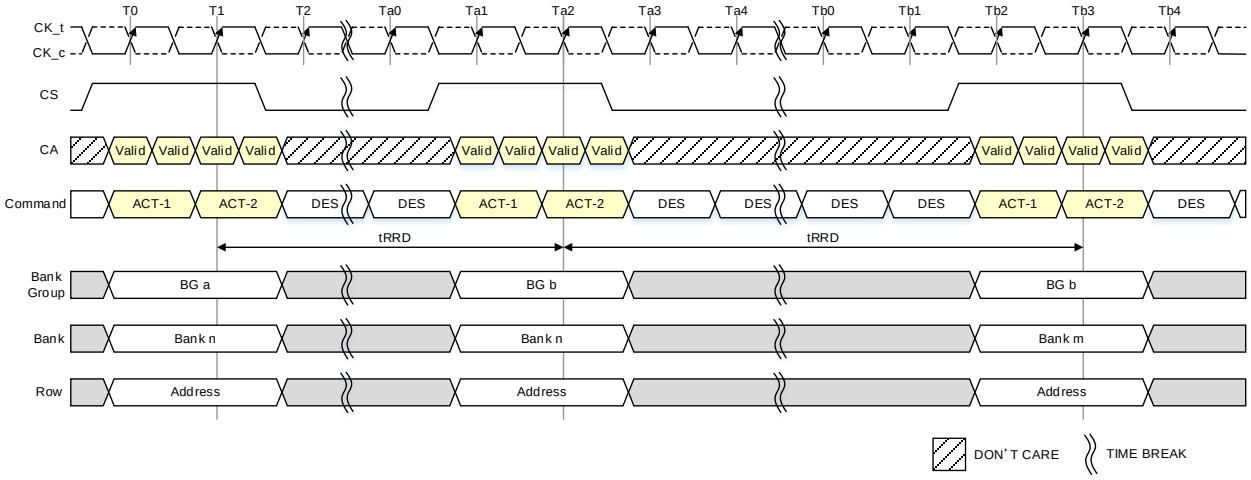


NOTE 1 DES commands are shown for ease of illustration; other commands may be valid at these times.

NOTE 2 tRRD: ACTIVATE to ACTIVATE Command period: Applies to consecutive ACTIVATE Commands to different Bank Group.

NOTE 3 tRRD: ACTIVATE to ACTIVATE Command period: Applies to consecutive ACTIVATE Commands to the different Banks of the same Bank Group, too.

**Figure 77 — Activate command for BG mode**

### 7.3.1.1 8-Bank mode SDRAM Operation

Certain restrictions on operation of the 8-banks LPDDR5 SDRAM are required to be observed the number of sequential Bank Activation that can be issued.

**8 bank SDRAM Sequential Bank Activation Restriction:**

No more than 4 Banks may be activated (or refreshed, in the case of REFpb) in a rolling tFAW window. The number of clocks in a tFAW period is dependent upon the clock frequency, which may vary. If the clock frequency is not changed over this period, converting clocks is done by dividing tFAW[ns] by tCK[ns], and rounding up to the next integer value. As an example of the rolling window, if RU(tFAW/tCK) is 10 clocks, and an ACTIVATE command is issued in clock n, no more than three further ACTIVATE commands can be issued at or between clock n + 1 and n + 9. REFpb also counts as bank activation for purposes of tFAW. If the clock frequency is changed during the tFAW period, the rolling tFAW window may be calculated in clock cycles by adding up the time spent in each clock period. The tFAW requirement is met when the previous n clock cycles exceed the tFAW time.

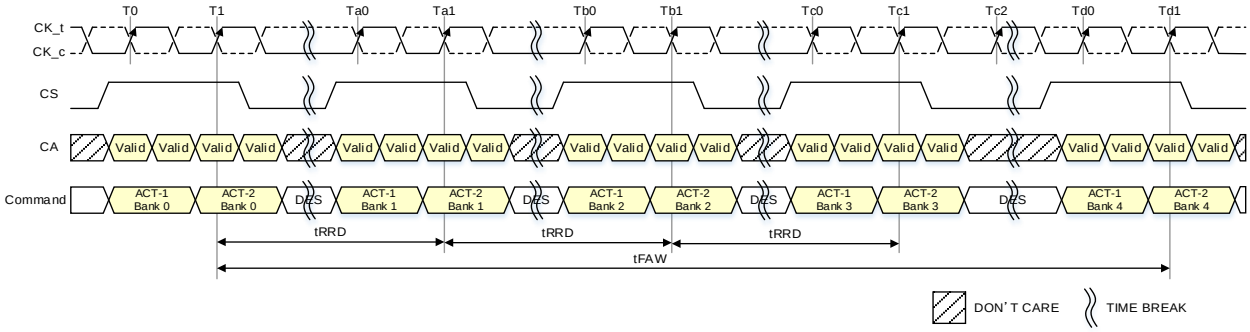


NOTE 1 DES commands are shown for ease of illustration; other commands may be valid at these times.

**Figure 78 — 8 Banks tFAW Timing**

### 7.3.1.2 BG mode SDRAM Operation

Certain restrictions on operation of the BG mode LPDDR5 SDRAM is required to be observed the number of sequential ACTIVATE commands that can be issued.

**BG mode SDRAM Sequential Bank Activation Restriction:**

No more than 4 Banks may be activated (or refreshed, in the case of REFpb) in a rolling tFAW window. The number of clocks in a tFAW period is dependent upon the clock frequency, which may vary. If the clock frequency is not changed over this period, converting clocks is done by dividing tFAW[ns] by tCK[ns], and rounding up to the next integer value. As an example of the rolling window, if RU(tFAW /tCK) is 10 clocks, and an ACTIVATE command is issued in clock n, no more than three further ACTIVATE commands can be issued at or between clock n + 1 and n + 9. REFpb also counts as bank activation for purposes of tFAW. If the clock frequency is changed during the tFAW period, the rolling tFAW window may be calculated in clock cycles by adding up the time spent in each clock period. The tFAW requirement is met when the previous n clock cycles exceed the tFAW time.

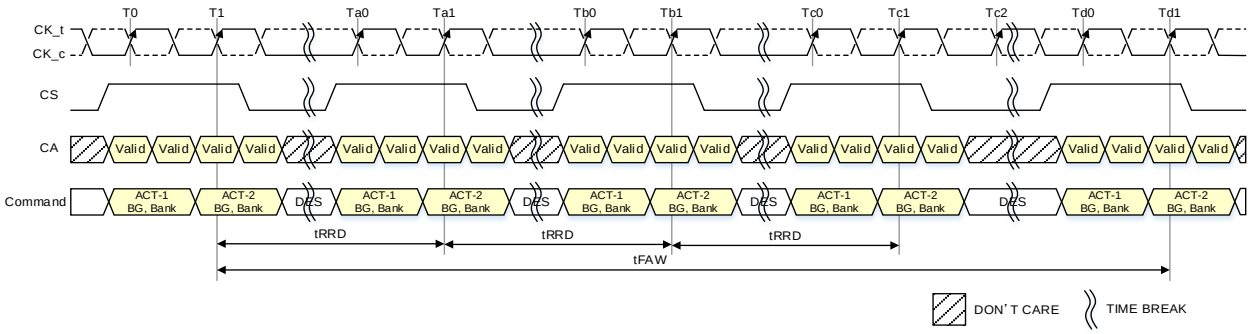


**Figure 79 — BG mode tFAW timing**

### 7.3.2 Pre-Charge Operation

#### 7.3.2.1 Pre-Charge Operation

The Precharge command is used to Precharge or close a bank that has been activated. The Precharge command is initiated with CS, and CA[6:0] in the proper state as defined by the Command Truth Table,**Table 178**. The Precharge command can be used to precharge each bank independently or all banks simultaneously. The AB flag and the bank address bit are used to determine which bank(s) to Precharge. The Precharged bank(s) will be available for subsequent row access tRPab after an all-bank Precharge command is issued, or tRPpb after a single-bank Precharge command is issued.

To ensure that LPDDR5 devices can meet the instantaneous current demands, the row-Precharge time for an all-bank Precharge (tRPab) is longer than the per bank Precharge time (tRPpb).

**Table 187 — Precharge Bank Selection 8 Bank mode**

| AB (CA[6], F1) | BA2 (CA[2], F1) | BA1 (CA[1], F1) | BA0 (CA[0], F1) | Precharged Bank(s) |
|---|---|---|---|---|
| 0 | 0 | 0 | 0 | Bank 0 only |
| 0 | 0 | 0 | 1 | Bank 1 only |
| 0 | 0 | 1 | 0 | Bank 2 only |
| 0 | 0 | 1 | 1 | Bank 3 only |
| 0 | 1 | 0 | 0 | Bank 4 only |
| 0 | 1 | 0 | 1 | Bank 5 only |
| 0 | 1 | 1 | 0 | Bank 6 only |
| 0 | 1 | 1 | 1 | Bank 7 only |
| 1 | Valid | Valid | Valid | All Banks |

### 7.3.2.1 Pre-Charge Operation (Cont'd)

**Table 188 — Precharge Bank Selection 4 Bank / 4 Bank Group mode**

| AB (CA[6], F1) | BG1 (CA[3], F1) | BG0 (CA[2], F1) | BA1 (CA[1], F1) | BA0 (CA[0], F1) | Precharged Bank(s) |
|---|---|---|---|---|---|
| 0 | 0 | 0 | 0 | 0 | Bank Group 0, Bank 0 only |
| 0 | 0 | 0 | 0 | 1 | Bank Group 0, Bank 1 only |
| 0 | 0 | 0 | 1 | 0 | Bank Group 0, Bank 2 only |
| 0 | 0 | 0 | 1 | 1 | Bank Group 0, Bank 3 only |
| 0 | 0 | 1 | 0 | 0 | Bank Group 1, Bank 0 only |
| 0 | 0 | 1 | 0 | 1 | Bank Group 1, Bank 1 only |
| 0 | 0 | 1 | 1 | 0 | Bank Group 1, Bank 2 only |
| 0 | 0 | 1 | 1 | 1 | Bank Group 1, Bank 3 only |
| 0 | 1 | 0 | 0 | 0 | Bank Group 2, Bank 0 only |
| 0 | 1 | 0 | 0 | 1 | Bank Group 2, Bank 1 only |
| 0 | 1 | 0 | 1 | 0 | Bank Group 2, Bank 2 only |
| 0 | 1 | 0 | 1 | 1 | Bank Group 2, Bank 3 only |
| 0 | 1 | 1 | 0 | 0 | Bank Group 3, Bank 0 only |
| 0 | 1 | 1 | 0 | 1 | Bank Group 3, Bank 1 only |
| 0 | 1 | 1 | 1 | 0 | Bank Group 3, Bank 2 only |
| 0 | 1 | 1 | 1 | 1 | Bank Group 3, Bank 3 only |
| 1 | Valid | Valid | Valid | Valid | All Banks |

**Table 189 — Precharge Bank Selection 16 Banks mode**

| AB (CA[6], F1) | BA3 (CA[3], F1) | BA2 (CA[2], F1) | BA1 (CA[1], F1) | BA0 (CA[0], F1) | Precharged Bank(s) |
|---|---|---|---|---|---|
| 0 | 0 | 0 | 0 | 0 | Bank 0 only |
| 0 | 0 | 0 | 0 | 1 | Bank 1 only |
| 0 | 0 | 0 | 1 | 0 | Bank 2 only |
| 0 | 0 | 0 | 1 | 1 | Bank 3 only |
| 0 | 0 | 1 | 0 | 0 | Bank 4 only |
| 0 | 0 | 1 | 0 | 1 | Bank 5 only |
| 0 | 0 | 1 | 1 | 0 | Bank 6 only |
| 0 | 0 | 1 | 1 | 1 | Bank 7 only |
| 0 | 1 | 0 | 0 | 0 | Bank 8 only |
| 0 | 1 | 0 | 0 | 1 | Bank 9 only |
| 0 | 1 | 0 | 1 | 0 | Bank 10 only |
| 0 | 1 | 0 | 1 | 1 | Bank 11 only |
| 0 | 1 | 1 | 0 | 0 | Bank 12 only |
| 0 | 1 | 1 | 0 | 1 | Bank 13 only |
| 0 | 1 | 1 | 1 | 0 | Bank 14 only |
| 0 | 1 | 1 | 1 | 1 | Bank 15 only |
| 1 | Valid | Valid | Valid | Valid | All Banks |

### 7.3.2.1 Pre-Charge Operation (Cont'd)

The Precharge command can be issued after BL/n + tRBTP has been satisfied when bank organization is 16B mode. Refer to 8.1.1 for the command constraints tables for other modes (BG and 8B mode). However Precharge cannot be issued until after tRAS is satisfied. A new bank Activate command can be issued to the same bank after the row Precharge time (tRP) has elapsed. The minimum Read-to- Precharge time must also satisfy a minimum analog time from the rising clock edge the Read command. For LPDDR5 Read-to- Precharge timings see Figure 80.

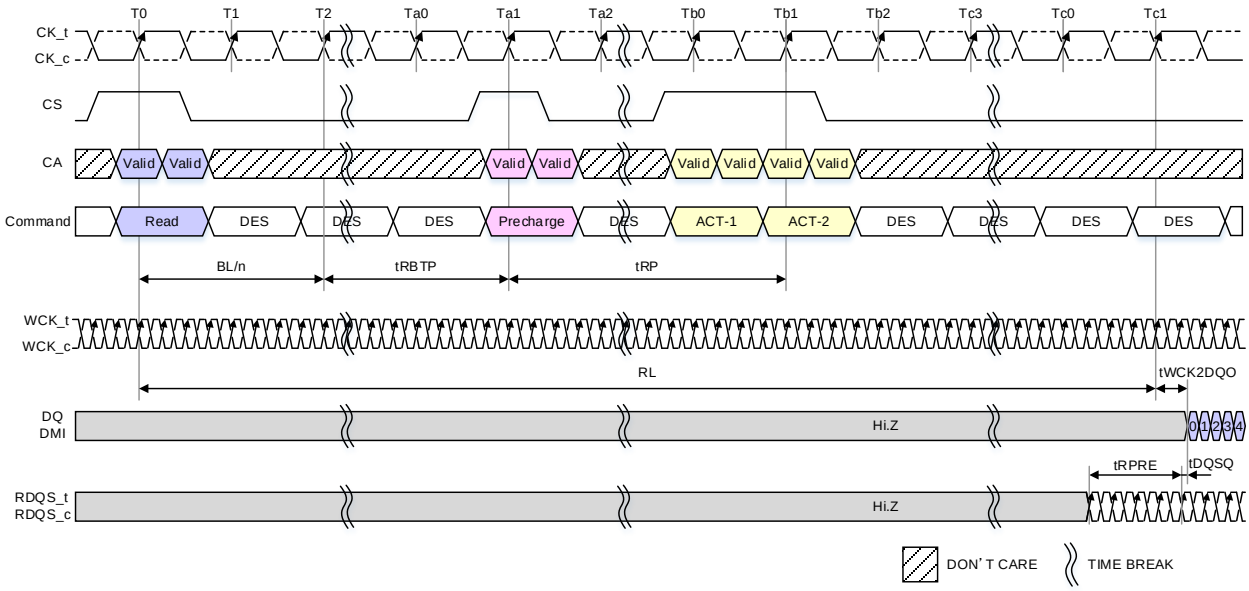


NOTE 1 tWCK2CK is 0ps in this instance.
NOTE 2 DES commands are shown for ease of illustration; other commands may be valid at these times.

**Figure 80 — Burst Read followed by Precharge: 16B Mode, CKR = 4:1, BL=16**

### 7.3.2.1 Pre-Charge Operation (Cont'd)

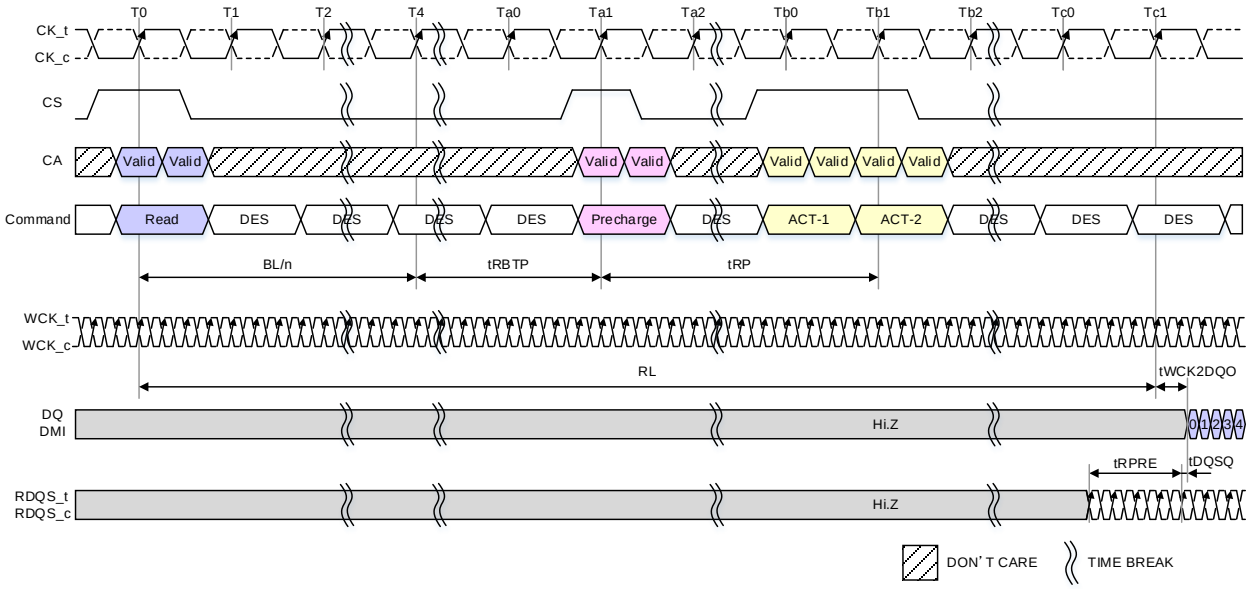


NOTE 1 tWCK2CK is 0ps in this instance.
NOTE 2 DES commands are shown for ease of illustration; other commands may be valid at these times.

**Figure 81 — Burst Read followed by Precharge: 16B Mode, CKR = 4:1, BL=32**

LPDDR5-SDRAM devices write data to the memory array in prefetch multiples. An internal Write operation can only begin after a prefetch group has been clocked, so tWR starts at the prefetch boundaries. The minimum Write-to-Precharge time for commands to the same bank is WL + BL/n + 1 + tWR clock cycles when bank organization is 16B mode. Refer to 8.1.1 for the command constraints table for other modes (BG and 8B mode).

### 7.3.2.1 Pre-Charge Operation (Cont'd)

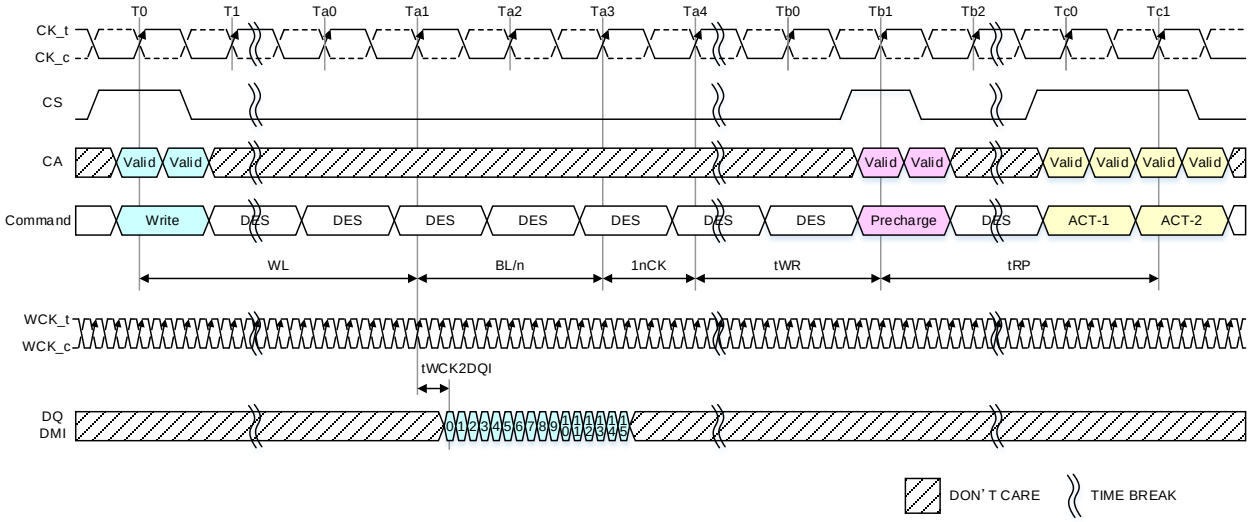


NOTE 1 tWCK2CK is 0ps in this instance.
NOTE 2 tWR starts at the rising edge of CK_t after WL + BL/n + 1nCK from Write command.
NOTE 3 DES commands are shown for ease of illustration; other commands may be valid at these times.

**Figure 82 — Burst Write Followed by Precharge: 16B Mode, CKR = 4:1, BL=16**

### 7.3.2.2 Auto-Precharge Operation

When a Read, Write, or Masked Write command is issued to the device, the AP bit (CA6) can be set to enable the activated bank to automatically begin Precharge at the earliest possible moment during the burst Read, Write or Masked Write cycle.

If AP is LOW when the Read, Write and Masked Write command is issued, then the normal Read, Write, or Masked Write burst operation is executed and the bank remains activated at the completion of the burst.

If AP is HIGH when the Read, Write, or Masked Write command is issued, the Auto-Precharge function is engaged. This feature enables the Precharge operation to be partially or completely hidden during burst Read cycles (dependent upon Read or Write latency), thus improving system performance for random data access. Read with Auto Precharge or Write/Mask Write with Auto Precharge commands may be issued after tRCD has been satisfied. The LPDDR5 SDRAM RAS Lockout feature will schedule the internal Precharge to assure that tRAS is satisfied.

tRC needs to be satisfied prior to issuing subsequent Activate commands to the same bank. Figure 83 shows example of RAS lock function.

### 7.3.2.2 Auto-Precharge Operation (Cont'd)

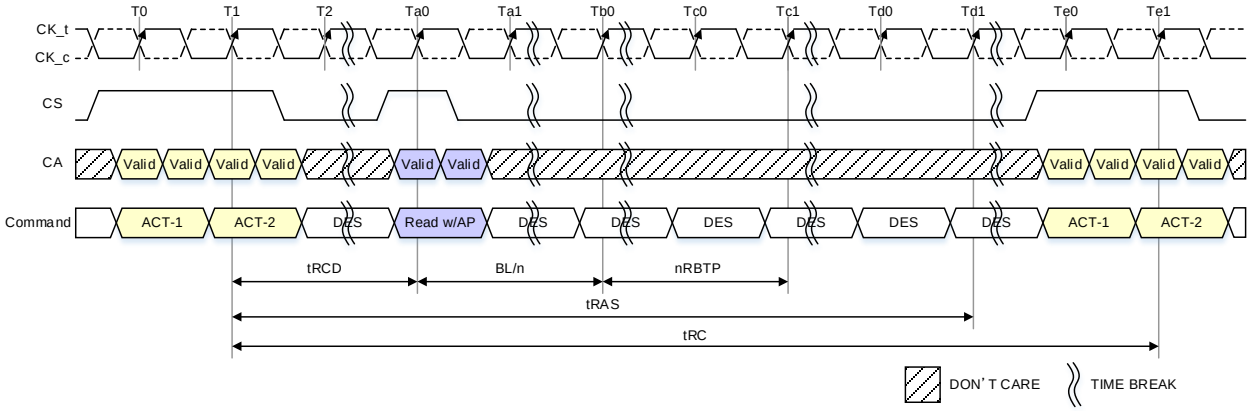


NOTE 1 DES commands are shown for ease of illustration; other commands may be valid at these times.

**Figure 83 — Command Input Timing with RAS lock**

#### 7.3.2.2.1 Delay time from Write to Read with Auto Precharge

In the case of write command followed by Read with auto-Precharge, the controller must satisfy tWR for the write command before initiating the SDRAM internal auto-Precharge. This means that (tWTR + BL/n + nRBTP) should be equal or longer than (tWR) when SDRAM bank organization is 16B. Refer to 8.1.1 for the command constraints table for other modes (BG and 8B mode). Refer to the following figure for details.

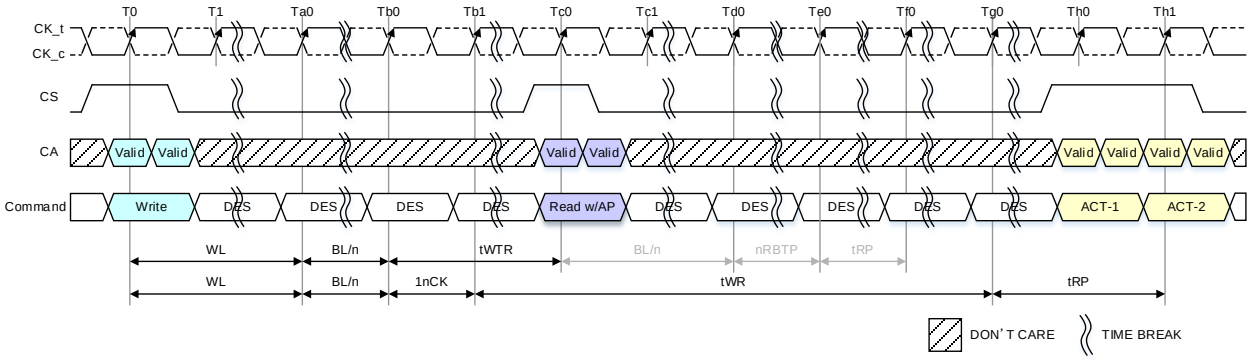


NOTE 1 tWTR starts at the rising edge of CK_t after WL + BL/n from Write command.
NOTE 2 DES commands are shown for ease of illustration; other commands may be valid at these times.

**Figure 84 — Delay time from Write to Read with Auto Precharge: 16B mode**

#### 7.3.2.2.2 Burst Read with Auto-Precharge

If AP is HIGH when a Read command is issued, the Read with Auto-Precharge function is engaged. An internal Precharge procedure starts a following delay time after the Read command. The delay time depends on the bank organization.

Refer to 8.1.1 for the command constraints table for actual delay time from Read with Auto-Precharge.

For LPDDR5 Auto-Precharge calculations, see able 190. Following an Auto-Precharge operation, an Activate command can be issued to the same bank if the following two conditions are both satisfied:

a. The RAS Precharge time (tRP) has been satisfied from the clock at which the Auto-Precharge began, or
b. The RAS cycle time (tRC) from the previous bank activation has been satisfied.

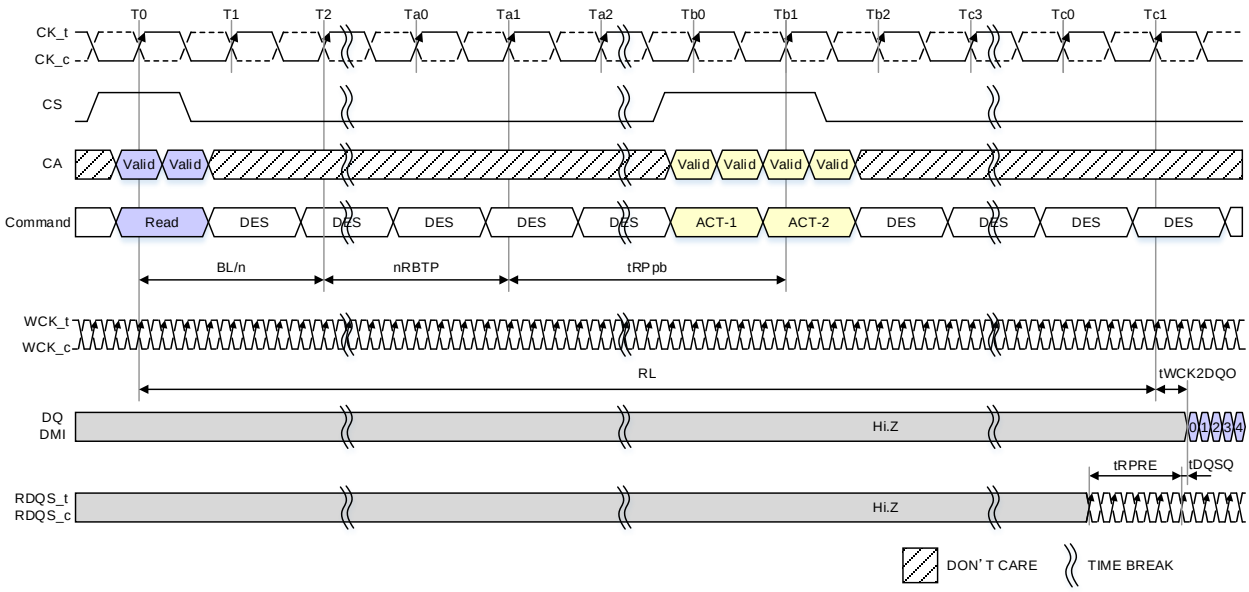


NOTE 1 DES commands are shown for ease of illustration; other commands may be valid at these times.

**Figure 85 — Burst Read with Auto-Precharge: 16B mode**

#### 7.3.2.2.3 Burst Write with Auto-Precharge

If AP is HIGH when a Write command is issued, the Write with Auto-Precharge function is engaged. The device starts an Auto-Precharge on the rising edge nWR cycles after the completion of the Burst Write.

Following a Write with Auto-Precharge, an Activate command can be issued to the same bank if the following conditions are met:

a. The RAS Precharge time (tRP) has been satisfied from the clock at which the Auto-Precharge began, and
b. The RAS cycle time (tRC) from the previous bank activation has been satisfied.

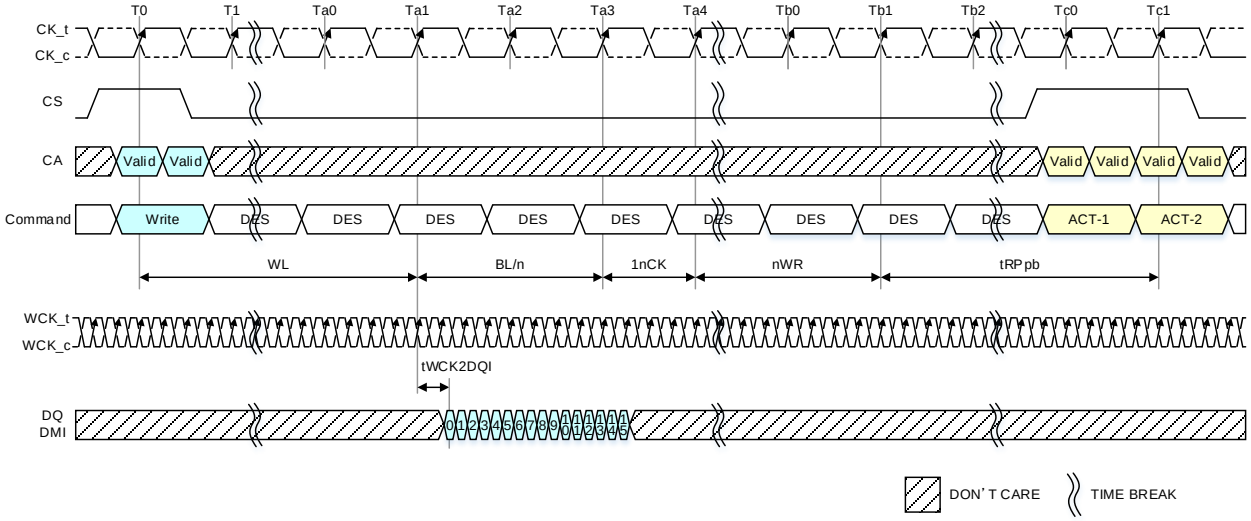


NOTE 1 DES commands are shown for ease of illustration; other commands may be valid at these times.

**Figure 86 — Burst Write with Auto- Precharge: 16B mode**

### 7.3.2.2.3 Burst Write with Auto-Precharge (Cont'd)

**able 190 — Timing Between Commands (PRECHARGE and Auto-PRECHARGE) : DQ ODT is Disable**

| From Command | To Command | Minimum Delay between "From Command" and "To Command" | Unit | Notes |
|---|---|---|---|---|
| READ<br>BL=32 BG mode | PER BANK REFRESH<br>(to same bank as Read) | illegal | - | |
| | ALL BANK REFRESH | illegal | - | |
| READ<br>BL = 16 BG mode<br>BL = 16 16Bank mode<br>BL=32 8Bank mode | PER BANK REFRESH<br>(to same bank as Read) | illegal | - | |
| | ALL BANK REFRESH | illegal | - | |
| WRITE<br>BL=16 & 32 | PER BANK REFRESH<br>(to same bank as Write) | illegal | tCK | |
| | ALL BANK REFRESH | illegal | tCK | |
| MASK-WR<br>BL = 16 BG mode<br>BL = 16 16Bank mode<br>BL=32 8Bank mode | PER BANK REFRESH<br>(to same bank as MAK-WR) | illegal | tCK | |
| | ALL BANK REFRESH | illegal | tCK | |

## 7.4 Read/Write Operation

### 7.4.1 Read and Write Access Operations

TBD

### 7.4.2 Read Preamble and Postamble

TBD

### 7.4.3 Burst Read Operation

An LPDDR5 SDRAM requires to be in WCK2CK synchronization state before internal read operation starts. For read operations, WCK must be driven at least tWCKPRE_Static+tWCKPRE_Toggle_RD before the read DQ burst. LPDDR5 will have a WCK post-amble following MR10 OP[3:2], after completing all read DQ burst.

#### 7.4.3.1 Read Timing

A read command is initiated with CS, and CA[6:0] asserted to the proper state at the rising and falling edges of CK, as defined by the Command Truth Table, **Table 178**. Read burst order is controlled by only one burst order bit, B3, at BL16 mode making the starting column burst address be a multiple of eight (ex. 0x0 or 0x8). The read latency (RL) is defined from the rising edge of the clock that starts a read command to the rising edge of the clock from which tWCKDQO is measured. The first valid data is available of RL * tCK + tWCK2CK + tWCKDQO after the clock rising edge of a read command. WCK is driven by DRAM controller tWCKPRE_Static+tWCKPRE_Toggle_RD before the first valid read data starts. The tWCKPRE_Static+tWCKPRE_Toggle_RD is dependent on operating frequency and the value is summarized in Table 182. The DQ-data is valid for tQW (DQ output window) and the controller must periodically train its internal capture clock to stay centered in the tQW window to compensate for timing changes due to temperature and voltage variation. Burst data is captured by the controller on successive edges of WCK until the 16 or 32 bit data burst is complete. The WCK must remain active (toggling) for tWCKPST (WCK post-amble) after the completion of the burst read. After a burst READ operation, tRBTP must be satisfied before a PRECHARGE command to the same bank can be issued. Pin timings are measured relative to the cross point of WCK_t and WCK_c.

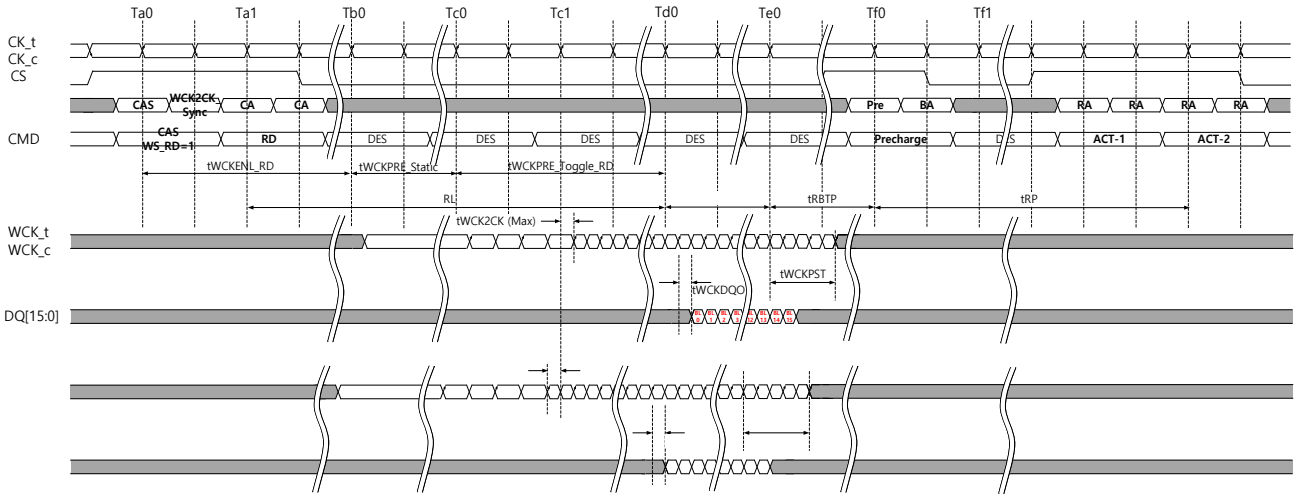


**Figure 87 - Burst Read Operation**

### 7.4.3.2 Read to Read Operation without additional WCK2CK-sync

Figure 88 shows timing diagram of back to back read operation with BL/n_min. The CAS command with WCK2CK-sync is issued before the first read command, making the DRAM in WCK2CK-sync state. Only one CAS command with WCK2CK-sync before the first read command is required, because the WCK2CK-sync state continues until RL + BL/n_max + RD(tWCKPST/tCK).

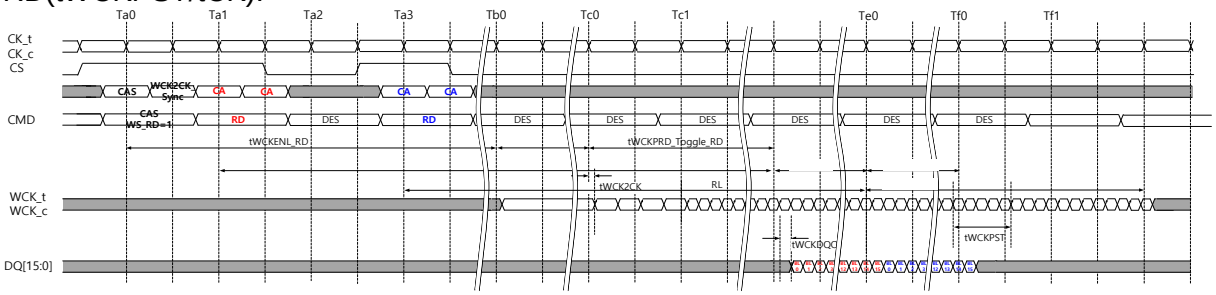


**Figure 88 - Back to back read operation with BL/n_min, BG mode, WCK:CK = 4:1, tWCKPST = 2.5tWCK**

When command gap between two read commands is larger than BL/n_min, second read command can be issued without additional CAS command with WCK2CK-sync until RL + BL/n_max + RD(tWCKPST/tCK). In Figure 89, if the second read command is given before Tf2, DRAM is still in WCK2CK-sync state, and additional CAS command with WCK2CK-sync is not required. To keep DRAM in WCK2CK-sync state, WCK is required to toggle at full-rate from Td1 to Th0+tWCKPST. The second read command also extends the duration DRAM stays in WCK2CK-sync by another RL + BL/n_max + RD(tWCKPST/tCK). Therefore additional CAS command with WCK2CK-sync will not be required if another read command is given before Th2.

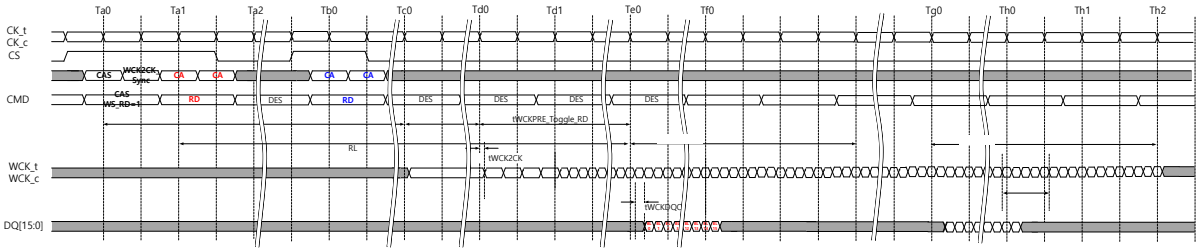


**Figure 89 - Back to back read operation without additional WCK2CK sync sequence, BG mode, WCK:CK = 4:1, tWCKPST = 2.5tWCK**

### 7.4.3.3 Read to Read Operation with additional WCK2CK-sync

When command gap between two read commands is larger than RL + BL/n_max + RD(tWCKPST/tCK), a new WCK2CK-sync sequence is required. Figure 90 shows the case when the command gap between two read commands are larger than RL + BL/n_max + RD(tWCKPST/tCK). In this case a new CAS command with WCK2CK_Sync=1 at Td2 for next read command is required.

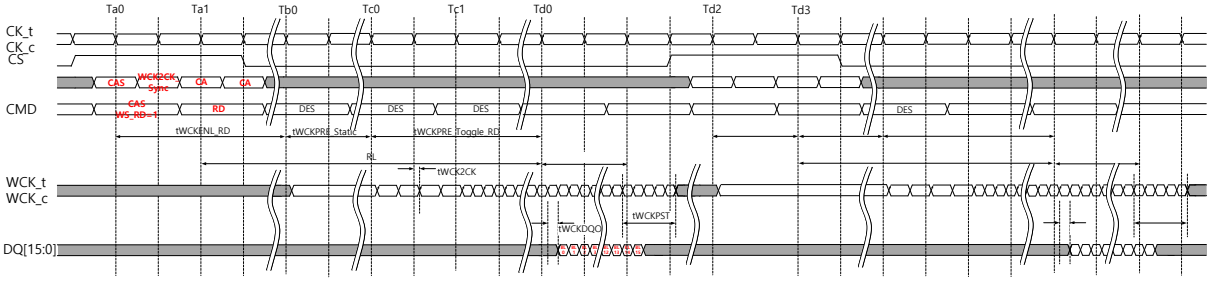


**Figure 90 - Back to back read operation requiring a new WCK2CK-sync sequence (16B mode, WCK:CK = 4:1, tWCKPST = 2.5tWCK)**

### 7.4.3.4 Read operation followed by write operation

If a write command following a read command is issued before RL + BL/n_max + RD(tWCKPST/tCK) from the previous command, additional CAS command with WCK2CK-sync is not required and WCK must keep toggle at its full-rate until the write DQ operation is completed and tWCKPST is satisfied. This case is shown in Figure 91.

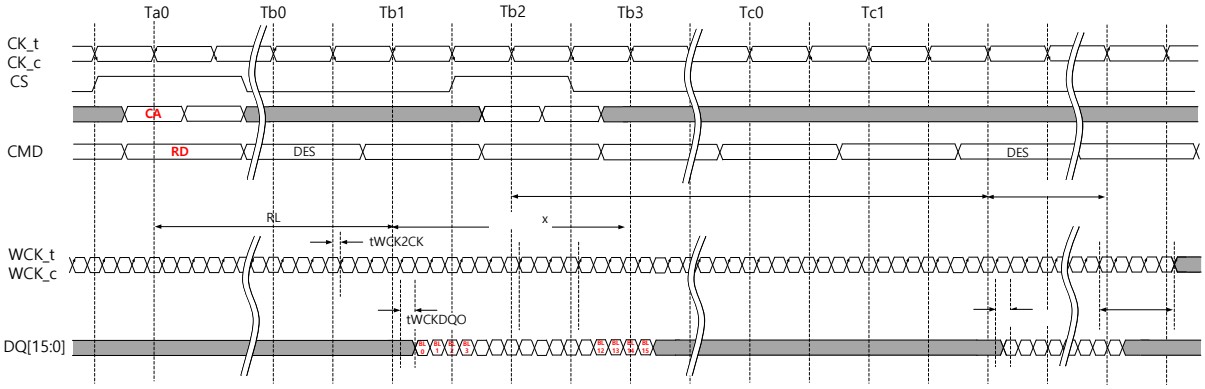


**Figure 91 - Read operation followed by write operation without additional WCK2CK-sync sequence (16B mode, WCK:CK = 4:1, tWCKPST = 2.5tWCK)**

However, an additional WCK2CK-sync sequence is required if the command gap is larger than RL + BL/n_max + RD(tWCKPST/tCK) because WCK2CK-sync state expires. In this case a CAS command with WCK2CK_Sync=1 must be given before the following write command as shown in Figure 92.

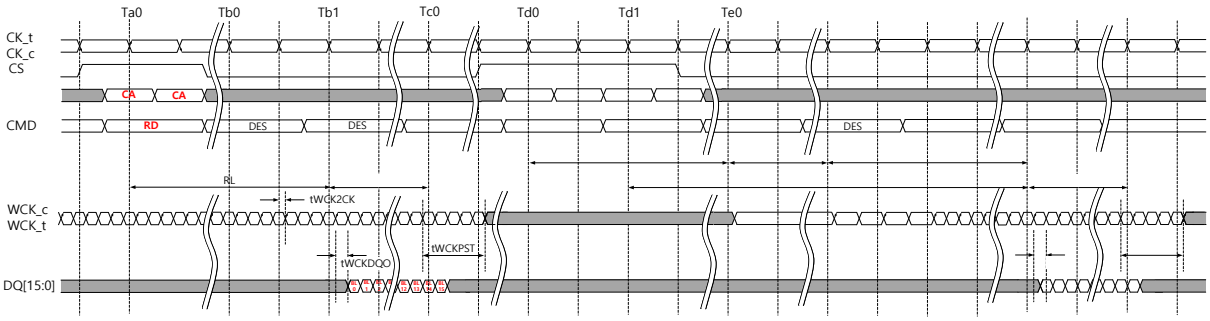


**Figure 92 - Read operation followed by write operation with additional WCK2CK-sync sequence (16B mode, WCK:CK=4:1, tWCKPST=2.5tWCK)**

### 7.4.4 READ Burst end to PRECHARGE Delay (tRBTP)

LPDDR5 device defines tRBTP as a delay from READ Burst end (BL/n_min from READ command) to a PRECHARGE command to specify the timing start point of tRBTP consistently over different Burst Length, WCK:CK ratio and Bank/BG mode setting.

**Table 191 — Core Timing (tRBTP)**

| Parameter | Symbol | Min / Max | WCK:CK Ratio | WCK frequency (MHz) | | | | | | | | | | | | Unit |
|---|---|---|---|---|---|---|---|---|---|---|---|---|---|---|---|---|
| | | | | 267 | 533 | 800 | 1067 | 1375 | 1600 | 1867 | 2134 | 2400 | 2750 | 3000 | 3200 | |
| READ Burst end to PRECHARGE command delay | tRBTP | Min | 2:1 | Max(7.5ns, 4nCK) – 4nCK | | | | | | N/A | | | | | | ns |
| | | | 4:1 | Max[7.5ns, 2nCK] – 2nCK | | | | | | | | | | | | |

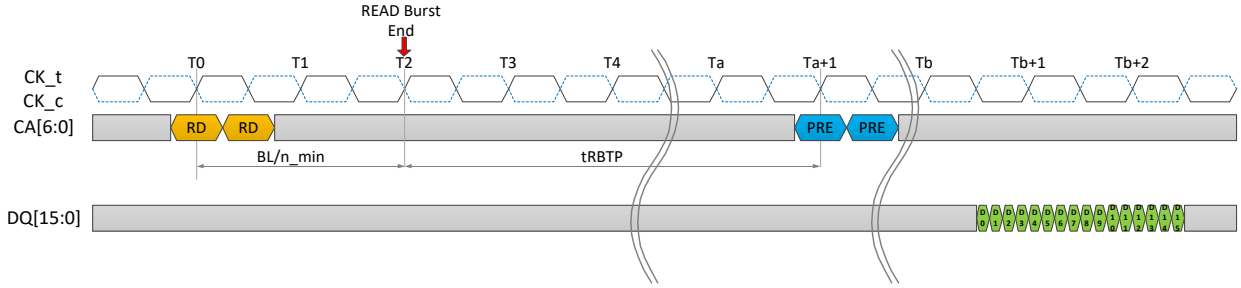


NOTE 1 WCK:CK = 4:1, BL16, BG mode
NOTE 2 BL/n_min = 2*tCK (IO speed > 3200Mbps)

**Figure 93 — Example of READ burst end to PRECHARGE command delay for same banks**

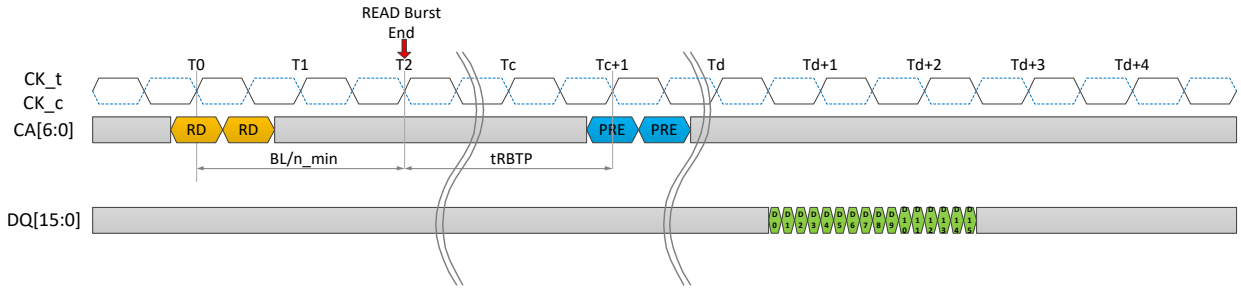


NOTE 1 WCK:CK = 4:1, BL16, 16B mode
NOTE 2 BL/n_min = 2*tCK (IO speed ≤ 3200Mbps)

**Figure 94 — Example of READ burst end to PRECHARGE command delay for same banks**

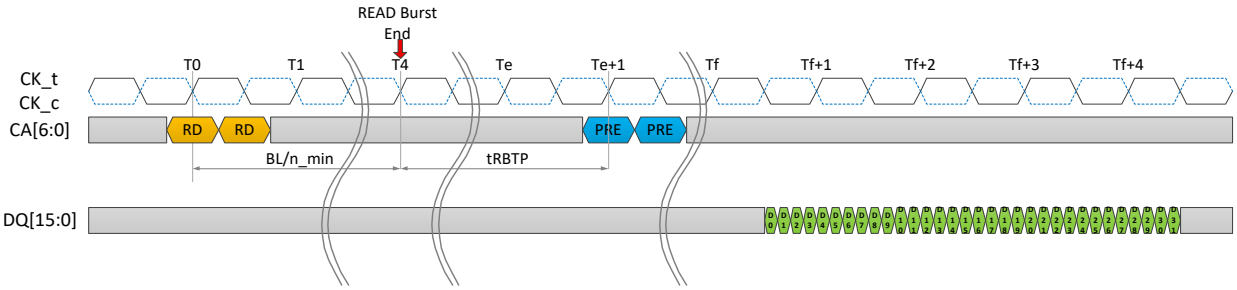


NOTE 1 WCK:CK = 4:1, BL32, 8B mode
NOTE 2 BL/n_min = 4*tCK (IO speed > 3200Mbps)

**Figure 95 — Example of READ burst end to PRECHARGE command delay for same banks**

### 7.4.4 READ Burst end to PRECHARGE Delay (tRBTP) (Cont'd)

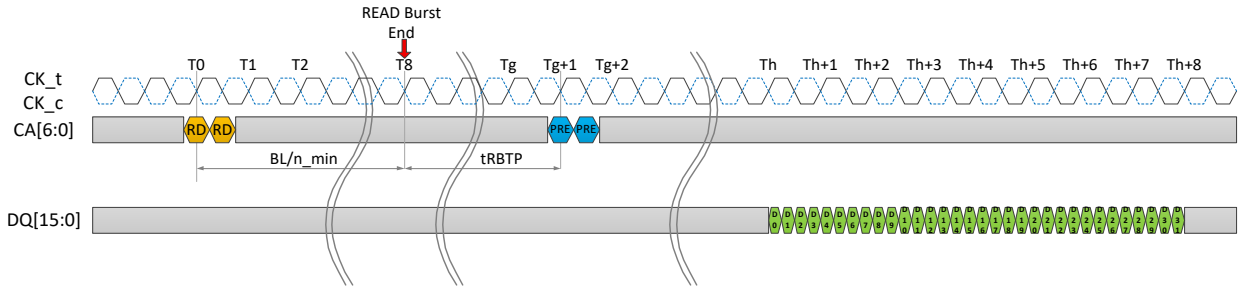


NOTE WCK:CK = 2:1, BL32, 16B mode
NOTE BL/n_min = 8*tCK (IO speed ≤ 3200Mbps)

**Figure 96 — Example of READ burst end to PRECHARGE command delay for same banks**

### 7.4.5 RDQS Mode

For device operation at high clock frequencies, LPDDR5 may be set into RDQS mode in which a READ DATA STROBE (or a pair of READ DATA STROBE) will be sent on RDQS_c pin and RDQS_t pin along with the READ data. SoC will use a single-ended RDQS or a differential RDQS to latch the READ data.

#### 7.4.5.1 RDQS Timing

Read timing with RDQS mode enabled is shown in **Figure 97**. Except the additional RDQS timing, all the timings are same as those of READ operation (7.4.3). RDQS-related parameters, tDQSQ, tRPRE and tRPST are defined in Table 192.

RDQS is assumed as a differential pair, RDQS_t and RDQS_c in **Figure 97**.

The read latency (RL) is defined from the rising edge of the clock that starts a read command to the rising edge of the clock from which tWCKDQO is measured. The first valid data is available for RL*tCK + tWCK2CK + tWCKDQO after the clock rising edge of a read command.

The first latching edge of RDQS will start later than the first valid data with "tDQSQ" delay and tDQSQ is a known parameter in LPDDR4.

RDQS requires a pre-amble prior at the first latching edge (the rising edge of RDQS with the first valid data), and it requires a post-amble after the last latching edge. The pre-amble (tRPRE) and post-amble (tRPST) time lengths are defined as parameters can be set via mode register writes (MRW). tRPRE and tRPST are assumed 2tWCK in
Figure **97**, and the specific number is TBD.

### 7.4.5.1 RDQS Mode (Cont'd)

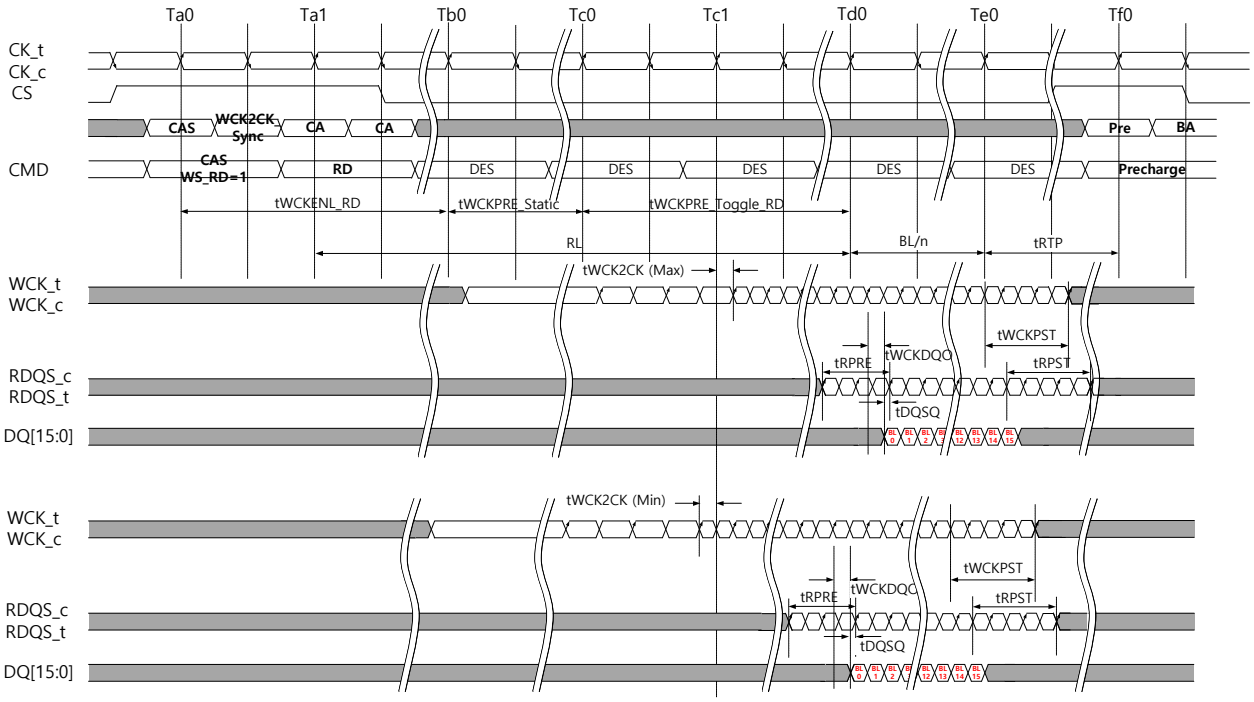


**Figure 97 — Read timing with RDQS and related timing parameters**

### 7.4.5.2 RDQS Related Functionalities

LPDDR5 supports both a single-ended RDQS and a differential RDQS to help SoC to optimize power and performance. RDQS configuration is selected via mode register writes (MRW).

RDQS_t is used to send a read data strobe in a single-ended RDQS mode. RDQS_c and RDQS_t are used to send read data strobes in a differential RDQS mode.

The examples of RDQS settings are shown in **Figure 98**. There can be two cases as shown in Figure 100.

### 7.4.5.2 RDQS Related Functionalities (Cont'd)

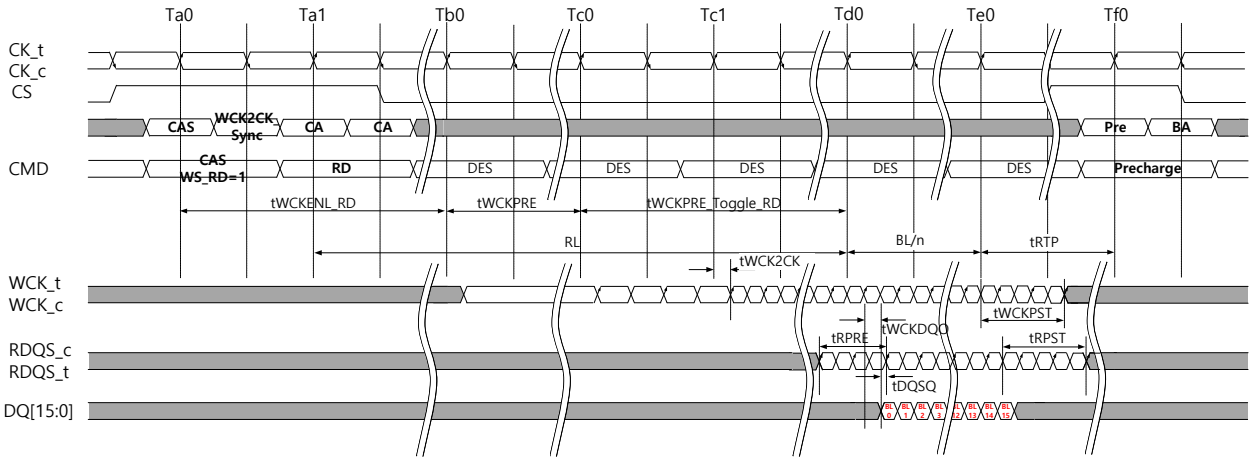


CASE 1. Differential and Full-rate RDQS

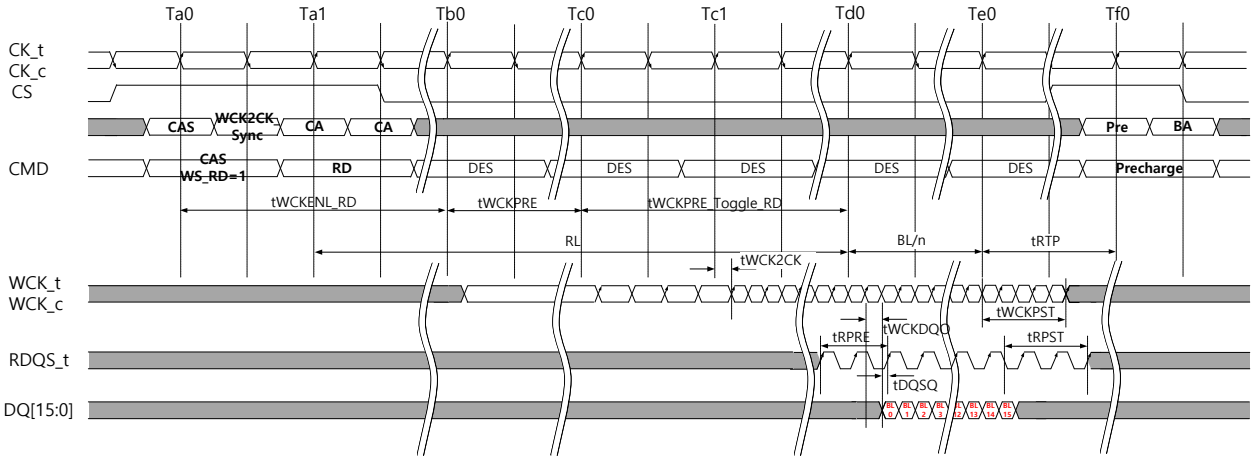


CASE 2. Single-ended and Full-rate RDQS

**Figure 98 — 4 All the possible types of RDQS**

### 7.4.5.3 Mode Registers for RDQS

The length of RDQS pre-amble and post-amble can be determined by MR10 OP[4:7]. The specific number is TBD.

RDQS mode configuration can also be changed by MR20 OP[1:0]. When OP[1:0]=00 at MR20, RDQS mode will not be supported and SOC should latch the read data with its own internal clock. Single-ended RDQS mode and differential RDQS mode can be selected by setting OP[1:0] to 01, 10 and 11 each.

### 7.4.5.3 Mode Registers for RDQS (Cont'd)

**Table 192 — RDQS Timing Parameters**

| Parameters | Symbol | Min/ Max | Value | Unit | Note |
|---|---|---|---|---|---|
| READ preamble | tRPRE | Min | TBD | tWCK | |
| READ postamble | tRPST | Min | TBD | tWCK | |
| RDQS_c low impedance time from CK_t, CK_c | tLZ(DQS) | Min | TBD | ps | |
| RDQS_c high impedance time from CK_t, CK_c | tHZ(DQS) | Max | TBD | ps | |
| RDQS-DQ skew | tDQSQ | Max | TBD | ps | |

### 7.4.5.4 RDQS Pattern Definition

LPDDR5 device requires MR20 OP[1:0] non zero to enable RDQS operation. The RDQS strobe provides a pre-amble pattern prior to the first latching edge (the rising edge of RDQS with data valid), and it also provides a post-amble pattern after the last latching edge. The pre-amble and post-amble length and type are set to MR10 via Mode Register Write commands. In Read to Read operations with BL/n, post-amble for 1st Read command and preamble for 2nd Read command will disappear to create consecutive RDQS latching edge for seamless burst operations. But in the case of Read to Read operations with command interval of BL/n + k*nCK, they will not completely disappear because it's not seamless burst operations. Timing diagrams and RDQS pattern definition tables in this material describe RDQS post-amble and pre-amble merging behavior in Read to Read operations with BL/n + k*nCK.

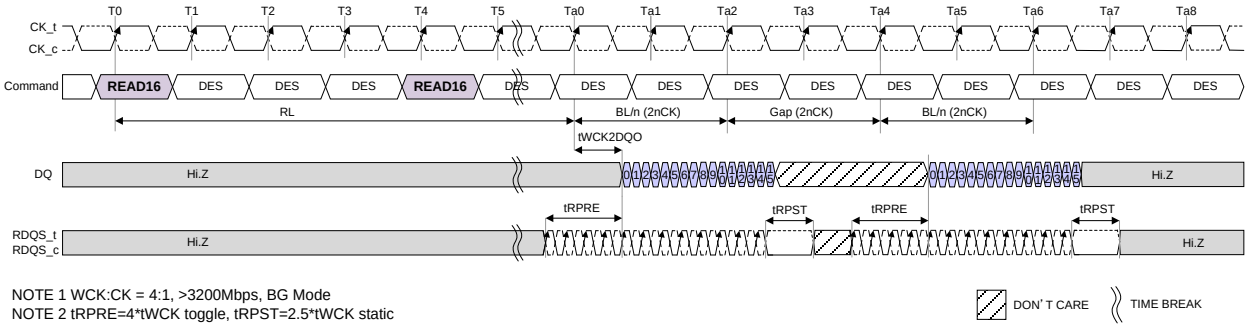


**Figure 99 — READ16 to READ16 2nCK Gap Operation: CKR (WCK vs. CK) = 4:1, tRPST=2.5nWCK**

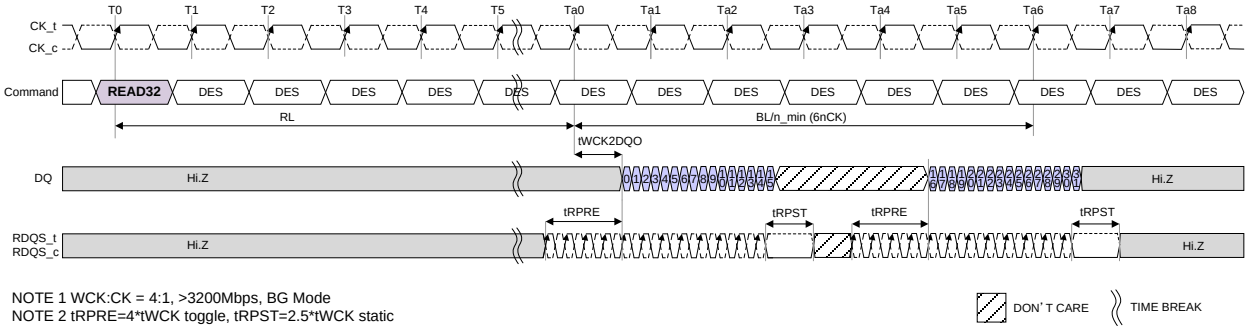


**Figure 100 — BG Mode Read32 Operation: CKR (WCK vs. CK) = 4:1, tRPST=2.5nWCK**

### 7.4.5.4 RDQS Pattern Definition (Cont'd)

**Table 193 — RDQS Pattern Definition in case READ to READ command timing is BL/n + k*nCK (k=1, 2)**

| RDQS PST MR10 OP[0] & OP[7:6] | RDQS PRE MR10 OP[5:4] | 1nCK(4nWCK) Gap WCK Cycle Number | | | | 2nCK(8nWCK) Gap WCK Cycle Number | | | | | | | |
|---|---|---|---|---|---|---|---|---|---|---|---|---|---|
| | | 1 | 2 | 3 | 4 | 1 | 2 | 3 | 4 | 5 | 6 | 7 | 8 |
| 4.5*tWCK Static | tRDQS_PRE + 4*tWCK Toggle | T | T | T | T | S | S | S | S | T | T | T | T |
| | 4*tWCK Toggle | T | T | T | T | S | S | S | S | T | T | T | T |
| | 2*tWCK Static + 2*tWCK Toggle | S | S | T | T | S | S | S | S | S | S | T | T |
| | 4*tWCK Static | S | S | S | S | S | S | S | S | S | S | S | S |
| 2.5*tWCK Static | tRDQS_PRE + 4*tWCK Toggle | T | T | T | T | S | S | S | S | T | T | T | T |
| | 4*tWCK Toggle | T | T | T | T | S | S | X | X | T | T | T | T |
| | 2*tWCK Static + 2*tWCK Toggle | S | S | T | T | S | S | X | X | S | S | T | T |
| | 4*tWCK Static | S | S | S | S | S | S | X | X | S | S | S | S |
| 0.5*tWCK Static | tRDQS_PRE + 4*tWCK Toggle | T | T | T | T | X | X | S | S | T | T | T | T |
| | 4*tWCK Toggle | T | T | T | T | X | X | X | X | T | T | T | T |
| | 2*tWCK Static + 2*tWCK Toggle | S | S | T | T | X | X | X | X | S | S | T | T |
| | 4*tWCK Static | S | S | S | S | X | X | X | X | S | S | S | S |
| 4.5*tWCK Toggle | tRDQS_PRE + 4*tWCK Toggle | T | T | T | T | T | T | T | T | T | T | T | T |
| | 4*tWCK Toggle | T | T | T | T | T | T | T | T | T | T | T | T |
| | 2*tWCK Static + 2*tWCK Toggle | T | T | T | T | T | T | T | T | S | S | T | T |
| | 4*tWCK Static | T | T | T | T | T | T | T | T | S | S | S | S |
| 2.5*tWCK Toggle | tRDQS_PRE + 4*tWCK Toggle | T | T | T | T | T | T | S | S | T | T | T | T |
| | 4*tWCK Toggle | T | T | T | T | T | T | X | X | T | T | T | T |
| | 2*tWCK Static + 2*tWCK Toggle | T | T | T | T | T | T | X | X | S | S | T | T |
| | 4*tWCK Static | T | T | S | S | T | T | X | X | S | S | S | S |
| 0.5*tWCK Toggle | tRDQS_PRE + 4*tWCK Toggle | T | T | T | T | X | X | S | S | T | T | T | T |
| | 4*tWCK Toggle | T | T | T | T | X | X | X | X | T | T | T | T |
| | 2*tWCK Static + 2*tWCK Toggle | S | S | T | T | X | X | X | X | S | S | T | T |
| | 4*tWCK Static | S | S | S | S | X | X | X | X | S | S | S | S |

NOTE 1 RDQS pattern abbreviation: S(Static), T(Toggle), X(Don't Care).
NOTE 2 CKR(WCK:CK) is 4:1.
NOTE 3 MR10 OP[5:4]=11B (tRDQS_PRE + 4*tWCK Toggle) can be supported over 3200Mbps operation.

### 7.4.5.4 RDQS Pattern Definition (Cont'd)

**Table 194 — RDQS Pattern Definition in case READ to READ command timing delay is BL/n + k*nCK (k=1, 2, 3)**

| RDQS PST MR10 OP[0] & OP[7:6] | RDQS PRE MR10 OP[5:4] | 1nCK(2nWCK) Gap | | 2nCK(4nWCK) Gap | | | | 3nCK(6nWCK) Gap | | | | | |
|---|---|---|---|---|---|---|---|---|---|---|---|---|---|
| | | WCK Cycle Number | | WCK Cycle Number | | | | WCK Cycle Number | | | | | |
| | | 1 | 2 | 1 | 2 | 3 | 4 | 1 | 2 | 3 | 4 | 5 | 6 |
| 4.5*tWCK Static | 4*tWCK Toggle | T | T | T | T | T | T | S | S | T | T | T | T |
| | 2*tWCK Static + 2*tWCK Toggle | T | T | S | S | T | T | S | S | S | S | T | T |
| | 4*tWCK Static | S | S | S | S | S | S | S | S | S | S | S | S |
| 2.5*tWCK Static | 4*tWCK Toggle | T | T | T | T | T | T | S | S | T | T | T | T |
| | 2*tWCK Static + 2*tWCK Toggle | T | T | S | S | T | T | S | S | S | S | T | T |
| | 4*tWCK Static | S | S | S | S | S | S | S | S | S | S | S | S |
| 0.5*tWCK Static | 4*tWCK Toggle | T | T | T | T | T | T | X | X | T | T | T | T |
| | 2*tWCK Static + 2*tWCK Toggle | T | T | S | S | T | T | X | X | S | S | T | T |
| | 4*tWCK Static | S | S | S | S | S | S | X | X | S | S | S | S |
| 4.5*tWCK Toggle | 4*tWCK Toggle | T | T | T | T | T | T | T | T | T | T | T | T |
| | 2*tWCK Static + 2*tWCK Toggle | T | T | T | T | T | T | T | T | T | T | T | T |
| | 4*tWCK Static | T | T | T | T | T | T | T | T | T | T | S | S |
| 2.5*tWCK Toggle | 4*tWCK Toggle | T | T | T | T | T | T | T | T | T | T | T | T |
| | 2*tWCK Static + 2*tWCK Toggle | T | T | T | T | T | T | T | T | S | S | T | T |
| | 4*tWCK Static | T | T | T | T | S | S | T | T | S | S | S | S |
| 0.5*tWCK Toggle | 4*tWCK Toggle | T | T | T | T | T | T | X | X | T | T | T | T |
| | 2*tWCK Static + 2*tWCK Toggle | T | T | S | S | T | T | X | X | S | S | T | T |
| | 4*tWCK Static | S | S | S | S | S | S | X | X | S | S | S | S |

NOTE 1 RDQS pattern abbreviation: S(Static), T(Toggle), X(Don't Care).
NOTE 2 CKR(WCK:CK) is 2:1.

### 7.4.6 Write Preamble and Postamble

TBD

### 7.4.7 Burst Write Operation

An LPDDR5 SDRAM requires to be in WCK2CK synchronization state before the internal write operation starts. For WRITE operations, WCK must be driven at least tWCKPRE_Static + tWCKPRE_Toggle_WR before the write DQ burst. LPDDR5 will have a WCK post-amble following MR10 OP[3:2] after completing all write DQ burst.

#### 7.4.7.1 Write Timing

A WRITE command is initiated with CS, and CA[6:0] asserted to the proper state at the rising and falling edges of CK, as defined by the Command Truth Table. LPDDR5 write command does not support burst ordering, so that the starting column burst address is always aligned with a 32B boundary. The write latency (WL) is defined from the rising edge of the clock that starts a write command to the rising edge of the clock from which tWCKDQI is measured. The first valid “latching” edge of WCK must be driven WL * tCK + tWCK2CK after the rising edge of clock that completes a write command. The LPDDR5-SDRAM uses an un-matched WCK-DQ path for lower power, so the WCK must arrive at the SDRAM ball prior to the DQ signal by the amount of tWCKDQI. WCK is driven by DRAM controller tWCKPRE_Static+tWCKPRE_Toggle_WR before the first valid rising strobe edge. The tWCKPRE_Static+tWCKPRE_Toggle_WR dependent on operating frequency and the amount is summarized in Table 182. The WCK must be trained to arrive at the DQ pad center-aligned with the DQ-data. The DQ-data must be held for tDIVW (data input valid window) and the WCK must be periodically trained to stay centered in the tDIVW window to compensate for timing changes due to temperature and voltage variation. Burst data is captured by the SDRAM on successive edges of WCK until the 16 or 32 bit data burst is complete. The WCK must remain active (toggling) for tWCKPST (WCK post-amble) after the completion of the burst WRITE. After a burst WRITE operation, tWR must be satisfied before a PRECHARGE command to the same bank can be issued. Pin input timings are measured relative to the crosspoint of WCK_t and WCK_c.

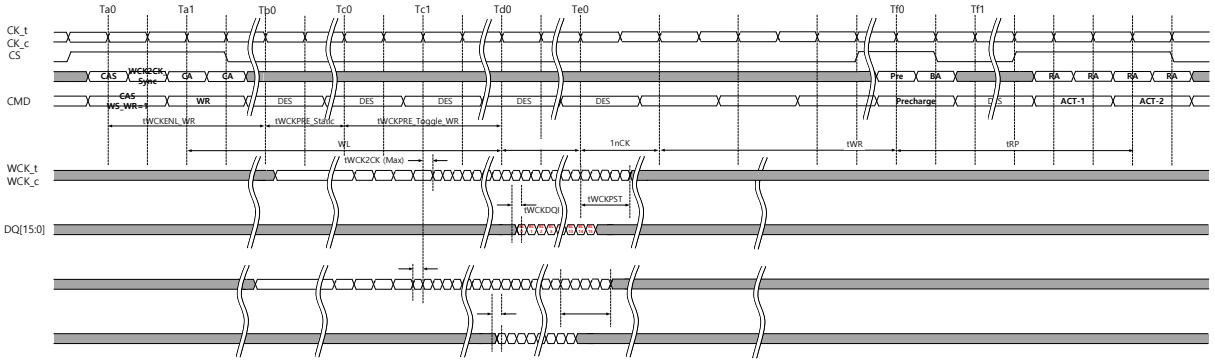


**Figure 101 - Burst Write Operation**

### 7.4.7.2 Write to Write Operation without additional WCK2CK-sync

Figure 102 shows timing diagram of back to back write operation with BL/n_min. The CAS command with WCK2CK-sync is issued before the first write command, making the DRAM in WCK2CK-sync state. Only one CAS WCK2CK-sync command before the first write command is required, because the WCK2CK-sync state continues until WL + BL/n_max + RD(tWCKPST/tCK).

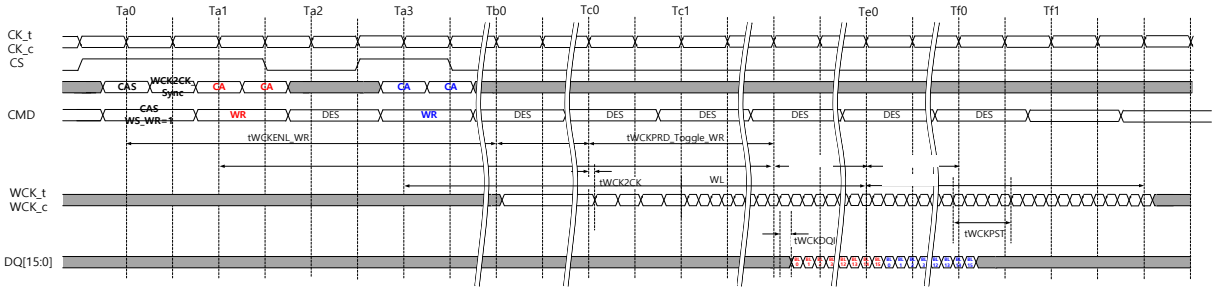


**Figure 102 - Back to back write operation with BL/n_min, BG mode, WCK:CK = 4:1, tWCKPST=2.5tWCK**

When the command gap between two write commands is larger than BL/n_min, second write command can be issued without additional WCK2CK-sync command until WL + BL/n_max + RD(tWCKPST/tCK). In Figure 103, if the second write command is given before Tf2, DRAM is still in WCK2CK-sync state, and additional CAS command with WCK2CK-sync is not required. To keep DRAM in WCK2CK-sync state, WCK is required to toggle at full-rate from Td1 to Th0+tWCKPST. The second write command also extends the duration DRAM stays in WCK2CK-sync by another WL + BL/n_max + RD(tWCKPST/tCK) . Therefore additional CAS command with WCK2CK-sync will not be required if another write command is given before Th2.

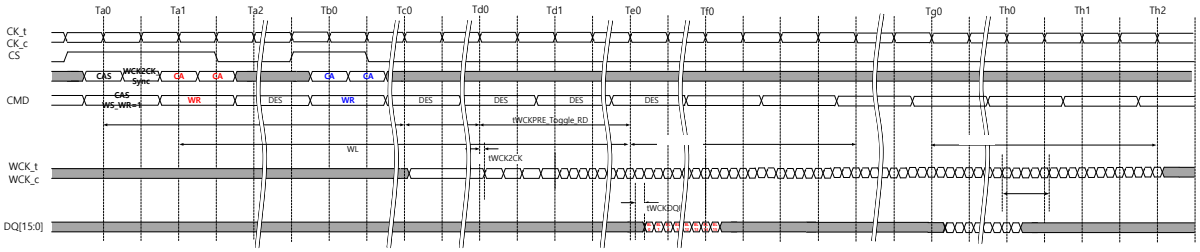


**Figure 103 - Back to back write operation without additional WCK2CK sync sequence, BG mode, WCK:CK = 4:1, tWCKPST = 2.5tWCK**

### 7.4.7.3 Write to Write Operation with additional WCK2CK-sync

When the command gap between two write commands is larger than WL + BL/n_max + RD(tWCKPST/tCK), a new WCK2CK synchronization sequence is required. Figure 104 show the case when the command gap between two write commands are larger than WL + BL/n_max + RD(tWCKPST/tCK). In this case a new CAS command with WCK2CK_Sync=1 at Td2 for next write command.

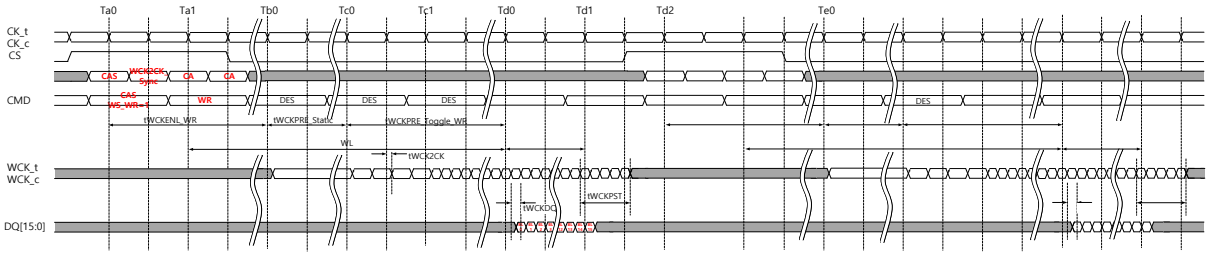


**Figure 104 - Back to back write operation requiring a new WCK2CK-sync sequence (16B mode, WCK:CK = 4:1, tWCKPST = 2.5tWCK)**

### 7.4.7.4 Write operation followed by read operation

When a read command follows a write command, the minimum gap between two commands is defined as min(tWTR). tWTR is measured from the rising clock edge that satisfies WL + BL/n in 16B mode and 8Bank mode. tWTR_L (Same BG) / tWTR_S (Different BG) is measured from the rising clock edge that satisfies WL + BL/n_max (Same BG) / WL + BL/n_min (Different BG) respectively after a write command to the following read command. Therefore, an LPDDR5 DRAM always loses WCK2CK-sync information in write to read turn around, requiring a new WCK2CK synchronization sequence for the following write command. Figure 105Figure X5 illustrates this case.

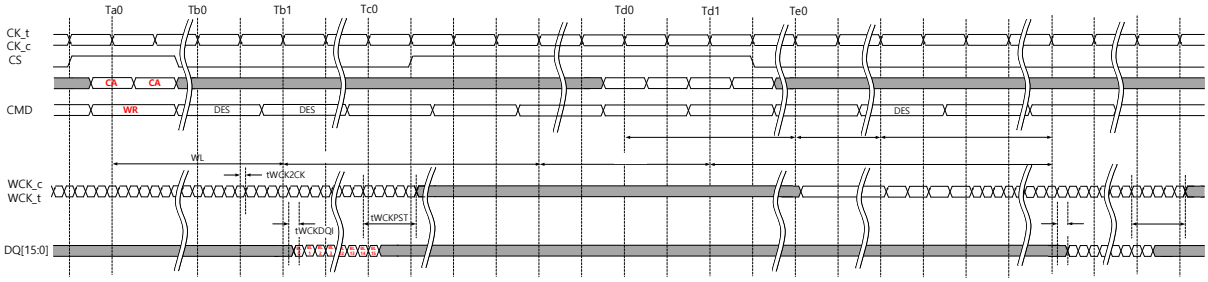


**Figure 105 - Write operation followed by read operation with additional WCK2CK-sync sequence (16B mode, WCK:CK = 4:1, tWCKPST = 2.5tWCK)**

### 7.4.8 Read and Write Latency

#### 7.4.8.1 Read and Read-to-Precharge Latencies

Latencies related to Read timing are measured from the rising edge of CK_t that begins the Read command. Latencies are specified separately for the DVFSC Disabled and DVFSC Enabled cases. For each MR2 OP[3:0] setting, device operation at less than the CK lower limit or higher than the CK upper limit is illegal.

**Table 195 — Read Latencies for Read Link ECC off case (DVFSC disabled)**

| MR2 OP[3:0] | Data Rate Lower Limit (Mbps) | Data Rate Upper Limit (Mbps) | WCK:CK Ratio | Lower Clock Frequency Limit (>) (MHz) | Upper Clock Frequency Limit (<=) (MHz) | Read Latency | | | nRBTP [nCK] |
|---|---|---|---|---|---|---|---|---|---|
| | | | | | | Set 0 | Set 1 | Set 2 | |
| $0000_B$ | 40 | 533 | 2:1 | 10 | 133 | 6 | 6 | 6 | 0 |
| $0001_B$ | 533 | 1067 | | 133 | 267 | 8 | 8 | 8 | 0 |
| $0010_B$ | 1067 | 1600 | | 267 | 400 | 10 | 10 | 12 | 0 |
| $0011_B$ | 1600 | 2133 | | 400 | 533 | 12 | 14 | 14 | 0 |
| $0100_B$ | 2133 | 2750 | | 533 | 688 | 16 | 16 | 18 | 2 |
| $0101_B$ | 2750 | 3200 | | 688 | 800 | 18 | 20 | 20 | 2 |
| $0000_B$ | 40 | 533 | 4:1 | 5 | 67 | 3 | 3 | 3 | 0 |
| $0001_B$ | 533 | 1067 | | 67 | 133 | 4 | 4 | 4 | 0 |
| $0010_B$ | 1067 | 1600 | | 133 | 200 | 5 | 5 | 6 | 0 |
| $0011_B$ | 1600 | 2133 | | 200 | 267 | 6 | 7 | 7 | 0 |
| $0100_B$ | 2133 | 2750 | | 267 | 344 | 8 | 8 | 9 | 1 |
| $0101_B$ | 2750 | 3200 | | 344 | 400 | 9 | 10 | 10 | 1 |
| $0110_B$ | 3200 | 3733 | | 400 | 467 | 10 | 11 | 12 | 2 |
| $0111_B$ | 3733 | 4267 | | 467 | 533 | 12 | 13 | 14 | 2 |
| $1000_B$ | 4267 | 4800 | | 533 | 600 | 13 | 14 | 15 | 3 |
| $1001_B$ | 4800 | 5500 | | 600 | 688 | 15 | 16 | 17 | 4 |
| $1010_B$ | 5500 | 6000 | | 688 | 750 | 16 | 17 | 19 | 4 |
| $1011_B$ | 6000 | 6400 | | 750 | 800 | 17 | 18 | 20 | 4 |

NOTE 1 The LPDDR5 SDRAM device should not be operated at a frequency above the upper frequency limit, or below the lower frequency limit, shown for each RL, or nRBTP value.

NOTE 2 The programmed value of nRBTP is the number of clock cycles the LPDDR5 SDRAM device uses to determine the starting point of an internal Precharge operation after a Read burst with AP(Auto Precharge). It is determined by RU(tRBTP/tCK).

NOTE 3 Some operating features can affect Read Latency:

| Feature | Description |
|---|---|
| 1 | Byte Mode |
| 2 | Read DBI and/or Read Data Copy |

RL Set 0 applies when no features are enabled.
RL Set 1 applies when one feature is enabled (1 or 2).
RL Set 2 applies when two features are enabled.

### 7.4.8.1 Read and Read-to-Precharge Latencies (Cont'd)

**Table 196 — Read Latencies for Read Link ECC off case (DVFSC enabled)**

| MR2 OP[3:0] | Data Rate Lower Limit (Mbps) | Data Rate Upper Limit (Mbps) | WCK:CK Ratio | Lower Clock Frequency Limit (>) (MHz) | Upper Clock Frequency Limit (<=) (MHz) | Read Latency | | | nRBTP [nCK] |
|---|---|---|---|---|---|---|---|---|---|
| | | | | | | Set 0 | Set 1 | Set 2 | |
| $0000_B$ | 40 | 533 | 2:1 | 10 | 133 | 6 | 6 | 6 | 0 |
| $0001_B$ | 533 | 1067 | | 133 | 267 | 8 | 10 | 10 | 0 |
| $0010_B$ | 1067 | 1600 | | 267 | 400 | 12 | 12 | 14 | 0 |
| $0000_B$ | 40 | 533 | 4:1 | 5 | 67 | 3 | 3 | 3 | 0 |
| $0001_B$ | 533 | 1067 | | 67 | 133 | 4 | 5 | 5 | 0 |
| $0010_B$ | 1067 | 1600 | | 133 | 200 | 6 | 6 | 7 | 0 |

NOTE 1 The LPDDR5 SDRAM device should not be operated at a frequency above the upper frequency limit, or below the lower frequency limit, shown for each RL, or nRBTP value.

NOTE 2 The programmed value of nRBTP is the number of clock cycles the LPDDR5 SDRAM device uses to determine the starting point of an internal Precharge operation after a Read burst with AP(Auto Precharge). It is determined by RU(tRBTP/tCK).

NOTE 3 Some operating features can affect Read Latency:

| Feature | Description |
|---|---|
| 1 | Byte Mode |
| 2 | Read DBI and/or Read Data Copy |

RL Set 0 applies when no features are enabled.
RL Set 1 applies when one feature is enabled (1 or 2).
RL Set 2 applies when two features are enabled.

**Table 197 - Read Latencies for Read Link ECC on case (DVFSC disabled)**

| MR2 OP[3:0] | Data Rate Lower Limit (Mbps) | Data Rate Upper Limit (Mbps) | WCK:CK Ratio | Lower Clock Frequency Limit (>) (MHz) | Upper Clock Frequency Limit (<=) (MHz) | Read Latency | | nRBTP [nCK] |
|---|---|---|---|---|---|---|---|---|
| | | | | | | Set 0 | Set 1 | |
| $0110_B$ | 3200 | 3733 | 4:1 | 400 | 467 | 12 | 13 | 2 |
| $0111_B$ | 3733 | 4267 | | 467 | 533 | 13 | 14 | 2 |
| $1000_B$ | 4267 | 4800 | | 533 | 600 | 15 | 16 | 3 |
| $1001_B$ | 4800 | 5500 | | 600 | 688 | 17 | 18 | 4 |
| $1010_B$ | 5500 | 6000 | | 688 | 750 | 18 | 20 | 4 |
| $1011_B$ | 6000 | 6400 | | 750 | 800 | 19 | 21 | 4 |

NOTE 1 The LPDDR5 SDRAM device should not be operated at a frequency above the upper frequency limit, or below the lower frequency limit, shown for each RL, or nRBTP value.

NOTE 2 The programmed value of nRBTP is the number of clock cycles the LPDDR5 SDRAM device uses to determine the starting point of an internal Precharge operation after a Read burst with AP(Auto Precharge). It is determined by RU(tRBTP/tCK).

NOTE 3 RL Set 1 applies when the device is byte-mode.

### 7.4.8.2 Write Latency

Write latency is measured from the rising edge of CK_t that begins the Write command. Latencies are specified separately for the DVFSC Disabled and DVFSC Enabled cases. For each MR1 OP[7:4] setting, device operation at less than the CK lower limit or higher than the CK upper limit is illegal.

### 7.4.8.2 Write Latency (Cont'd)

**Table 198 — Write Latency: DVFSC Disabled**

| MR1 OP[7:4] | WCK:CK Ratio | Data Rate Range [Mbps] | | CK Frequency Range [MHz] | | WL | | Unit |
|---|---|---|---|---|---|---|---|---|
| | | Lower Limit (>) | Upper Limit (≤) | Lower Limit (>) | Upper Limit (≤) | Set A | Set B | |
| 0000 | 2:1 | 40 | 533 | 10 | 133 | 4 | 4 | nCK |
| 0001 | 2:1 | 533 | 1067 | 133 | 267 | 4 | 6 | nCK |
| 0010 | 2:1 | 1067 | 1600 | 267 | 400 | 6 | 8 | nCK |
| 0011 | 2:1 | 1600 | 2133 | 400 | 533 | 8 | 10 | nCK |
| 0100 | 2:1 | 2133 | 2750 | 533 | 688 | 8 | 14 | nCK |
| 0101 | 2:1 | 2750 | 3200 | 688 | 800 | 10 | 16 | nCK |
| 0000 | 4:1 | 40 | 533 | 5 | 67 | 2 | 2 | nCK |
| 0001 | 4:1 | 533 | 1067 | 67 | 133 | 2 | 3 | nCK |
| 0010 | 4:1 | 1067 | 1600 | 133 | 200 | 3 | 4 | nCK |
| 0011 | 4:1 | 1600 | 2133 | 200 | 267 | 4 | 5 | nCK |
| 0100 | 4:1 | 2133 | 2750 | 267 | 344 | 4 | 7 | nCK |
| 0101 | 4:1 | 2750 | 3200 | 344 | 400 | 5 | 8 | nCK |
| 0110 | 4:1 | 3200 | 3733 | 400 | 467 | 6 | 9 | nCK |
| 0111 | 4:1 | 3733 | 4267 | 467 | 533 | 6 | 11 | nCK |
| 1000 | 4:1 | 4267 | 4800 | 533 | 600 | 7 | 12 | nCK |
| 1001 | 4:1 | 4800 | 5500 | 600 | 688 | 8 | 14 | nCK |
| 1010 | 4:1 | 5500 | 6000 | 688 | 750 | 9 | 15 | nCK |
| 1011 | 4:1 | 6000 | 6400 | 750 | 800 | 9 | 16 | nCK |

NOTE 1 The Write Latency applies both x16 and x8 SDRAM.
NOTE 2 The Write latency applies regardless of the following function setting: (Disable/Enable) Byte Mode, Write DBI, Write Data Copy and Link ECC.
NOTE 3 Write Latency Set "A" and Set "B" is determined by MR3 OP[5]. When MR3 OP[5]=0, then Write Latency Set "A" should be used. When MR3 OP[5]=1, then Write Latency Set "B" should be used.

**Table 199 — Write Latency: DVFSC Enabled**

| MR1 OP[7:4] | WCK:CK Ratio | Data Rate Range [Mbps] | | CK Frequency Range [MHz] | | WL | | Unit |
|---|---|---|---|---|---|---|---|---|
| | | Lower Limit (>) | Upper Limit (≤) | Lower Limit (>) | Upper Limit (≤) | Set A | Set B | |
| 0000 | 2:1 | 40 | 533 | 10 | 133 | 4 | 4 | nCK |
| 0001 | 2:1 | 533 | 1067 | 133 | 267 | 4 | 6 | nCK |
| 0010 | 2:1 | 1067 | 1600 | 267 | 400 | 6 | 8 | nCK |
| 0000 | 4:1 | 40 | 533 | 5 | 67 | 2 | 2 | nCK |
| 0001 | 4:1 | 533 | 1067 | 67 | 133 | 2 | 3 | nCK |
| 0010 | 4:1 | 1067 | 1600 | 133 | 200 | 3 | 4 | nCK |

NOTE 1 The Write Latency applies both x16 and x8 SDRAM.
NOTE 2 The Write latency applies regardless of the following function setting: (Disable/Enable) Byte Mode, Write DBI, Write Data Copy and Link ECC.
NOTE 3 Write Latency Set "A" and Set "B" is determined by MR3 OP[5]. When MR3 OP[5]=0, then Write Latency Set "A" should be used. When MR3 OP[5]=1, then Write Latency Set "B" should be used.

### 7.4.8.2 Write Latency (Cont'd)

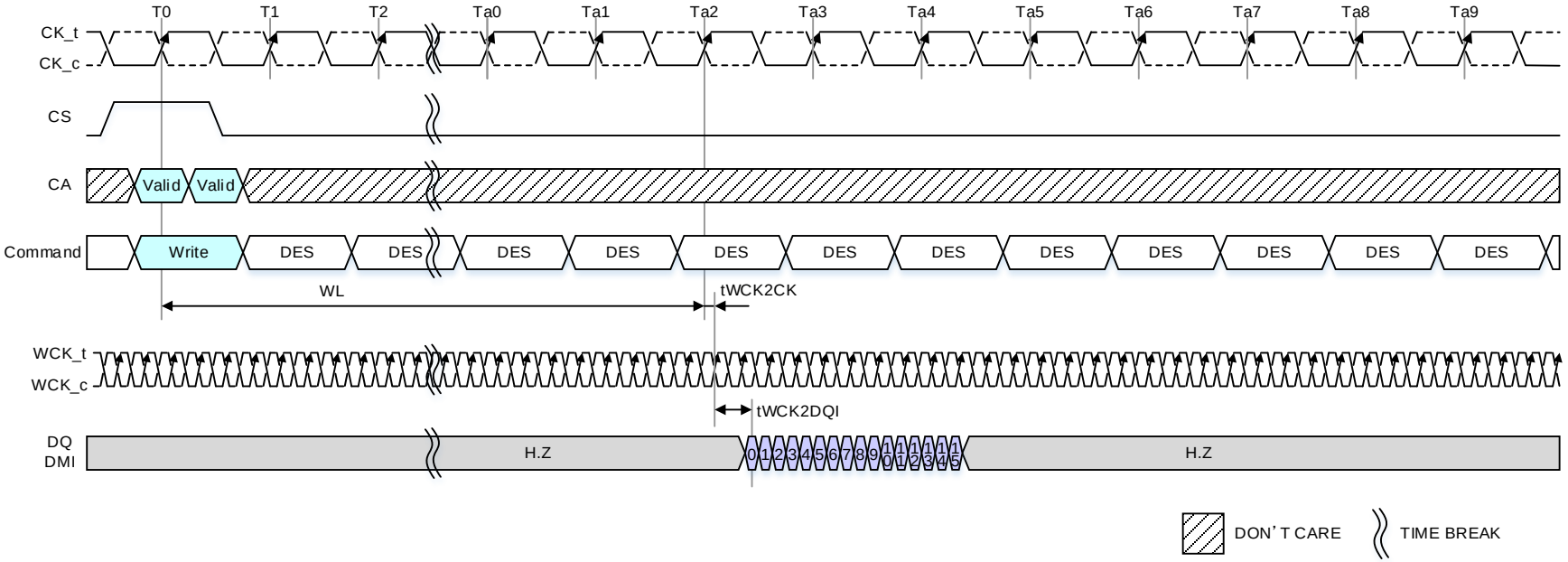


NOTE 1 DES commands are shown for ease of illustration; other commands may be valid at these times.

**Figure 106 — Write Latency Timing**

### 7.4.8.3 Write Recovery time

Write Recovery time (nWR) is measured from the first rising edge of CK_t that occurs after the last latching edge of WCK. For each MR2 OP[7:4] setting, device operation at less than the CK lower limit or higher than the CK upper limit is illegal.

**Table 200 — nWR Latency**

| MR2 OP[7:4] | WCK:CK Ratio | Data Rate Range [Mbps] | | CK Frequency Range [MHz] | | nWR | | | | | | Unit |
|---|---|---|---|---|---|---|---|---|---|---|---|---|
| | | Lower Limit (>) | Upper Limit (≤) | Lower Limit (>) | Upper Limit (≤) | x16 w/o DVFSC w/o Write Link ECC | x8 w/o DVFSC w/o Write Link ECC | x16 w/o DVFSC w Write Link ECC | x8 w/o DVFSC w Write Link ECC | x16 w DVFSC w/o Write Link ECC | x8 w DVFSC w/o Write Link ECC | |
| 0000 | 2:1 | 40 | 533 | 10 | 133 | 5 | 5 | N/A | N/A | 6 | 6 | nCK |
| 0001 | 2:1 | 533 | 1067 | 133 | 267 | 10 | 10 | N/A | N/A | 11 | 12 | nCK |
| 0010 | 2:1 | 1067 | 1600 | 267 | 400 | 14 | 15 | N/A | N/A | 17 | 18 | nCK |
| 0011 | 2:1 | 1600 | 2133 | 400 | 533 | 19 | 20 | N/A | N/A | N/A | N/A | nCK |
| 0100 | 2:1 | 2133 | 2750 | 533 | 688 | 24 | 25 | N/A | N/A | N/A | N/A | nCK |
| 0101 | 2:1 | 2750 | 3200 | 688 | 800 | 28 | 29 | N/A | N/A | N/A | N/A | nCK |
| 0000 | 4:1 | 40 | 533 | 5 | 67 | 3 | 3 | N/A | N/A | 3 | 3 | nCK |
| 0001 | 4:1 | 533 | 1067 | 67 | 133 | 5 | 5 | N/A | N/A | 6 | 6 | nCK |
| 0010 | 4:1 | 1067 | 1600 | 133 | 200 | 7 | 8 | N/A | N/A | 9 | 9 | nCK |
| 0011 | 4:1 | 1600 | 2133 | 200 | 267 | 10 | 10 | N/A | N/A | N/A | N/A | nCK |
| 0100 | 4:1 | 2133 | 2750 | 267 | 344 | 12 | 13 | N/A | N/A | N/A | N/A | nCK |
| 0101 | 4:1 | 2750 | 3200 | 344 | 400 | 14 | 15 | N/A | N/A | N/A | N/A | nCK |
| 0110 | 4:1 | 3200 | 3733 | 400 | 467 | 16 | 17 | 18 | 19 | N/A | N/A | nCK |
| 0111 | 4:1 | 3733 | 4267 | 467 | 533 | 19 | 20 | 21 | 22 | N/A | N/A | nCK |
| 1000 | 4:1 | 4267 | 4800 | 533 | 600 | 21 | 22 | 23 | 24 | N/A | N/A | nCK |
| 1001 | 4:1 | 4800 | 5500 | 600 | 688 | 24 | 25 | 27 | 28 | N/A | N/A | nCK |
| 1010 | 4:1 | 5500 | 6000 | 688 | 750 | 26 | 28 | 29 | 31 | N/A | N/A | nCK |
| 1011 | 4:1 | 6000 | 6400 | 750 | 800 | 28 | 29 | 31 | 32 | N/A | N/A | nCK |

NOTE 1 The LPDDR5 SDRAM should not be operated at a frequency above the Upper Frequency Limit, or below the Lower Frequency Limit, shown for each nWR value.

NOTE 2 The programmed value of nWR is the number of clock cycles the LPDDR5 SDRAM uses to determine the starting point of an internal Precharge operation after a Write burst with AP (Auto Precharge). It is determined by RU(tWR/tCK).

### 7.4.8.3 Write Recovery time (Cont'd)

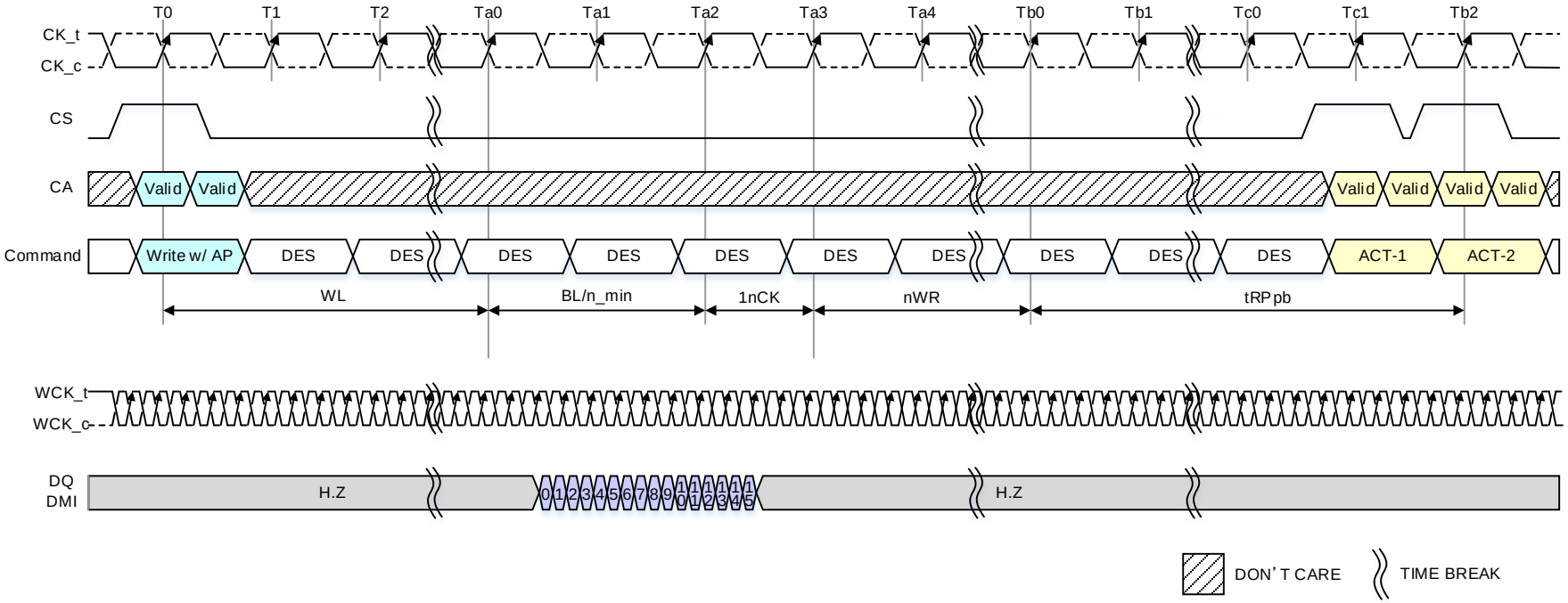


NOTE 1 DES commands are shown for ease of illustration; other commands may be valid at these times.

**Figure 107 — Write Recovery Latency Timing**

### 7.4.9 Masked Write

The LPDDR5 SDRAM requires that Write operations which include a byte mask anywhere in the burst sequence must use the Masked Write command. This allows the DRAM to implement efficient data protection schemes based on larger data blocks. The Masked Write command to the same banks in same bank-group cannot be issued until tCCDMW later, to allow the LPDDR5-SDRAM to finish the internal Read-Modify-Write. One Data Mask-Invert (DMI) pin is provided per byte lane, and the Data Mask-Invert timings match data bit (DQ) timing. See 7.4.10 for more information on the use of the DMI signal. Please refer to 8 for command timing constraints for each bank architecture timing. Table 201 is a description of tCCDMW following CKR and Bank mode.

**Table 201 — tCCDMW**

| WCK:CK Ratio | Bank ORG | WCK frequency | tCCDMW |
|---|---|---|---|
| 2:1 | 16B | ≤1600Mhz | 16*tCK |
| | 8B | ≤1600Mhz | 16*tCK |
| 4:1 | 16B | ≤1600Mhz | 8*tCK |
| | BG Mode | >1600Mhz | 16*tCK |
| | 8B | Any freq. | 16*tCK |

### 7.4.9 Masked Write (Cont'd)

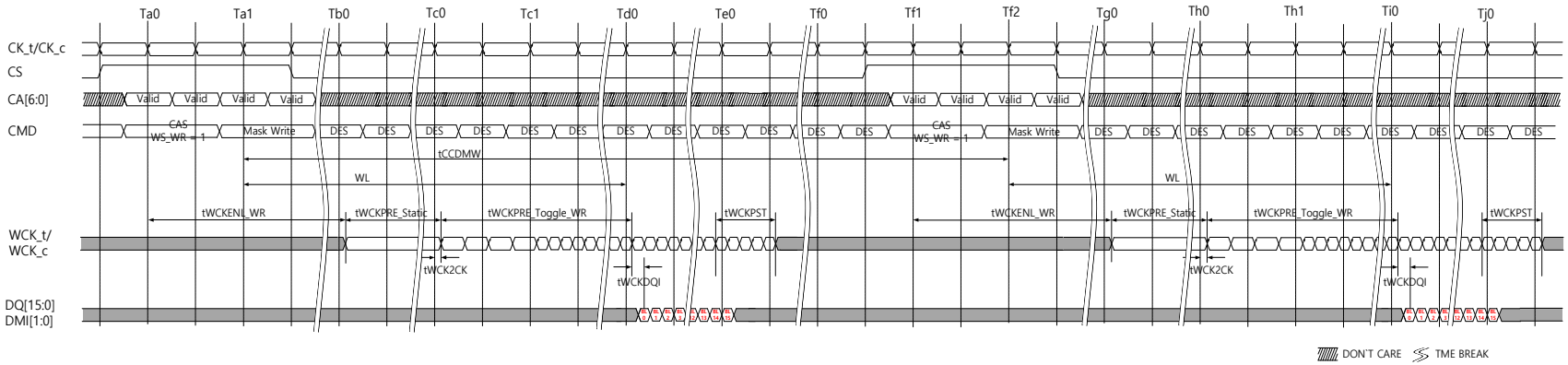


NOTE 1 Masked Write command is only BL=16 in 4Bank/4BG or 16 Bank mode.
NOTE 2 In order to issue another Masked Write command to same bank without any other commands in between, new WCK2CK synchronization process may be required when tCCDMW > WL + BL/n_max if DRAM is not in WCK free running mode.
NOTE 3 tCCDMW = 16 × tCK (4×tCCD_L) in 4Bank 4BG mode, and 8 × tCK (4×tCCD) in 16 bank mode.
NOTE 4 DES commands are shown for ease of illustration; other commands may be valid at these times.

**Figure 108 — Masked Write Command – Same Bank Operation Timing without any other DQ operation commands in 4Bank/4BG or 16Bank mode**

### 7.4.9 Masked Write (Cont'd)

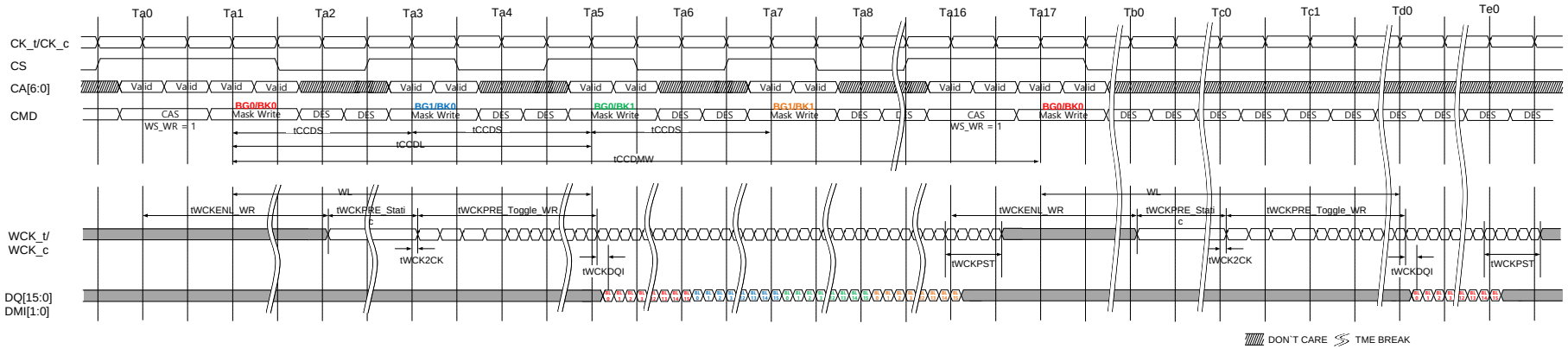


NOTE 1 Masked Write command is only BL=16 in 4Bank/4BG.
NOTE 2 Masked Write command for different bank groups can be issued every after tCCD_S(2 × tCK).
NOTE 3 Masked Write command for different bank in same bank group can be issued every after tCCD_L(4 × tCK).
NOTE 4 Masked Write command for same bank in same bank group must be issued after tCCDMW (16 × tCK).
NOTE 5 DES commands are shown for ease of illustration; other commands may be valid at these times

**Figure 109 — Masked Write Command – Different Bank Group Operation Timing in 4Bank/4BG mode**

### 7.4.9 Masked Write (Cont'd)

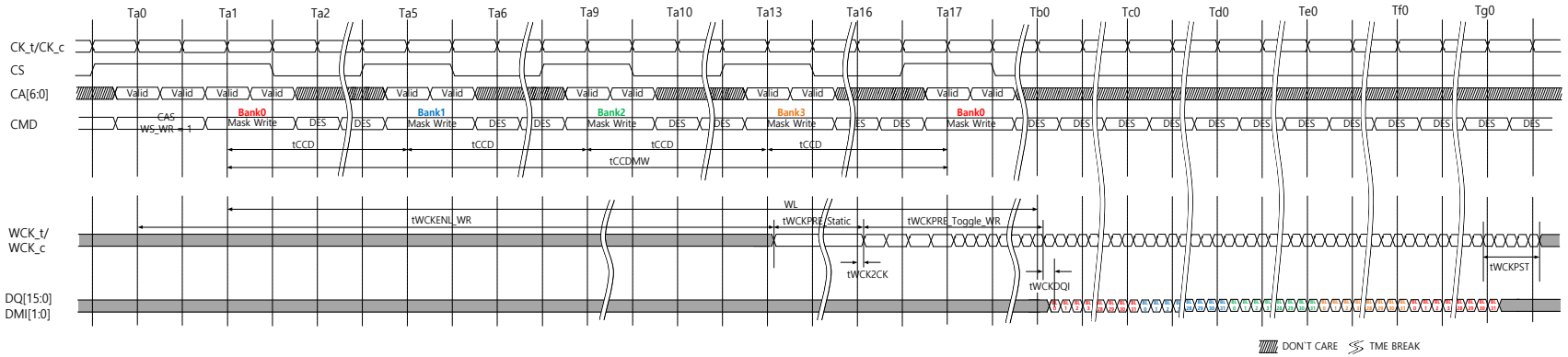


NOTE 1 Masked Write command is only BL=32 in 8 bank mode.
NOTE 2 Masked Write command for different bank can be issued every after tCCD(4 × tCK).
NOTE 3 Masked Write command for same bank must be issued after tCCDMW (16 × tCK).
NOTE 4 DES commands are shown for ease of illustration; other commands may be valid at these times.

**Figure 110 — Masked Write Command – Different Bank Operation Timing in 8-Bank Mode (BL32 only)**

### 7.4.9 Masked Write (Cont'd)

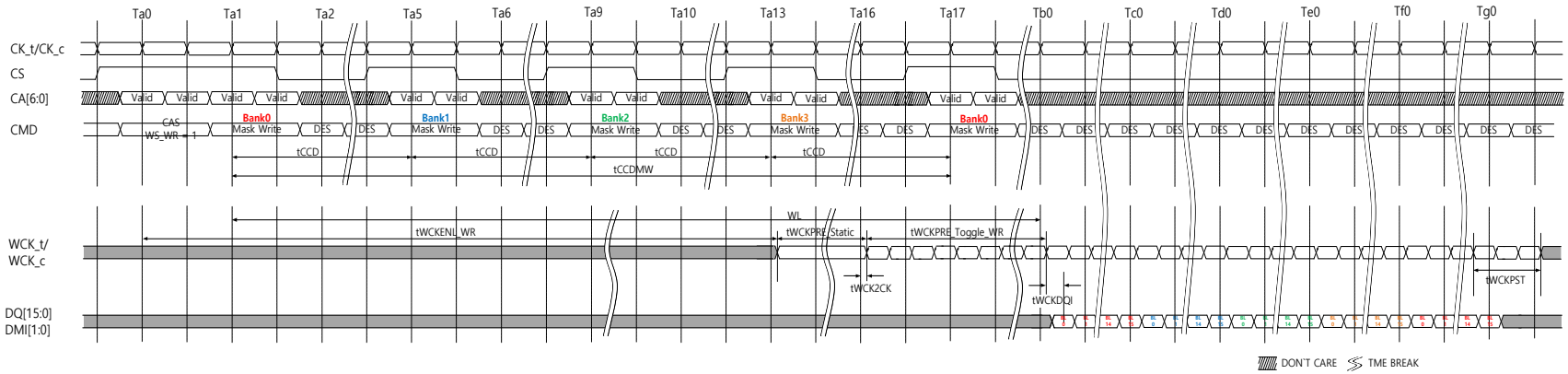


NOTE 1 Masked Write command is only BL=16 in 16 bank mode.
NOTE 2 Masked Write command for different bank can be issued every after tCCD(4 × tCK) (CKR=2:1).
NOTE 3 Masked Write command for same bank must be issued after tCCDMW (16 × tCK) (CKR=2:1).
NOTE 4 DES commands are shown for ease of illustration; other commands may be valid at these time.

**Figure 111 — Masked Write Command – 16 Bank Mode (WCK:CK = 2:1)**

### 7.4.10 Data Mask (DM) and Data Bus Inversion (DBI-DC) Function

LPDDR5 SDRAM supports the function of Data Mask and Data Bus inversion. Its details are shown below.

- LPDDR5 device supports Data Mask (DM) function for Write operation.
- LPDDR5 device supports Data Bus Inversion (DBI-DC) function for Write and Read operation.
- LPDDR5 supports DM and DBI-DC function with a byte granularity.
- DBI-DC function during Write or Masked Write can be enabled or disabled through MR3 OP[7].
- DBI-DC function during Read can be enabled or disabled through MR3 OP[6].
- DM function during Masked Write can be enabled or disabled through MR13 OP[5].
- LPDDR5 device has one Data Mask Inversion (DMI) signal pin per byte; total of 2 DMI signals per channel.
- DMI signal is a bi-directional DDR signal and is sampled along with the DQ signals for Read and Write or Masked Write operation.

DMI is also used input/output pin for Read Link ECC, Write Link ECC and Read Data Copy Function. The DMI behavior by each MR setting such as DM, DBI, Link ECC and Data Copy is described in following tables.

### 7.4.10.1 DMI Pin Behavior with Write Related Commands

**Table 202 - DMI pin behavior by command and support function setting for Write Related Commands**

| Function | | | | DMI Input Behavior | | | |
|---|---|---|---|---|---|---|---|
| Data Mask MR13 OP[5] | Write DBI MR3 OP[7] | Write Link ECC MR22 OP[4:5] | Write Data Copy MR21 OP[4] | Write CMD | Masked Write CMD | Write FIFO CMD | Write CMD at RD/WR-based WCK-RDQS_t Training Mode |
| Disable | Disable | Disable | Disable | Receiver is turned off | Prohibited setting | Follows FIFO Definition | Receiver is turned off |
| Disable | Disable | Disable | Enable | Receiver is turned off | Prohibited setting | Follows FIFO Definition | Receiver is turned off |
| Disable | Disable | Enable | Disable | Receiver is turned off | Prohibited setting | Follows FIFO Definition | Receiver is turned off |
| Disable | Disable | Enable | Enable | Receiver is turned off | Prohibited setting | Follows FIFO Definition | Receiver is turned off |
| Disable | Enable | Disable | Disable | DBI data input | Prohibited setting | Follows FIFO Definition | Receiver is turned off |
| Disable | Enable | Disable | Enable | Fixed low input when DC hit or DBI data input when DC miss | Prohibited setting | Follows FIFO Definition | Receiver is turned off |
| Disable | Enable | Enable | Disable | DBI data input | Prohibited setting | Follows FIFO Definition | Receiver is turned off |
| Disable | Enable | Enable | Enable | Fixed low input when DC hit or DBI data input when DC miss | Prohibited setting | Follows FIFO Definition | Receiver is turned off |
| Enable | Disable | Disable | Disable | Fixed low input | DM data input | Follows FIFO Definition | Receiver is turned off |
| Enable | Disable | Disable | Enable | Fixed low input | DM data input | Follows FIFO Definition | Receiver is turned off |
| Enable | Disable | Enable | Disable | Fixed low input | DM data input | Follows FIFO Definition | Receiver is turned off |
| Enable | Disable | Enable | Enable | Fixed low input | DM data input | Follows FIFO Definition | Receiver is turned off |
| Enable | Enable | Disable | Disable | DBI data input | DM & DBI data input | Follows FIFO Definition | Receiver is turned off |
| Enable | Enable | Disable | Enable | Fixed low input when DC hit or DBI data input when DC miss | DM & DBI data input | Follows FIFO Definition | Receiver is turned off |
| Enable | Enable | Enable | Disable | DBI data input | DM & DBI data input | Follows FIFO Definition | Receiver is turned off |
| Enable | Enable | Enable | Enable | Fixed low input when DC hit or DBI data input when DC miss | DM & DBI data input | Follows FIFO Definition | Receiver is turned off |

NOTE 1 Explanation of terminology in the cells.
- Receiver is turned off: The input level is shown in "don't" care in the timing diagram.

- Fixed low input: The input level is fixed to LOW.
- Follows FIFO Definition: DMI pin behavior follows WCK-DQ (FIFO) training definition. Data Mask, Write DBI and/or Write Link ECC functions are disabled regardless of MR setting. See WCK-DQ section for detail.
- Prohibited setting: Corresponding command issuing is prohibited in this mode register setting or enabling these functions are prohibited at the same time.
- Valid data input: High or low input is required. These data are not required to have any meaning.
- DBI data input: DMI signal is treated as DBI signal and it indicates whether SDRAM needs to invert the Write data received on DQs within a byte. The LPDDR5 SDRAM inverts Write data received on the DQ inputs in case DMI was sampled HIGH, or leaves the Write data non-inverted in case DMI was sampled LOW. Total count of '1' data bits on DQ[2:7] or DQ[10:15] (for Lower Byte or Upper Byte respectively), the Write data received on the DQ inputs, should less than or equal to four during Write DBI is enabled.
- DM data input: The LPDDR5 SDRAM requires an explicit Masked Write command for all masked write operations. DMI signal is treated as DM signal and it indicates which bit time within the burst is to be masked. When DMI signal is HIGH, SDRAM masks that bit time across all DQs associated within a byte. All DQ input signals within a byte are don't care (either HIGH or LOW) when DMI signal is HIGH. When DMI signal is LOW, the LPDDR5 SDRAM does not perform mask operation and data received on DQ input is written to the array.
- DM & DBI data input: The LPDDR5 SDRAM requires an explicit Masked Write command for all masked write operations. The LPDDR5 SDRAM masks the Write data received on the DQ inputs if the total count of '1' data bits on DQ[2:7] or DQ[10:15] (for Lower Byte or Upper Byte respectively) is equal to or greater than five and DMI signal is LOW. Otherwise the LPDDR5 DRAM does not perform mask operation and treats it as a legal DBI pattern; DMI signal is treated as DBI signal and data received on DQ input is written to the array.

NOTE 2 When both DM and Write Data copy is enabled, the low level is required to be to input to DMI when Write with Data Copy command is issued regardless Data Copy (DC) miss/hit selection.

NOTE 3 Masked Write Command is not allowed and is considered an illegal cmmand as DM function is disabled.

### 7.4.10.2 DMI Pin Behavior with Read and MRR Commands

**Table 203 - DMI pin behavior by command and support function setting for Read and MRR commands**

| Function | | | DMI Output Behavior | | |
|---|---|---|---|---|---|
| Read DBI MR3 OP[6] | Read Link ECC MR22 OP[7:6] | Read Data Copy MR21 OP[5] | Read | Mode Register Read | Read CMD at RD/WR-based WCK-RDQS_t Training Mode |
| Disable | Disable | Disable | Driver is turned off | Driver is turned off | Driver is turned off |
| Disable | Disable | Enable | Follows Data Copy Definition | Valid data output | Follows Data Copy Definition |
| Disable | Enable | Disable | Follows Link ECC Definition | Valid data output | Follows Link ECC Definition |
| Disable | Enable | Enable | Prohibited setting | Prohibited setting | Prohibited setting |
| Enable | Disable | Disable | DBI data output | Fixed low output | DBI data output |
| Enable | Disable | Enable | Follows Data Copy Definition | Fixed low output | Follows Data Copy Definition |
| Enable | Enable | Disable | Prohibited setting | Prohibited setting | Prohibited setting |
| Enable | Enable | Enable | Prohibited setting | Prohibited setting | Prohibited setting |

NOTE 1 Explanation of terminology in the cells.

- Follows Data Copy Definition: DMI pin behavior follows Data Copy definition. See Data Copy section for detail.
- Follows Link ECC Definition: DMI pin behavior follows Link ECC definition. See Link ECC section for detail.
- Prohibited setting: Corresponding command issuing is prohibited in this mode register setting or enabling these functions are prohibited at the same time.
- Valid data output: High or low data is outputted. And these output data are meaningless.
- Fixed low output: The output level is fixed to LOW.
- DBI data output: The LPDDR5 SDRAM inverts Read data on its DQ outputs associated within a byte and drives DMI signal HIGH when the number of '1' data bits within a given byte lane is greater than four; otherwise the SDRAM does not invert the read data and drives DMI signal LOW.

### 7.4.10.3 DMI Pin Behavior with Read FIFO and Read DQ Calibration Commands

MR0 OP[4] indicates whether DMI output behavior control is supported or not. If MR0 OP[4]=$1_B$, DMI input/output behavior control mode can be selected MR13 OP[4].

- MR0 OP[4]=$0_B$
  Only mode 1 is supported.
- MR0 OP[4]=$1_B$
  Mode 1 and Mode 2 can be selectable.

The outline of Mode 1 and Mode 2.

- Mode1: MR13 OP[4]=$0_B$
  DMI Output behavior follows MR setting Read DBI, Read Link ECC and Read Data Copy.
- Mode 2: MR13 OP[4]=$1_B$
  DMI outputs a valid data, if Read FIFO Command and Read DQ Calibration Command is issued when Data Mask and/or Write DBI are enabled even though Read DBI, Read Link ECC and Read Data Copy are disabled.

**Table 204 - DMI pin behavior by command and support function setting for RFF and RDC Command**

| Function | | | | | | DMI Output Behavior | |
|---|---|---|---|---|---|---|---|
| DMI Output Control MR13 OP[4] | Data Mask MR13 OP[5] | Write DBI MR3 OP[7] | Read DBI MR3 OP[6] | Read Link ECC MR22 OP[7:6] | Read Data Copy MR21 OP[5] | Read FIFO | Read DQ Calibration |
| Mode 1 | Don't care | Don't care | Disable | Disable | Disable | Follows FIFO Definition | Driver is turned off |
| Mode 1 | Don't care | Don't care | Disable | Disable | Enable | Follows FIFO Definition | Follows RDC Definition |
| Mode 1 | Don't care | Don't care | Disable | Enable | Disable | Follows FIFO Definition | Follows RDC Definition |
| Mode 1 | Don't care | Don't care | Disable | Enable | Enable | Prohibited setting | Prohibited setting |
| Mode 1 | Don't care | Don't care | Enable | Disable | Disable | Follows FIFO Definition | Follows RDC Definition |
| Mode 1 | Don't care | Don't care | Enable | Disable | Enable | Follows FIFO Definition | Follows RDC Definition |
| Mode 1 | Don't care | Don't care | Enable | Enable | Disable | Prohibited setting | Prohibited setting |
| Mode 1 | Don't care | Don't care | Enable | Enable | Enable | Prohibited setting | Prohibited setting |
| Mode 2 | Disable | Disable | Disable | Disable | Disable | Follows FIFO Definition | Driver is turned off |
| Mode 2 | Disable | Enable | Disable | Disable | Disable | Follows FIFO Definition | Follows RDC Definition |
| Mode 2 | Enable | Disable | Disable | Disable | Disable | Follows FIFO Definition | Follows RDC Definition |
| Mode 2 | Enable | Enable | Disable | Disable | Disable | Follows FIFO Definition | Follows RDC Definition |
| Mode 2 | Don't care | Don't care | Disable | Disable | Enable | Follows FIFO Definition | Follows RDC Definition |
| Mode 2 | Don't care | Don't care | Disable | Enable | Disable | Follows FIFO Definition | Follows RDC Definition |
| Mode 2 | Don't care | Don't care | Disable | Enable | Enable | Prohibited setting | Prohibited setting |
| Mode 2 | Don't care | Don't care | Enable | Disable | Disable | Follows FIFO Definition | Follows RDC Definition |
| Mode 2 | Don't care | Don't care | Enable | Disable | Enable | Follows FIFO Definition | Follows RDC Definition |
| Mode 2 | Don't care | Don't care | Enable | Enable | Disable | Prohibited setting | Prohibited setting |
| Mode 2 | Don't care | Don't care | Enable | Enable | Enable | Prohibited setting | Prohibited setting |

NOTE 1 Explanation of terminology in the cells.

- Follows FIFO Definition: DMI pin behavior follows WCK-DQ (FIFO) training definition. Read DBI, Read Link ECC and/or Read Data Copy functions are disabled regardless of MR setting. See WCK-DQ Training (FIFO Training) section for detail.
- Follows RDC Definition: DMI pin behavior follows RDC definition. Read DBI, Read Link ECC and/or Read Data Copy functions are disabled regardless of MR setting. See RDC section for detail.
- Prohibited setting: Corresponding command issuing is prohibited in this mode register setting or enabling these functions are prohibited at the same time.

## 7.5 Refresh operation

### 7.5.1 Refresh command

The REFRESH command is initiated with CS HIGH, CA[2:0] LOW, CA[5:3] HIGH, CA6 LOW at the rising edge of the clock. Per-bank REFRESH is initiated with CA6 LOW at the falling edge of the clock. All-bank REFRESH is initiated with CA6 HIGH at the falling edge of the clock.

A per-bank REFRESH command (REFpb) is performed to the bank address as transferred on CA0, CA1, and CA2 at the falling edge of the clock. Bank address BA0 is transferred on CA0, bank address BA1 is transferred on CA1 and Bank address BA2 is transferred on CA2. Bank address BA3 is transferred on CA3 additionally “don’t care” for 4bank/4BG and 16bank mode, and then per-bank REFRESH is performed to 2 banks simultaneously.

Example for 4Bank/4BG mode or 16Bank mode - A per-bank REFRESH command (REFpb) to the 16 banks can be issued in any order. e.g., REFpb commands may be issued in the following order: (1,9)-(5,13)-(0,8)-(2,10)-(6,14)-(7,15)-(3,11)-(4,12). After the 16 banks have been refreshed using the per-bank REFRESH command the controller can send another set of per-bank REFRESH commands in the same order or a different order. e.g., REFpb commands are issued in the following order that is different from the previous order: (7,15)-(3,11)-(2,10)-(4,12)-(6,14)-(0,8)-(1,9)-(5,13). One of the possible order can also be a sequential round robin: (0,8)-(1,9)-(2,10)-(3,11)-(4,12)-(5,13)-(6,14)-(7,15). It is illegal to send a per-bank REFRESH command to the same bank unless all 16 banks have been refreshed using the per-bank REFRESH command. The count of 8 REFpb commands starts with the first REFpb command after a synchronization event.

Example for 8Bank mode - A per-bank REFRESH command (REFpb) to the 8-Banks can be issued in any order. e.g., REFpb commands may be issued in the following order: 1-0-2-7-6-3-4-5. After the 8-Banks have been refreshed using the per-bank REFRESH command the controller can send another set of per-bank REFRESH commands in the same order or a different order. e.g., REFpb commands are issued in the following order that is different from the previous order: 7-3-4-2-6-0-1-5. One of the possible order can also be a sequential round robin: 0-1-2-3-4-5-6-7. It is illegal to send a per-bank REFRESH command to the same bank unless all 8-Banks have been refreshed using the per-bank REFRESH command. The count of 8 REFpb commands starts with the first REFpb command after a synchronization event.

The bank count is synchronized between the controller and the SDRAM by resetting the bank count to zero. Synchronization can occur upon issuing a RESET_n or at every exit from self-refresh. REFab command also synchronizes the counter between the controller and SDRAM to zero. The SDRAM device can be placed in self-refresh or a REFab command can be issued at any time without cycling through all banks using per-bank REFRESH command. After the bank count is synchronized to zero, the controller can issue per-bank REFRESH commands in any order as described in the previous paragraph.

A REFab command issued when the bank counter is not zero will reset the bank counter to zero and the DRAM will perform refreshes to all banks as indicated by the row counter. If another refresh command (REFab or REFpb) is issued after the REFab command, then it uses an incremented value of the row counter. Table 205 for 4bank/4BG mode or 16Bank mode, Table 206 for 8bank mode show examples of both bank and refresh counter increment behavior.

### 7.5.1 Refresh command (Cont'd)

**Table 205 — Bank and Refresh counter increment behavior on the 4Bank/4BG mode or 16Bank mode**

| # | SUB # | Command | BG1 | BG0 | BA1 | BA0 | Refresh Bank # | Bank Counter # | Ref Counter # (Row Address #) |
|---|---|---|---|---|---|---|---|---|---|
| 0 | 0 | **Reset, SRX or REFab** | | | | | | To 0 | |
| 1 | 1 | REFpb | X | 0 | 0 | 0 | 0/8 | 0 to 1 | n |
| 2 | 2 | REFpb | X | 0 | 0 | 1 | 1/9 | 1 to 2 | |
| 3 | 3 | REFpb | X | 0 | 1 | 0 | 2/10 | 2 to 3 | |
| 4 | 4 | REFpb | X | 0 | 1 | 1 | 3/11 | 3 to 4 | |
| 5 | 5 | REFpb | X | 1 | 0 | 0 | 4/12 | 4 to 5 | |
| 6 | 6 | REFpb | X | 1 | 0 | 1 | 5/13 | 5 to 6 | |
| 7 | 7 | REFpb | X | 1 | 1 | 0 | 6/14 | 6 to 7 | |
| 8 | 8 | REFpb | X | 1 | 1 | 1 | 7/15 | 7 to 0 | |
| 9 | 1 | REFpb | X | 1 | 1 | 0 | 6/14 | 0 to 1 | n+1 |
| 10 | 2 | REFpb | X | 1 | 1 | 1 | 7/15 | 1 to 2 | |
| • • • | | | | | | | | | |
| 15 | 7 | REFpb | X | 0 | 0 | 0 | 0/8 | 6 to 7 | |
| 16 | 8 | REFpb | X | 1 | 0 | 0 | 4/12 | 7 to 0 | |
| 17 | 1 | REFpb | X | 0 | 0 | 0 | 0/8 | 0 to 1 | n+2 |
| 18 | 2 | REFpb | X | 0 | 0 | 1 | 1/9 | 1 to 2 | |
| 19 | 3 | REFpb | X | 0 | 1 | 0 | 2/10 | 2 to 3 | |
| **20** | **0** | **REFab** | **V** | **V** | **V** | **V** | **0~15** | **To 0** | **n+2** |
| 21 | 1 | REFpb | X | 0 | 1 | 0 | 2/10 | 0 to 1 | n+3 |
| 22 | 2 | REFpb | X | 1 | 0 | 1 | 5/13 | 1 to 2 | |
| Snip | | | | | | | | | |

### 7.5.1 Refresh command (Cont'd)

**Table 206 — Bank and Refresh counter increment behavior on the 8bank mode**

| # | SUB # | Command | BA2 | BA1 | BA0 | Refresh Bank # | Bank Counter # | Ref Counter # (Row Address #) |
|---|---|---|---|---|---|---|---|---|
| 0 | 0 | **Reset, SRX or REFab** | | | | | To 0 | |
| 1 | 1 | REFpb | 0 | 0 | 0 | 0 | 0 to 1 | n |
| 2 | 2 | REFpb | 0 | 0 | 1 | 1 | 1 to 2 | |
| 3 | 3 | REFpb | 0 | 1 | 0 | 2 | 2 to 3 | |
| 4 | 4 | REFpb | 0 | 1 | 1 | 3 | 3 to 4 | |
| 5 | 5 | REFpb | 1 | 0 | 0 | 4 | 4 to 5 | |
| 6 | 6 | REFpb | 1 | 0 | 1 | 5 | 5 to 6 | |
| 7 | 7 | REFpb | 1 | 1 | 0 | 6 | 6 to 7 | |
| 8 | 8 | REFpb | 1 | 1 | 1 | 7 | 7 to 0 | |
| 9 | 1 | REFpb | 1 | 1 | 0 | 6 | 0 to 1 | n+1 |
| 10 | 2 | REFpb | 1 | 1 | 1 | 7 | 1 to 2 | |
| | | • | | | | | | |
| | | • | | | | | | |
| | | • | | | | | | |
| 15 | 7 | REFpb | 0 | 0 | 0 | 0 | 6 to 7 | |
| 16 | 8 | REFpb | 1 | 0 | 0 | 4 | 7 to 0 | |
| 17 | 1 | REFpb | 0 | 0 | 0 | 0 | 0 to 1 | n+2 |
| 18 | 2 | REFpb | 0 | 0 | 1 | 1 | 1 to 2 | |
| 19 | 3 | REFpb | 0 | 1 | 0 | 2 | 2 to 3 | |
| **20** | **0** | **REFab** | **V** | **V** | **V** | **0~7** | **To 0** | **n+2** |
| 21 | 1 | REFpb | 0 | 1 | 0 | 2 | 0 to 1 | n+3 |
| 22 | 2 | REFpb | 1 | 0 | 1 | 5 | 1 to 2 | |
| Snip | | | | | | | | |

A bank must be idle before it can be refreshed. The controller must track the bank(or bank pair in the case of BG mode and 16bank mode) being refreshed by the per-bank REFRESH command.
The REFpb command must not be issued to the device until the following conditions are met:

- tRFCab has been satisfied after the prior REFab command.
- tpbR2pbR has been satisfied after the prior REFpb command.
- tRP has been satisfied after the prior PRECHARGE command to that bank.
- tRRD has been satisfied after the prior ACTIVATE command (if applicable, for example after activating a row in a different bank than the one affected by the REFpb command).

The target bank or bank pair is inaccessible during per-bank REFRESH cycle time (tRFCpb), however, other banks not being refreshed within the device are accessible and can be addressed during the cycle. During the REFpb operation, any of the non-refreshing banks can be maintained in an active state or accessed by a READ or a WRITE command. When the per-bank REFRESH cycle has completed, the affected bank or bank pair will be in the idle state.

### 7.5.1 Refresh command (Cont'd)

After issuing REFpb, these conditions must be met:

- tRFCpb must be satisfied before issuing a REFab command.
- tRFCpb must be satisfied before issuing an ACTIVATE command to the same bank or bank pair.
- tpbr2act must be satisfied before issuing an ACTIVATE command to a different non-refreshing bank.
- tpbR2pbR must be satisfied before issuing another REFpb command.

An all-bank REFRESH command (REFab) issues a REFRESH command to all banks. All banks must be idle when REFab is issued (for instance, by issuing a PRECHARGE-ALL command prior to issuing an all-bank REFRESH command). REFab also synchronizes the bank count between the controller and the SDRAM to zero. The REFab command must not be issued to the device until the following conditions have been met:

- tRFCab has been satisfied following the prior REFab command.
- tRFCpb has been satisfied following the prior REFpb command.
- tRP has been satisfied following the prior PRECHARGE command.

When an all-bank refresh cycle has completed, all banks will be idle. After issuing REFab:

- tRFCab latency must be satisfied before issuing an ACTIVATE command.
- tRFCab latency must be satisfied before issuing a REFab or REFpb command.

**Table 207 — REFRESH Command Scheduling Separation requirements for 4Bank /4BG mode or 16Bank mode**

| Symbol | Minimum Delay From | To | Note |
|---|---|---|---|
| tRFCab | REFab | REFab | |
| | | Activate command to any bank | |
| | | REFpb | |
| tRFCpb | REFpb | REFab | |
| | | Activate command to same bank as REFpb | |
| tpbr2act | REFpb | Activate command to different bank than REFpb | |
| tRRD_S | Activate | REFpb to different bank group than prior Activate command | 1 |
| | | Activate command to different bank group than prior Activate command | |
| tRRD_L | Activate | REFpb in same bank group | 1 |
| | | Activate command to different bank than prior Activate command in same bank group | |
| tpbR2pbR | REFpb | REFpb | |

NOTE A bank must be in the idle state before it is refreshed, so following an ACTIVATE command REFab is prohibited; REFpb is supported only if it affects a bank that is in the idle state.

### 7.5.1 Refresh command (Cont'd)

**Table 208 — REFRESH Command Scheduling Separation requirements for 8Bank mode**

| Symbol | Minimum Delay From | To | Note |
|---|---|---|---|
| tRFCab | REFab | REFab | |
| | | Activate command to any bank | |
| | | REFpb | |
| tRFCpb | REFpb | REFab | |
| | | Activate command to same bank as REFpb | |
| tpbr2act | REFpb | Activate command to different bank than REFpb | |
| tRRD | REFpb | Activate command to different bank than REFpb | |
| | Activate | REFpb | 1 |
| | | Activate command to different bank than prior Activate command | |
| tpbR2pbR | REFpb | REFpb | |

NOTE A bank must be in the idle state before it is refreshed, so following an ACTIVATE command REFab is prohibited; REFpb is supported only if it affects a bank that is in the idle state.

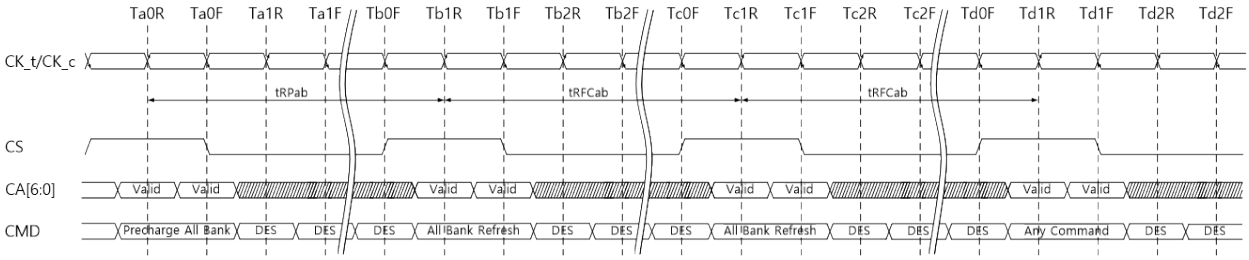


NOTES - 1. Only DES, NOP, PDE, MRR, MRW, MPC, RFF, and WFF commands allowed after Refresh command registered until tRFCab(min) expiress.

**Figure 112 — All-Bank Refresh Operation**

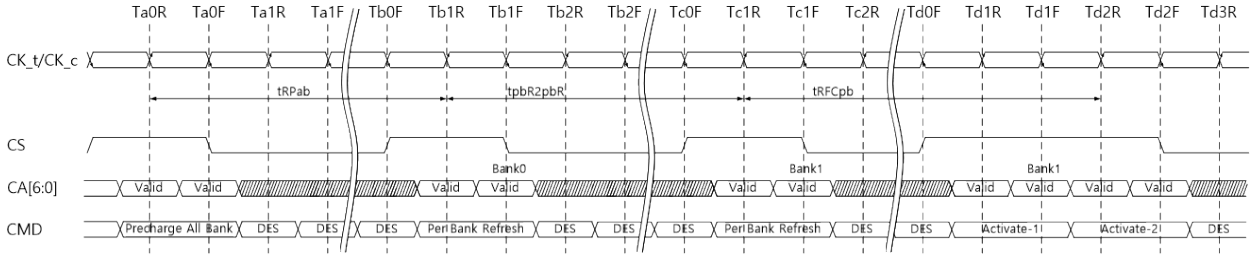


NOTES - 1. In the beginning of this example, the REFpb bank is pointing to bank 0.
2. Operations to banks other than the bank being refreshed are supported during the tRFCpb period.
3. Only DES, NOP, PDE, MRR, MRW, MPC, RFF, and WFF commands allowed after Refresh command registered until tRFCpb(min) expires.

**Figure 113 — Per-Bank Refresh Operation**

### 7.5.1 Refresh command (Cont'd)

In general, a Refresh command needs to be issued to the LPDDR5 SDRAM regularly every tREFi interval. To allow for improved efficiency in scheduling and switching between tasks, some flexibility in the absolute refresh interval is provided. A maximum of 8 Refresh commands can be postponed during operation of the LPDDR5 SDRAM, meaning that at no point in time more than a total of 8 Refresh commands are allowed to be postponed and maximum number of pulled-in or postponed REF command is dependent on refresh rate. It is described in Tabl 192.
In case that 8 Refresh commands are postponed in a row, the resulting maximum interval between the surrounding Refresh commands is limited to 9 x tREFi. A maximum of 8 additional Refresh commands can be issued in advance ("pulled in"), with each one reducing the number of regular Refresh commands required later by one. Note that pulling in more than 8 Refresh commands in advance does not further reduce the number of regular Refresh commands required later, so that the resulting maximum interval between two surrounding Refresh commands is limited to 9 x tREFi. At any given time, a maximum of 16 REF commands can be issued within 2 x tREFi. Self-Refresh Mode may be entered with a maximum of 8 Refresh commands being postponed. After exiting Self-Refresh Mode with one or more Refresh commands postponed, additional Refresh commands may be postponed to the extent that the total number of postponed Refresh commands ( before and after the Self-Refresh ) will never exceed 8. During Self-Refresh Mode, the number of postponed or pulled-in REF commands does not change.

### 7.5.1 Refresh command (Cont'd)

**Table 209 - REFRESH Command Timing Constraints**

| MR4 OP[4:0] | Maximum Refresh Multiplier | Effective Refresh Interval tREFIe | Max. No. of pulled-in or postponed REFab | Max. Interval between two REFab | Max Number of REFab in a 'burst' | 'Burst' Interval Definition | Per-bank Refresh |
|---|---|---|---|---|---|---|---|
| 00000B | Low temp. Limit | N/A | N/A | N/A | N/A | N/A | N/A |
| 00001B | 8 x | 8x tREFI | 1 | 2 x tREFIe | 16 | 2 x tREFI | 1/8 of REFab |
| 00010B | 6 x | 6 x tRFFI | 1 | 2 x tREFIe | 16 | 2 x tREFI | 1/8 of REFab |
| 00011B | 4 x | 4 x tREFI | 2 | 3 x tREFIe | 16 | 2 x tREFI | 1/8 of REFab |
| 00100B | 3.3 x | 3.3 x tREFI | 2 | 3 x tREFIe | 16 | 2 x tREFI | 1/8 of REFab |
| 00101B | 2.5 x | 2.5 x tREFI | 3 | 4 x tREFIe | 16 | 2 x tREFI | 1/8 of REFab |
| 00110B | 2.0 x | 2.0 x tREFI | 4 | 5 x tREFIe | 16 | 2 x tREFI | 1/8 of REFab |
| 00111B | 1.7 x | 1.7 x tREFI | 5 | 6 x tREFIe | 16 | 2 x tREFI | 1/8 of REFab |
| 01000B | 1.3 x | 1.3 x tREFI | 6 | 7 x tREFIe | 16 | 2 x tREFI | 1/8 of REFab |
| 01001B | 1 x | 1 x tREFI | 8 | 9 x tREFIe | 16 | 2 x tREFI | 1/8 of REFab |
| 01010B | 0.7 x | 0.7 x tREFI | 8 | 9 x tREFIe | 16 | max(2xtREFIe, 16xtRFCab) | 1/8 of REFab |
| 01011B | 0.5 x | 0.5 x tREFI | 8 | 9 x tREFIe | 16 | max(2xtREFIe, 16xtRFCab) | 1/8 of REFab |
| 01100B | 0.25 x, no de-rating | 0.25 x tREFI, no de-rating | 8 | 9 x tREFIe | 16 | max(2xtREFIe, 16xtRFCab) | 1/8 of REFab |
| 01101B | 0.25 x, with de-rating | 0.25 x tREFI, with de-rating | 8 | 9 x tREFIe | 16 | max(2xtREFIe, 16xtRFCab) | 1/8 of REFab |
| 01110B | 0.125 x, no de-rating | 0.125 x tREFI, no de-rating | 8 | 9 x tREFIe | 16 | max(2xtREFIe, 16xtRFCab) | 1/8 of REFab |
| 01111B | 0.125 x, with de-rating | 0.125 x tREFI, with de-rating | 8 | 9 x tREFIe | 16 | max(2xtREFIe, 16xtRFCab) | 1/8 of REFab |
| 11111B | SDRAM High temperature operating limit exceeded | N/A | N/A | N/A | N/A | N/A | N/A |

NOTE1 For any thermal transition phase where Refresh mode is transitioned, DRAM will support the previous postponed refresh requirement provided the number of postponed refreshes is monotonically reduced to meet the new requirement. However, the pulled-in refresh commands in previous thermal phase are not applied in new thermal phase. Entering new thermal phase the controller must count the number of pulled-in refresh commands as zero, regardless of remaining pulled-in refresh commands in previous thermal phase.

NOTE 2 LPDDR5 devices are refreshed properly if memory controller issues refresh commands with same or shorter refresh period than reported by MR4 OP[4:0]. If shorter refresh period is applied, the corresponding requirements from table apply. For example, When MR4 OP[4:0]= 00001B, controller can be in any refresh multiplier from 8 to 0.25. When MR4 OP[4:0]= $00010_B$, the only prohibited refresh rate is 8 * tREFI.

NOTE 3 As long as satisfying definition in this table, executing the extra refresh command which is over the specification allows. Even though the extra refresh command is not different just like the normal refresh command which refresh is executed and refresh counter is incremented, however the extra refresh command does not count as postponed/pulled-in refresh command. Refer to Figure 116 for detail..

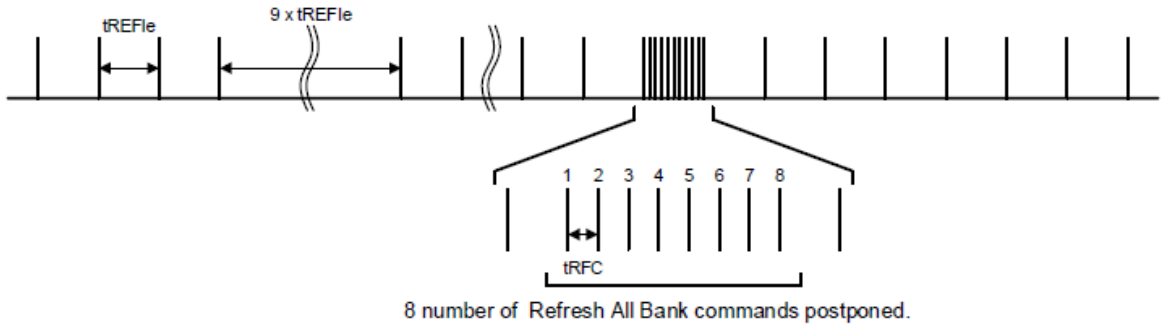


**Figure 114 — Postponing Refresh Commands (Example)**

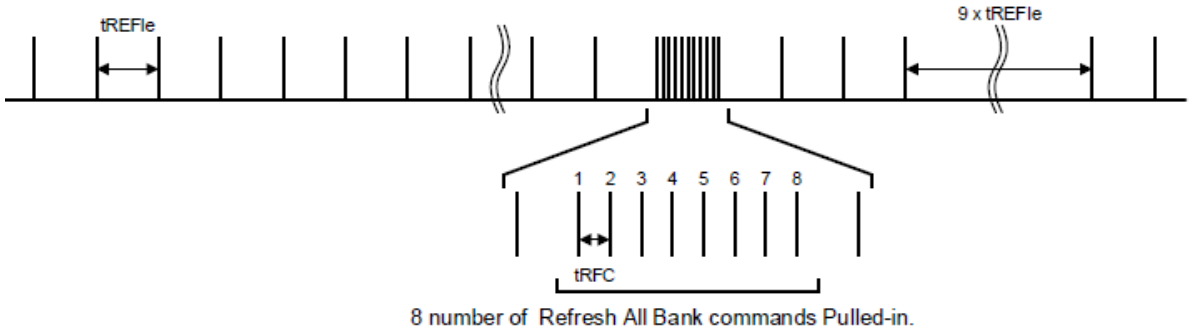


**Figure 115 — Pulling-in Refresh Commands (Example)**

The Refresh commands we called an extra refresh which was issued beyond "Maximum number of pulled-in or postponed REFab" and/or "substituting postponed/pulled-in refresh "in one burst is acceptable and it works as usual, however the extra refresh command does not count as postponed/pulled-in refresh command.

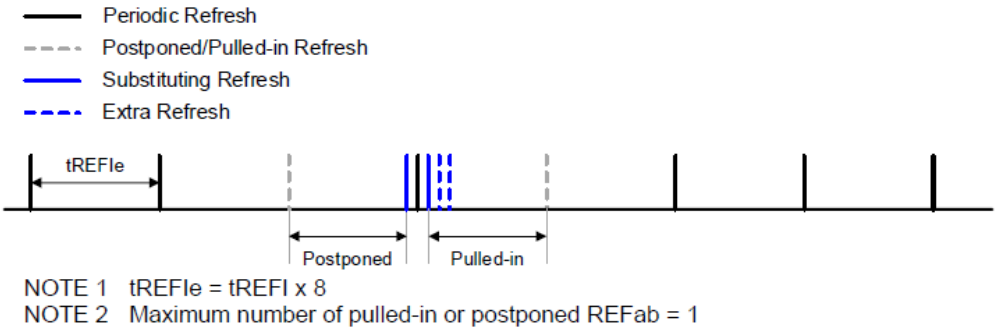


**Figure 116 – Extra Refresh (Example)**

### 7.5.2 Refresh Requirement

Between SRX command and SRE command, at least one extra refresh command is required. After the DRAM Self-Refresh Exit command, in addition to the normal Refresh command at tREFI interval, the LPDDR5 DRAM requires minimum of one extra Refresh command prior to Self-Refresh Entry command.

**Table 210 - Refresh Requirement Parameters for BG mode or 16Bank mode**

| Refresh Requirements | | Symbol | 2Gb | 3Gb | 4Gb | 6Gb | 8Gb | 12Gb | 16Gb | 24Gb | 32Gb | Units |
|---|---|---|---|---|---|---|---|---|---|---|---|---|
| Number of banks per channel | | | 16 | | | | | | | | | |
| Refresh Window (tREFW) (1x Refresh)[2,3] | | tREFW | 32 | | | | | | | | | ms |
| Required Number of REFRESH Commands in a tREFW window | | R | 8192 | 8192 | 8192 | 8192 | 8192 | 8192 | 8192 | 8192 | 8192 | |
| Average Refresh Interval (1x Refresh)[2] | REFab | tREFI | 3.906 | 3.906 | 3.906 | 3.906 | 3.906 | 3.906 | 3.906 | 3.906 | 3.906 | us |
| | REFpb | tREFipb | 488 | 488 | 488 | 488 | 488 | 488 | 488 | 488 | 488 | ns |
| Refresh Cycle Time (All Banks) | | tRFCab | 130 | 180 | 180 | 210 | 210 | 280 | 280 | TBD | TBD | ns |
| Refresh Cycle time (Per Bank) | | tRFCpb | 60 | 90 | 90 | 120 | 120 | 140 | 140 | TBD | TBD | ns |
| Per-bank Refresh to Per-bank Refresh different bank time | | tpbR2pbR | 60 | 90 | 90 | 90 | 90 | 90 | 90 | TBD | TBD | ns |
| REFpb to Activate command to different bank | | tpbR2act | 7.5 | 7.5 | 7.5 | 7.5 | 7.5 | 7.5 | 7.5 | TBD | TBD | ns |

NOTE 1 Refresh for each channel is independent of the other channel in a package. Power delivery in the user's system should be verified to make sure the DC operating conditions are maintained when multiple channels are refreshed simultaneously.

NOTE 2 1x refresh rate (tREFW=32ms) is supported at all temperatures at or below 85°C Tcase. If MR4 OP[4:0] indicates a refresh rate of greater than 1x is supported, tREFW can be extended.

NOTE 3 Refer to MR4 OP[4:0] for detailed Refresh Rate and its multipliers.

**Table 211 - Refresh Requirement Parameters for 8Bank mode**

| Refresh Requirements | | Symbol | 2Gb | 3Gb | 4Gb | 6Gb | 8Gb | 12Gb | 16Gb | 24Gb | 32Gb | Units |
|---|---|---|---|---|---|---|---|---|---|---|---|---|
| Number of banks | | | 8 | | | | | | | | | |
| Refresh Window (tREFW) (1x Refresh)[2,3] | | tREFW | 32 | | | | | | | | | ms |
| Required Number of REFRESH Commands in a tREFW window | | R | 8192 | 8192 | 8192 | 8192 | 8192 | 8192 | 8192 | 8192 | 8192 | |
| Average Refresh Interval (1x Refresh)[2] | REFab | tREFI | 3.906 | 3.906 | 3.906 | 3.906 | 3.906 | 3.906 | 3.906 | 3.906 | 3.906 | us |
| | REFpb | tREFipb | 488 | 488 | 488 | 488 | 488 | 488 | 488 | 488 | 488 | ns |
| Refresh Cycle Time (All Banks) | | tRFCab | 130 | 180 | 180 | 210 | 210 | 280 | 280 | TBD | TBD | ns |
| Refresh Cycle time (Per Bank) | | tRFCpb | 60 | 90 | 90 | 120 | 120 | 140 | 140 | TBD | TBD | ns |
| Per-bank Refresh to Per-bank Refresh different bank time | | tpbR2pbR | 60 | 90 | 90 | 90 | 90 | 90 | 90 | TBD | TBD | ns |
| REFpb to Activate command to different bank | | tpbR2act | 10 | 10 | 10 | 10 | 10 | 10 | 10 | TBD | TBD | ns |

NOTE 1 Refresh for each channel is independent of the other channel in a package. Power delivery in the user's system should be verified to make sure the DC operating conditions are maintained when multiple channels are refreshed simultaneously.

NOTE 2 1x refresh rate (tREFW=32ms) is supported at all temperatures at or below 85°C Tcase. If MR4 OP[4:0] indicates a refresh rate of greater than 1x is supported, tREFW can be extended.

NOTE 3 Refer to MR4 OP[4:0] for detailed Refresh Rate and its multipliers.

### 7.5.3 Optimized Refresh

Supporting optimized refresh is an optional feature in LPDDR5 specification. The use of Self Refresh mode introduces the possibility that an internally timed refresh event can be missed when Self Refresh Exit is registered. Upon exit from Self Refresh, it is required that at least one REFRESH command (1 all-bank or 16 per-bank for 4bank/4BG mode or 8 per-bank for 8bank mode) is issued before entry into a subsequent Self Refresh. However, this refresh can be managed as optimized way if memory controller can support Figure 117 optimized refresh timing. DRAM can also handle internal self refresh with own refresh timer.

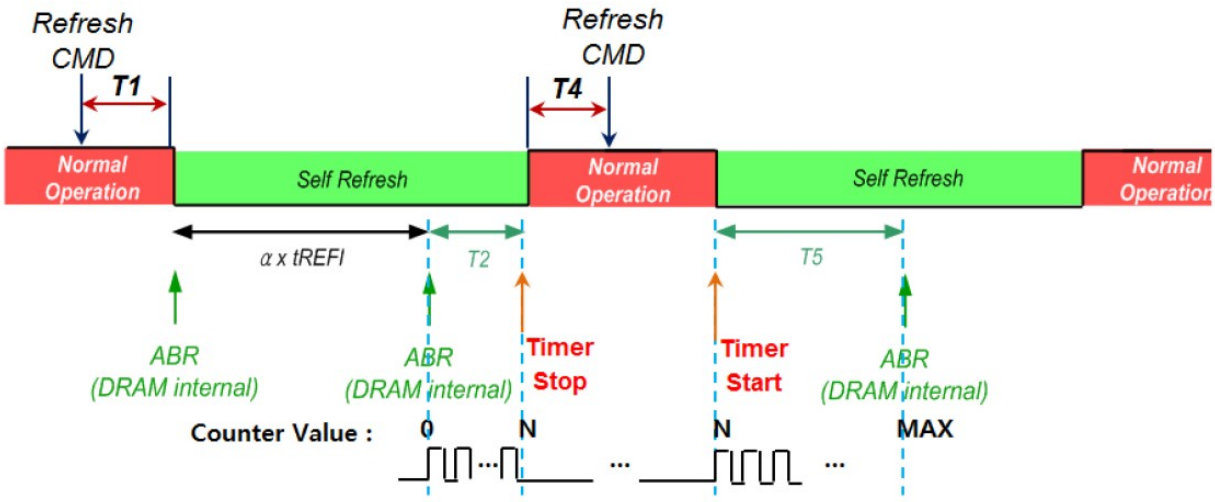


**Figure 117 - Optimized Refresh Operation**

Upon exit from self refresh mode, LPDDR5 SDRAM freeze and store the refresh timer value. When the DRAM enters self refresh mode, it shall resume the refresh timer from the saved value and increase it to the next value so that LPDDR5 can operate ABR only when the refresh timer expires in self refresh mode. If memory controller can manage the track of time(T1 & T4) for tREFI out of Self Refresh time period, it's all up to the memory controller to determine when to issue refresh command.

**Table 212 - MR25 OP[7] for Optimized Refresh Control**

| Function | Register Type | Operand | Data |
|---|---|---|---|
| Optimized Refresh mode | Write-Only | OP[7] | $0_B$: Optimized Refresh mode disabled<br>$1_B$: Optimized Refresh mode enabled (default) |

### 7.5.4 Self Refresh Operation

The Self Refresh command can be used to retain data in the LPDDR5 SDRAM; the SDRAM retains data without external Refresh command. The device has a built-in timer to accommodate Self Refresh operation. The Self Refresh is entered by Self Refresh Entry Command defined by having CS HIGH, CA[2:0] LOW, CA3 HIGH, CA4 LOW, CA5 HIGH and CA6 HIGH at the rising edge of the clock and CS don't care, CA[4:0] Valid (Valid that means it is Logic Level, High or Low), CA5 LOW and CA6 LOW at the falling edge of the clock. If Self Refresh command is issued with CA6 HIGH at the falling edge of the clock, Self-Refresh Command is initiated with Power Down status. Self-Refresh command is only allowed when read data burst is completed, in other words Read postamble is completed and SDRAM is idle state.

During Self Refresh mode, external clock input is needed and all input pin of SDRAM are activated and CA ODT state is maintained setting of its mode register, as well as NT ODT. SDRAM can accept the following commands; PDE, DSM, MRR, CAS, DES, SRX, MPC, RFF, WFF, RDC, MRW except PASR setting.

LPDDR5 SDRAM can operate in Self Refresh in both the standard or elevated temperature ranges.

SDRAM will also manage Self Refresh power consumption when the operating temperature changes lower at low temperature and higher at high temperatures.

For proper Self Refresh operation, power supply pins (VDD1, VDD2H, VDD2L and VDDQ) is required to be at valid levels. However VDDQ may be turned off during Self-Refresh with Power Down after tESPD is satisfied (Refer to **Figure 119** about tESPD).

Prior to exiting Self-Refresh with Power Down, VDDQ is required to be within specified limits. The minimum time that the SDRAM is required to remained in Self Refresh mode is tSRmin. Once Self Refresh Exit is registered, only MRR, CAS(WS_FS), CAS(WS_WR), CAS(WS_RD), CAS(WS_OFF), WFF, RFF, RDC, DES, MPC, MRW except PASR setting are allowed until tXSR is satisfied.

### 7.5.3 Self Refresh Operation (Cont'd)

The use of Self Refresh mode introduces the possibility that an internally timed refresh event can be missed when Self Refresh Exit is registered. Upon exit from Self Refresh, it is required that at least one REFRESH command (1 all-bank or 16 per-bank for 4bank/4BG mode or 8 per-bank for 8bank mode) is issued before entry into a subsequent Self Refresh. This REFRESH command is not included in the count of regular refresh commands required by the tREFI interval, and does not modify the postponed or pulled-in refresh counts; the REFRESH command does count toward the maximum refreshes permitted within 2 x tREFI.

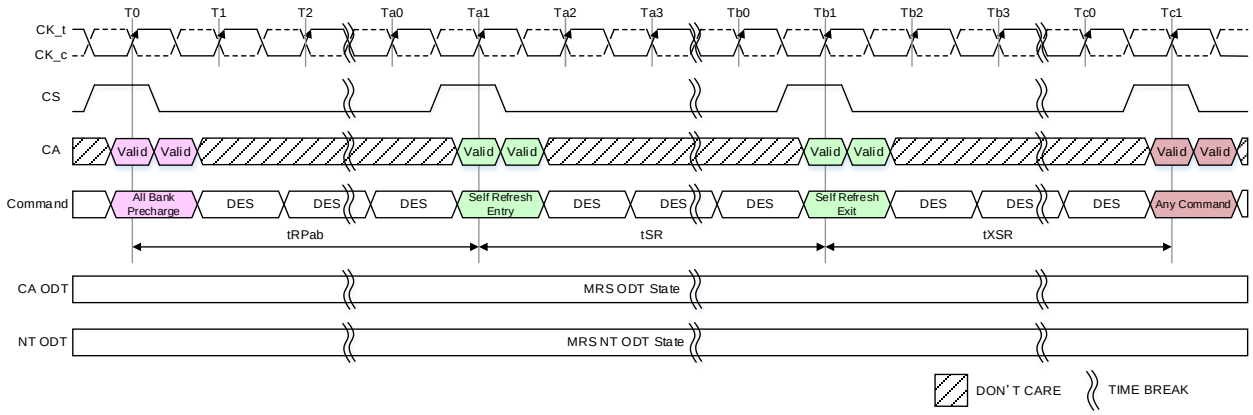


NOTE 1 PDE, DSM, MRR, CAS, DES, SRX, MPC, RFF, WFF, RDC, MRW except PASR setting is allowed during Self Refresh.

NOTE 2 DES commands are shown for ease of illustration; other commands may be valid at these times.

**Figure 118 — Self Refresh Entry/Exit Timing**

### 7.5.4.1 Power Down Entry and Exit during Self refresh

Entering/Exiting Power Down Mode is allowed during Self Refresh mode in SDRAM. The related timing parameters between Self Refresh Entry/Exit and Power Down Entry/Exit are shown in
Figure **119**. The power-down state is asynchronously exited when CS toggles HIGH (VIHPD). The AC parameters related to the Power Down are defined in the Power Down section, 7.5.7. The operation by command issued prior to PDE is required to be completed before changing clock frequency or stop clocking or turning off VDDQ.

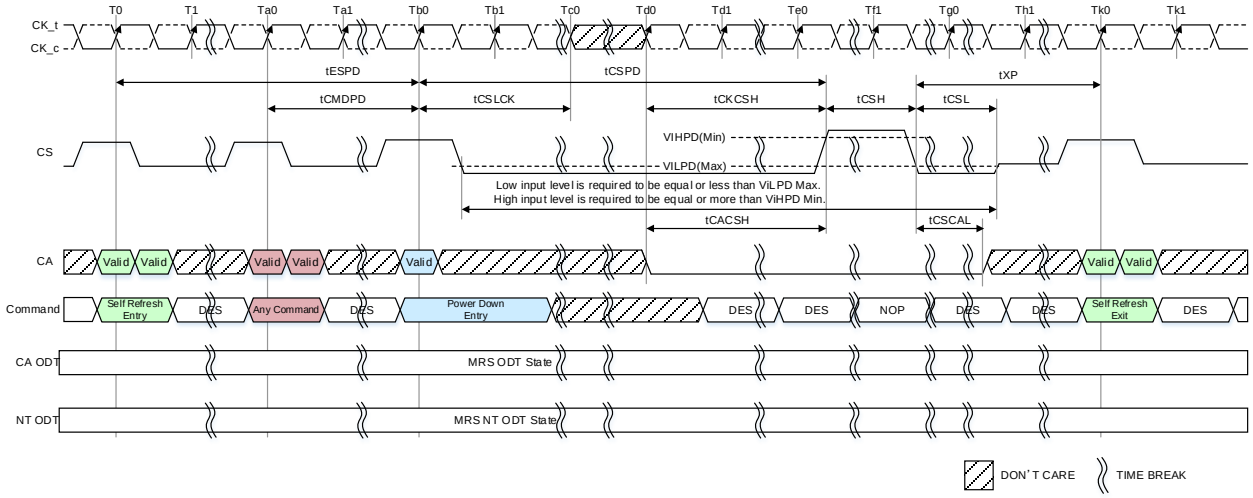


NOTE 1 PDE, DSM, MRR, CAS, DES, SRX, MPC, RFF, WFF, RDC, MRW except PASR setting is allowed during Self Refresh (No Power Down). The operation by command issued prior to Power Down Entry (PDE) is required to be completed before clock frequency or stop clocking or turning off VDDQ.

NOTE 2 Input clock frequency can be changed or the input clock can be stopped or floated after tCSLCK is satisfied and during Power Down, provided that upon existing Power Down, the clock is stable and within specified limits for a minimum of tCKCSH of stable clock prior to Power Down exit and the clock frequency is between the minimum and maximum specified frequency for the speed grade in use.

NOTE 3 The start point of tCSH and the end point of tCSPD/tCKCSH are crossover point of VIHPD(Min).

NOTE 4 The start point of tCSL/tXP and the end point of tCSL are crossover point of VILPD(Max).

NOTE 5 DES commands are shown for ease of illustration; other commands may be valid at these times where the CA input is indicated "don't care" together.

**Figure 119 — Self Refresh Entry/Exit Timing with Power Down Entry/Exit**

### 7.5.3.1 Power Down Entry and Exit during Self refresh (Cont'd)

If Self Refresh command is issued with CA6 HIGH at the falling edge of the clock, Self-Refresh Command is initiated with Power Down status.

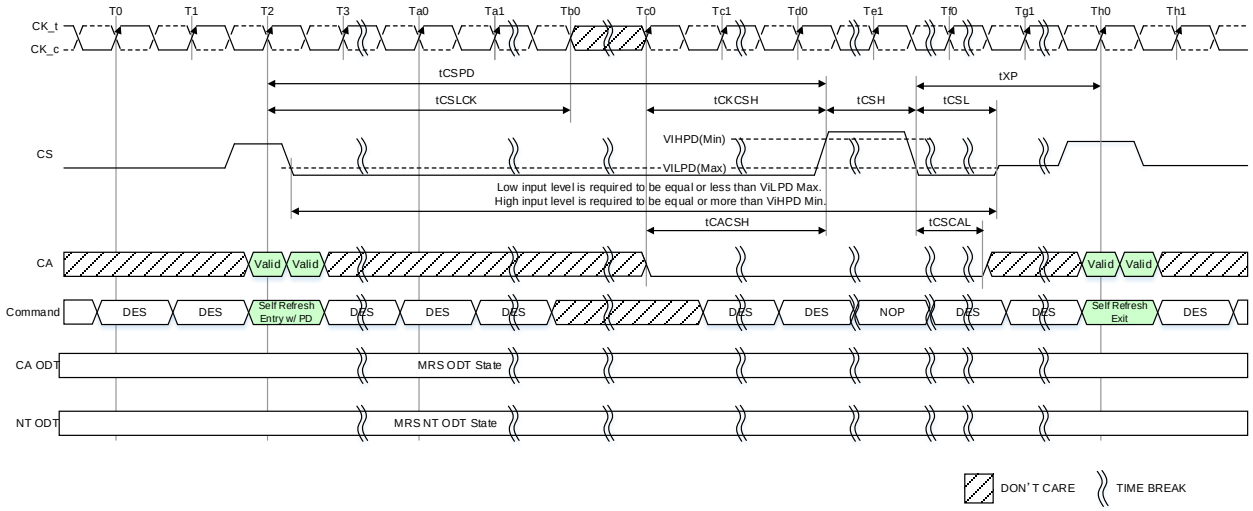


NOTE 1 Input clock frequency can be changed or the input clock can be stopped or floated after tCSLCK is satisfied and during Power Down, provided that upon exiting Power Down, the clock is stable and within specified limits for a minimum of tCKCSH of stable clock prior to Power Down exit and the clock frequency is between the minimum and maximum specified frequency for the speed grade in use.

NOTE 2 DES commands are shown for ease of illustration; other commands may be valid at these times where the CA input is indicated "don't care" together.

**Figure 120 — Self Refresh Entry with PD="1" Timing**

### 7.5.4.2 Command input Timing after Power Down Exit during Self Refresh

Command input timings after Power Down Exit during Self Refresh mode are shown in **Figure 121**.

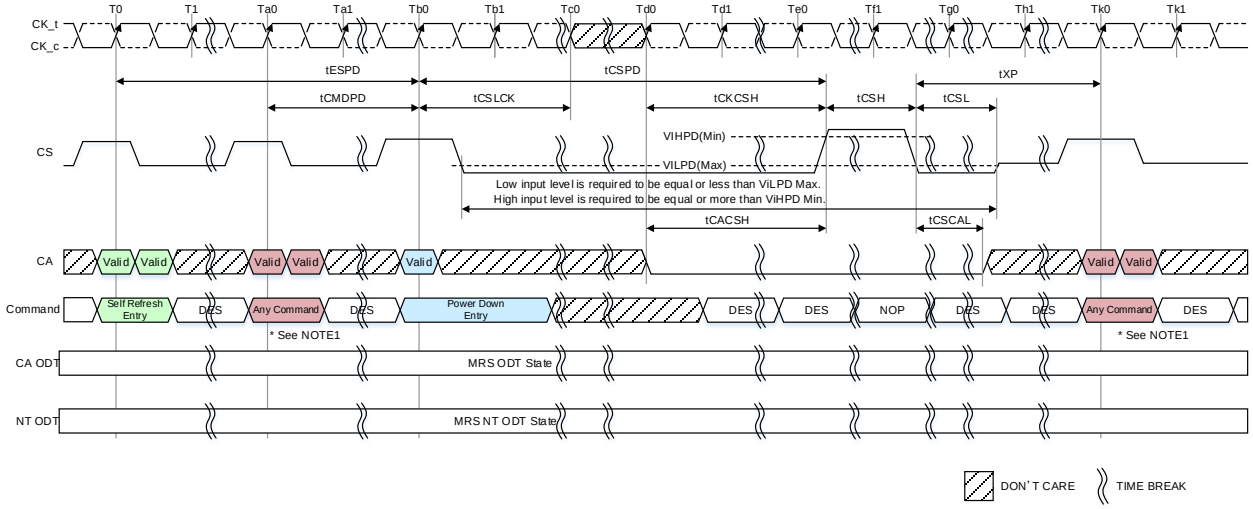


NOTE 1 PDE, DSM, MRR, CAS, DES, SRX, MPC, RFF, WFF, RDC, MRW except PASR setting is allowed during Self Refresh (No Power Down). The operation by command issued prior to Power Down Entry (PDE) is required to be completed before clock frequency or stop clocking or turning off VDDQ.

NOTE 2 Input clock frequency can be changed or the input clock can be stopped or floated after tCSLCK is satisfied and during Power Down, provided that upon exiting Power Down, the clock is stable and within specified limits for a minimum of tCKCSH of stable clock prior to Power Down exit and the clock frequency is between the minimum and maximum specified frequency for the speed grade in use.

NOTE 3 DES commands are shown for ease of illustration; other commands may be valid at these times where the CA input is indicated "don't care" together.

**Figure 121 — Command input timing after Power Down Exit during Self Refresh**

### 7.5.4.3 Self Refresh AC Timing Table

**Table 213 — Self Refresh AC Timing**

| Parameters | Symbol | Min/ Max | Value | Unit | Note |
|---|---|---|---|---|---|
| Self Refresh Timing | | | | | |
| Delay from SRE command to PDE | tESPD | Min. | 2 | nCK | |
| Minimum Self Refresh Time (Entry to Exit) | tSR | Min. | Max(15ns, 2nCK) | ns | 1 |
| Exit Self Refresh to Valid commands | tXSR | Min. | tRFCab + Max(7.5ns, 2nCK) | ns | 1 |

NOTE 1 Delay time has to satisfy both analog time(ns) and clock count(nCK). It means that tESPD will not expire until CK has toggled through at least 2 full cycles (2*nCK) and 1.75ns has transpired. The case which 2nCK is applied to is shown below.

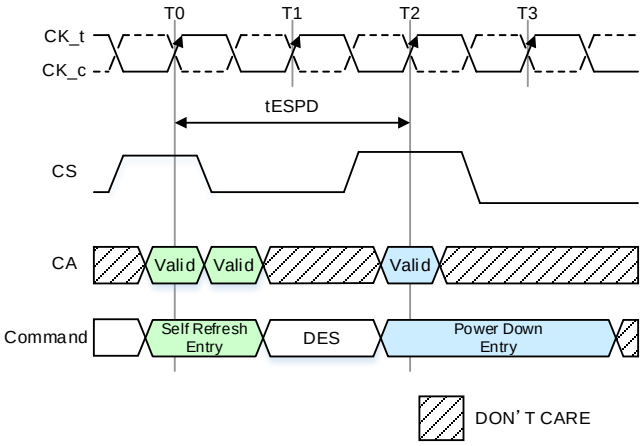

#### 7.5.4.4 MRR, MRW, RFF, WFF, RDC, MPC Command during tXSR

Mode Register Read (MRR), Mode Register Write (MRW), Write FIFO (WFF), Read FIFO (RFF), Read DQ Calibration (RDC) and Multi Purpose Command (MPC) can be issued during tXSR period.

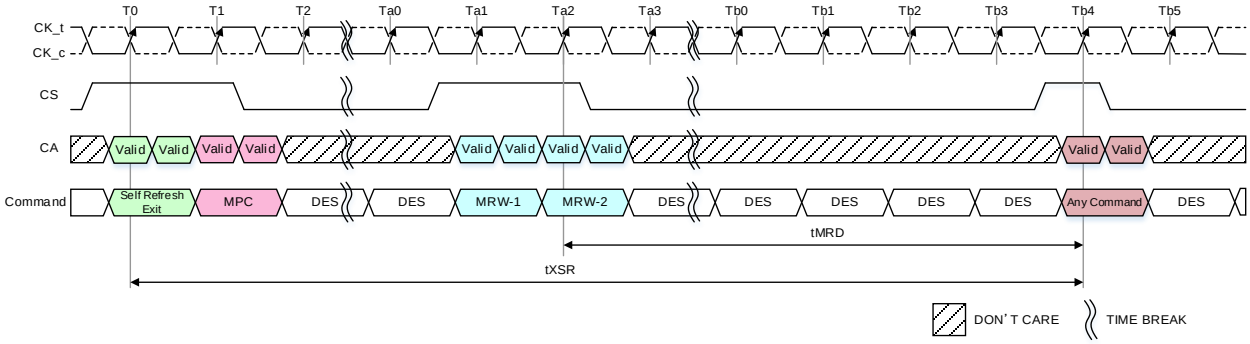


NOTE 1 MPC and MRW command are shown in this figure, any combination of MRR, MRW, WFF, RFF, RDC and MPC is allowed during tXSR period.
NOTE 2 Any command also includes MRR, MRW, WFF, RFF, RDC and all MPC command.
NOTE 3 DES commands are shown for ease of illustration; other commands may be valid at these times.

**Figure 122 — MRR, MRW, WFF, RFF, RDC and MPC Commands Issuing Timing during tXSR**

**Table 214 — Self Refresh Exit (SRX) Command Timing Constraints**

| Current Command | Next Command | Timing Constraints (nCK) | | Note |
|---|---|---|---|---|
| | | Min | Max | |
| Self Refresh Exit (SRX) | MODE REGISTER READ (MRR) | 1 | - | 1 |
| | MODE REGISTER WRITE-1 (MRW-1) | 1 | - | |
| | MODE REGISTER WRITE-2 (MRW-2) | illegal | illegal | |
| | WRITE FIFO (WFF) | 1 | - | 1 |
| | READ FIFO (RFF) | 1 | - | 1 |
| | READ DQ CALIBRATION (RDC) | 1 | - | 1 |
| | MULTI PURPOSE COMMAND (MPC) | 1 | - | |

NOTE 1 WCK2CK sync. state is required to issue the next command. If not in WCK2CK sync. state, CAS_WS command is required prior to issuing the next command.

### 7.5.5 Partial Array Self Refresh (PASR)

#### 7.5.5.1 PASR Segment Masking

The LPDDR5 SDRAM adopts 8 bank base refresh schemes. A segment in each bank for 8 bank bases of the LPDDR5 SDRAM can be independently configured whether a Self Refresh operation is taking place. One mode register unit of 8 bits, accessible via MRW command, is assigned to program the segment masking status of each segment up to 8 segments. For segment masking bit assignments, see Mode Register 23.

The mask bit to the segment controls a refresh operation of entire memory within the segment. When the segment is masked via MRW, a refresh operation to the entire segment is blocked and data retention by a segment is not guaranteed in Self Refresh mode. To enable a refresh operation to the segment, a coupled mask bit has to be programmed, “unmasked”.

**Table 215 - Example of Segment Masking use in LPDDR5 SDRAM**

| | Segment Mask (MR23) | Bank 0 | Bank 1 | Bank 2 | Bank 3 | Bank 4 | Bank 5 | Bank 6 | Bank 7 |
|---|---|---|---|---|---|---|---|---|---|
| Segment 0 | 0 | | | | | | | | |
| Segment 1 | 0 | | | | | | | | |
| Segment 2 | 1 | M | M | M | M | M | M | M | M |
| Segment 3 | 0 | | | | | | | | |
| Segment 4 | 0 | | | | | | | | |
| Segment 5 | 0 | | | | | | | | |
| Segment 6 | 0 | | | | | | | | |
| Segment 7 | 1 | M | M | M | M | M | M | M | M |

NOTE 1 This table illustrates an example. When a refresh operation to segment 2 and segment 7 are masked.

### 7.5.6 Partial Array Refresh Control (PARC)

LPDDR5 SDRAM supports Partial Array Refresh Control (PARC) to reduce IDD5 power consumption.

If PARC MR25 OP[6]=$1_B$, LPDDR5 SDRAM skips the refresh of segment where defined PASR Segment Mask: MR23 OP[7:0] when All bank or Per bank Refresh command is received.

### 7.5.7 Power Down

#### 7.5.7.1 Power-Down Entry and Exit

Power-Down is entered by issuing Power-Down Entry Command. Power-Down Entry Command is issued by holding CS HIGH, CA[5:0] LOW and CA6 HIGH at the first rising edge of the clock. Power-Down Entry Command must not be issued while the following operations are in progress:

- Mode Register Read
- Mode Register Write
- Read
- Write
- Mask Write
- VRCG High Current mode Entering/Exiting via MRW

And LPDDR5 SDRAM cannot be placed in Power Down state during following state and until those mode completely terminated (Self Refresh Entry with Power Down Entry command is contained in Power Down Entry command. See Command Truth Table for detail.).

- In Enhanced RDQS Training Mode: MR46 OP[0] =$1_B$
- In RDQS Toggle Mode: MR46 OP[1] =$1_B$
- In WCK2CK Leveling Mode: MR18 OP[6] =$1_B$
- In CBT: Command Bus Training Mode: MR16 OP[5:4] = $01_B$, $10_B$ or $11_B$
- In changing Physical Mode Register by Frequency Set Point function
- In PPR: Post Package Repair Mode: MR41 OP[4] =$1_B$
- In WCK-RDQS_t/Parity Training Mode: MR46 OP[2]=$1_B$
- In Read/Write-based WCK-RDQS_t Training mode: MR26 OP[7] =$1_B$
- From DCM start command to DCM stop command
- VREF(CA) Value setting via MRW: MR12 OP[6:0]
- VREF(DQ) Value setting via MRW: MR14 OP[6:0] and MR15 OP[6:0]

Power down entry command is not allowed to be next command of Write FIFO (WFF) command.

Power-Down Entry Command can be issued while any other operations such as row activation, Precharge, Auto Precharge or Refresh are in progress. The Power-Down IDD specification will not be applied until such operations are complete. Power-Down entry and exit are shown in **Figure 123**.

Entering Power-Down mode deactivates the input and output buffers, excluding CS and Reset_n. Clock input is required after Power-Down Entry Command is issued, this timing period is defined as tCSLCK. Power-Down Entry Command will result in deactivation of all input receivers except CS and Reset_n after tCSLCK has expired. In Power-Down mode, CS must be held LOW and all other input signals except Reset_n are “Don't Care”. CS LOW is required to be maintained until tCSPDmin is satisfied. During Power Down mode, CS Rx input level applies Asynchronous mode definition.

VDDQ can be turned off during Power-Down mode. Prior to exiting Power-Down mode, VDDQ is required to be within its minimum/maximum operating range. Vref(CA) update timing (TBD ns) is required after the voltage (VDDQ) ramp up is completed for reliable operation.

No refresh operations are performed in Power-Down mode except Self-Refresh Power-Down and Deep Sleep Mode. The maximum duration in Power-Down mode is only limited by the refresh requirements outlined in the Refresh command section.

The Power-Down state is asynchronously exited when CS toggles. Power-Down Entry command can be re-issued with tXPmin after CS goes LOW. A valid, executable command can be applied with Power-Down exit latency tXP after CS goes LOW.

Clock frequency change or Clock Stop is inhibited during tCMDPD, tESPD, tCSLCK, tCKCSH, tXP, tMRWPD, tZQPD, tOSCPD, tERQX, tFC and tWLWCKOFF periods.

If Power-Down occurs when all banks are idle, this mode is referred to as idle Power-Down. If Power-Down occurs when there is a row active in any bank, this mode is referred to as active Power-Down. And if Power-Down occurs when Self Refresh is in progress, this mode is referred to as Self Refresh Power-Down in which the internal refresh is continuing in the same way as Self Refresh mode.

When CA, CK and/or CS ODT is enabled via MR11 OP[6:4] and also MR17 setting, the rank providing ODT will continue to terminate CA, CK bus in all DRAM states including Power-Down. CS ODT state goes OFF ignoring MRS ODT state after Power-Down Entry is issued and returns to MRS ODT state with Power-Down Exit.

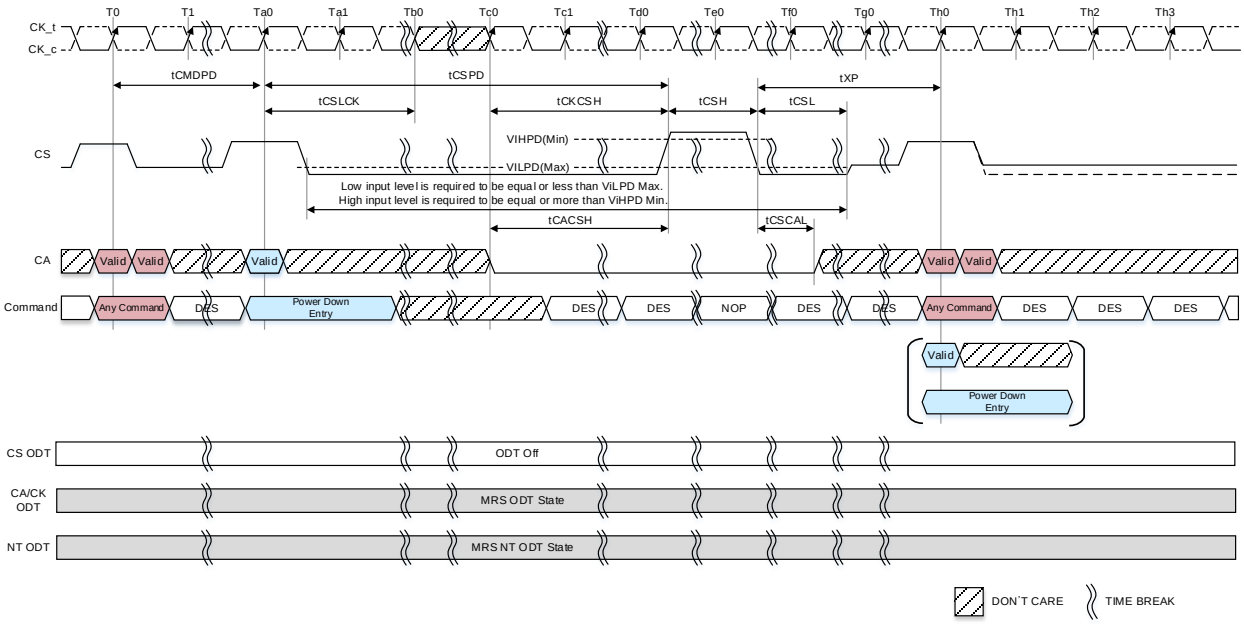


NOTE 1 DES commands are shown for ease of illustration; other commands may be valid at these times where the CA input is indicated "don't care" together.

NOTE 2 Input clock frequency can be changed or the input clock can be stopped or floated after tCSLCK is satisfied and during Power Down, provided that upon exiting Power Down, the clock stable and within specified limits for a minimum of tCKCSH of stable clock prior to Power Down exit and clock frequency is between the minimum and maximum specified frequency for the speed grade in use.

NOTE 3 The start point of tCSH and the end point of tCSPD/tCKCSH are crossover point of VIHPD(Min).

NOTE 4 The start point of tCSL/tXP and the end point of tCSL are crossover point of VILPD(Max).

NOTE 5 Power Down Entry command can be issued at Th0.

NOTE 6 CA input is required be Low during tCSH.

**Figure 123 Basic Power-Down Entry and Exit Timing**

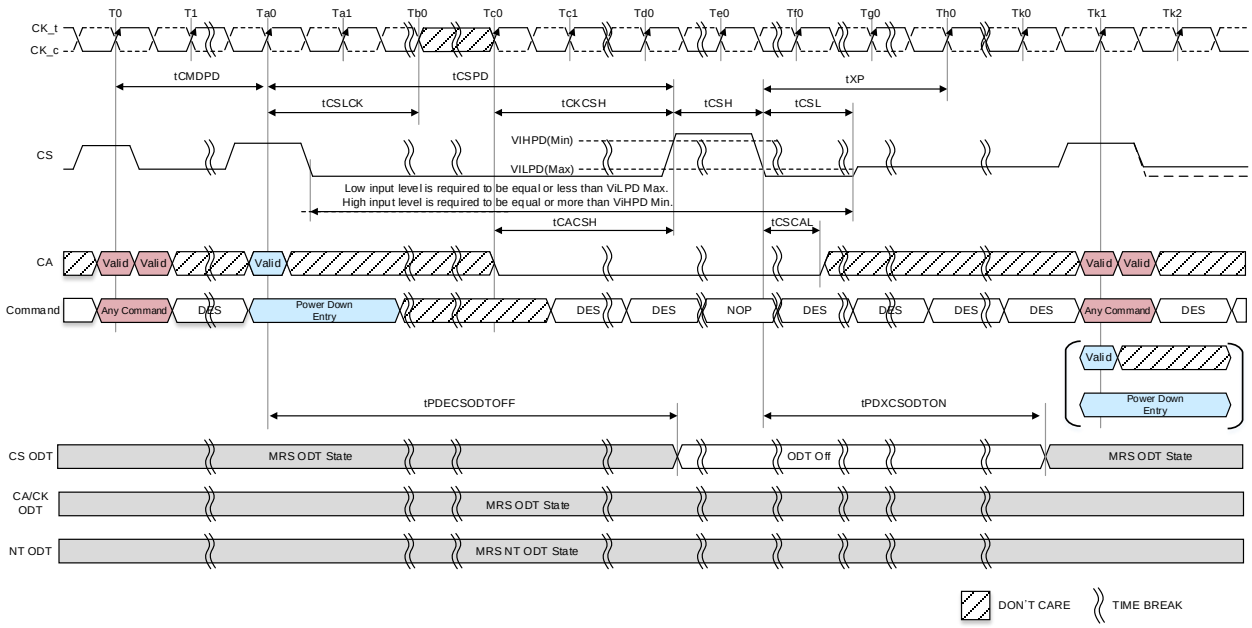


NOTE 1 DES commands are shown for ease of illustration; other commands may be valid at these times where the CA input is indicated "don't care" together.

NOTE 2 Input clock frequency can be changed or the input clock can be stopped or floated after tCSLCK is satisfied and during Power Down, provided that upon exiting Power Down, the clock stable and within specified limits for a minimum of tCKCSH of stable clock prior to Power Down exit and clock frequency is between the minimum and maximum specified frequency for the speed grade in use.

NOTE 3 The start point of tCSH and the end point of tCSPD/tCKCSH are crossover point of VIHPD(Min).

NOTE 4 The start point of tCSL/tXP and the end point of tCSL are crossover point of VILPD(Max).

NOTE 5 Power Down Entry command can be issued at Tk1: tPDXCSODTON is required to be expired.

NOTE 6 CA input is required be Low during tCSH.

**Figure 124 - Basic Power-Down Entry and Exit Timing: CS ODT Enable**

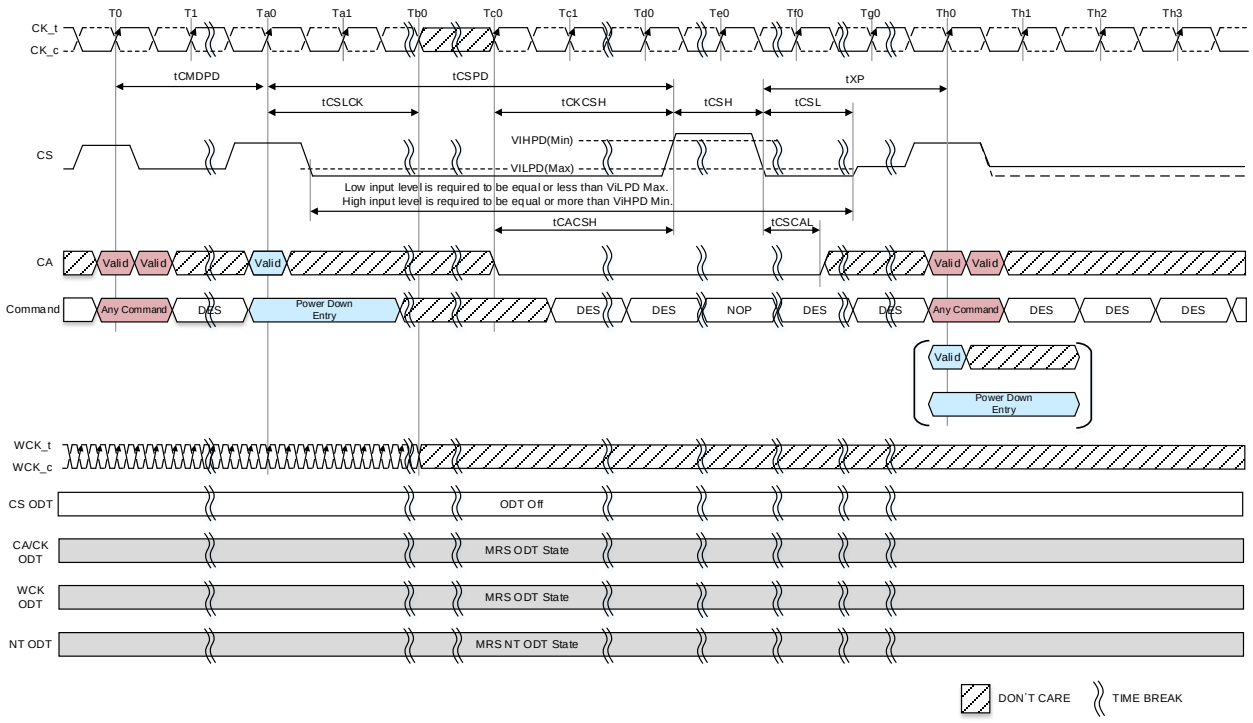


NOTE 1 DES commands are shown for ease of illustration; other commands may be valid at these times where the CA input is indicated "don't care" together.
NOTE 2 tWCK2CK is 0ps in this instance.
NOTE 3 Input clock frequency can be changed or the input clock can be stopped or floated after tCSLCK is satisfied and during Power Down, provided that upon exiting Power Down, the clock stable and within specified limits for a minimum of tCKCSH of stable clock prior to Power Down exit and clock frequency is between the minimum and maximum specified frequency for the speed grade in use.
NOTE 4 WCK input is required to be continued at least the end of tCSLCK.
NOTE 5 The start point of tCSH and the end point of tCSPD/tCKCSH are crossover point of VIHPD(Min).
NOTE 6 The start point of tCSL/tXP and the end point of tCSL are crossover point of VILPD(Max).
NOTE 7 Power Down Entry command can be issued at Th0.
NOTE 8 CA input is required be Low during tCSH.

**Figure 125 – Basic Power-Down Entry and Exit Timing during WCK2CK Sync state**

In the following cases, the basic timing which is shown in **Figure 123** for the command interval to Power Down and/or clock stop/frequency change timing do not apply.

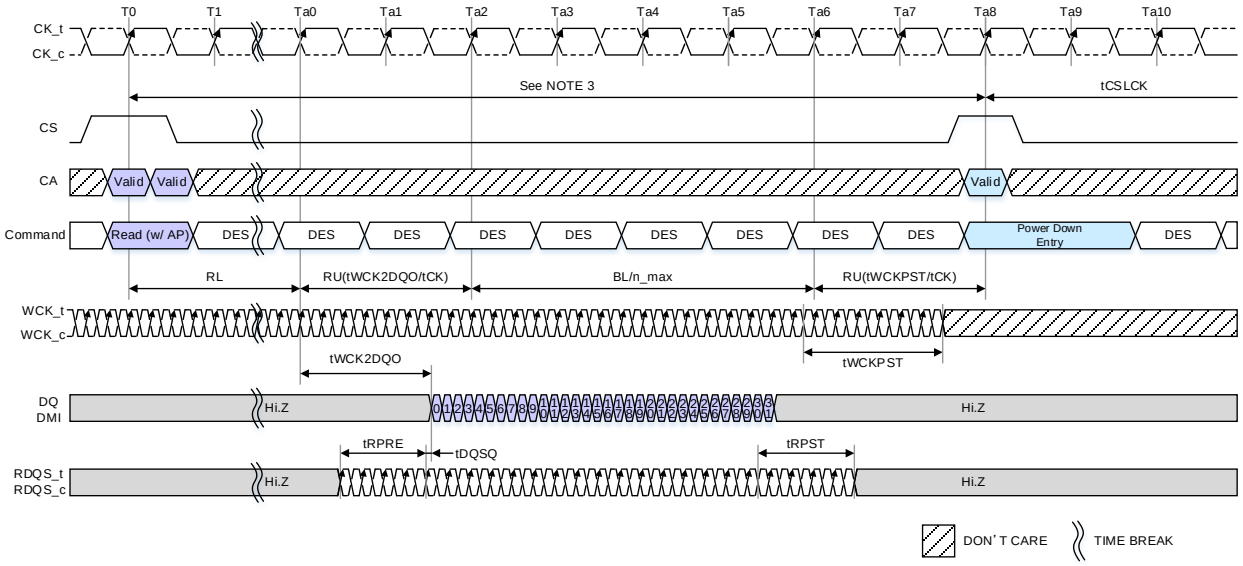


NOTE 1 tWCK2CK is 0ps in this instance.
NOTE 2 Assumption: tWCK2DQO=1900ps, tCK=1250ps, tRPST = 4.5nWCK, tWCKPST = 6.5nWCK
NOTE 3 RL+RU(tWCK2DQO(max)/tCK)+BL/n_max+RU(tWCKPST/tCK)
NOTE 4 tWCK2DQO(max) is applied tWCK2DQO_LF(max) or tWCK2DQO_HF(max) depending on MR18 OP[3]: WCK Frequency Mode setting.
MR18 OP[3]=$0_B$: tWCK2DQO_LF(max) MR18 OP[3]=$1_B$: tWCK2DQO_HF(max)
NOTE 5 Input clock frequency can be changed or the input clock can be stopped or floated after tCSLCK from Power Down command.

**Figure 126 - Read and Read with AP to Power-Down Entry: 8B Mode CKR=4:1, NT-ODT=Disable**

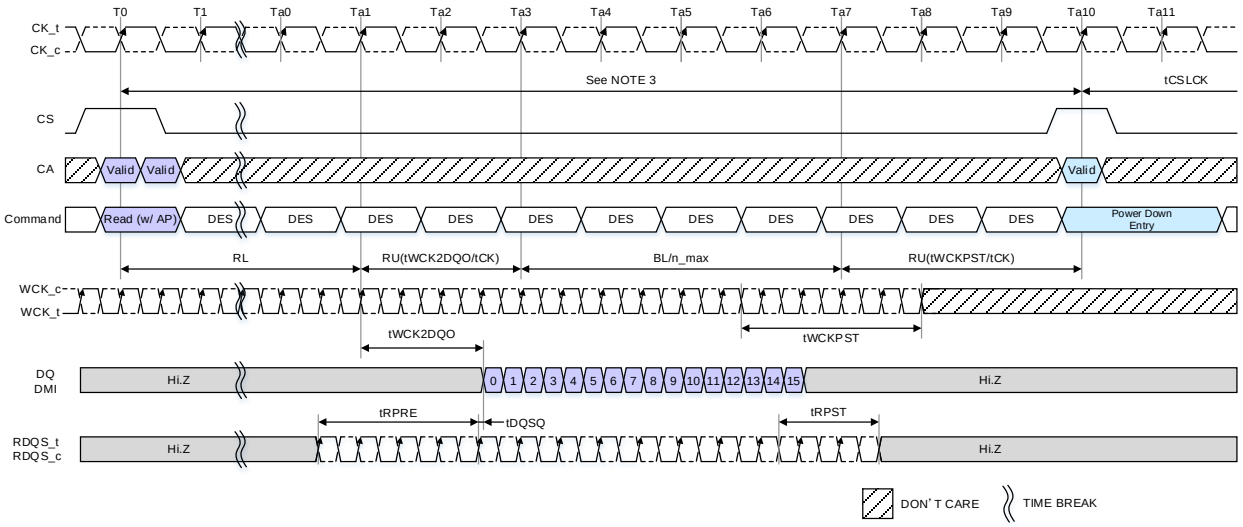


NOTE 1 tWCK2CK is 0ps in this instance.
NOTE 2 Assumption: tWCK2DQO=1900ps, tCK=1250ps, tRPST = 2.5nWCK, tWCKPST = 4.5nWCK
NOTE 3 RL+RU(tWCK2DQO(max)/tCK)+BL/n_max+RU(tWCKPST/tCK)
NOTE 4 tWCK2DQO(max) is applied tWCK2DQO_LF(max) or tWCK2DQO_HF(max) depending on MR18 OP[3]: WCK Frequency Mode setting.
MR18 OP[3]=$0_B$: tWCK2DQO_LF(max) MR18 OP[3]=$1_B$: tWCK2DQO_HF(max)
NOTE 5 Input clock frequency can be changed or the input clock can be stopped or floated after tCSLCK from Power Down command.

**Figure 127 - Read and Read with AP to Power-Down Entry: 16B Mode CKR=2:1, NT-ODT=Disable**

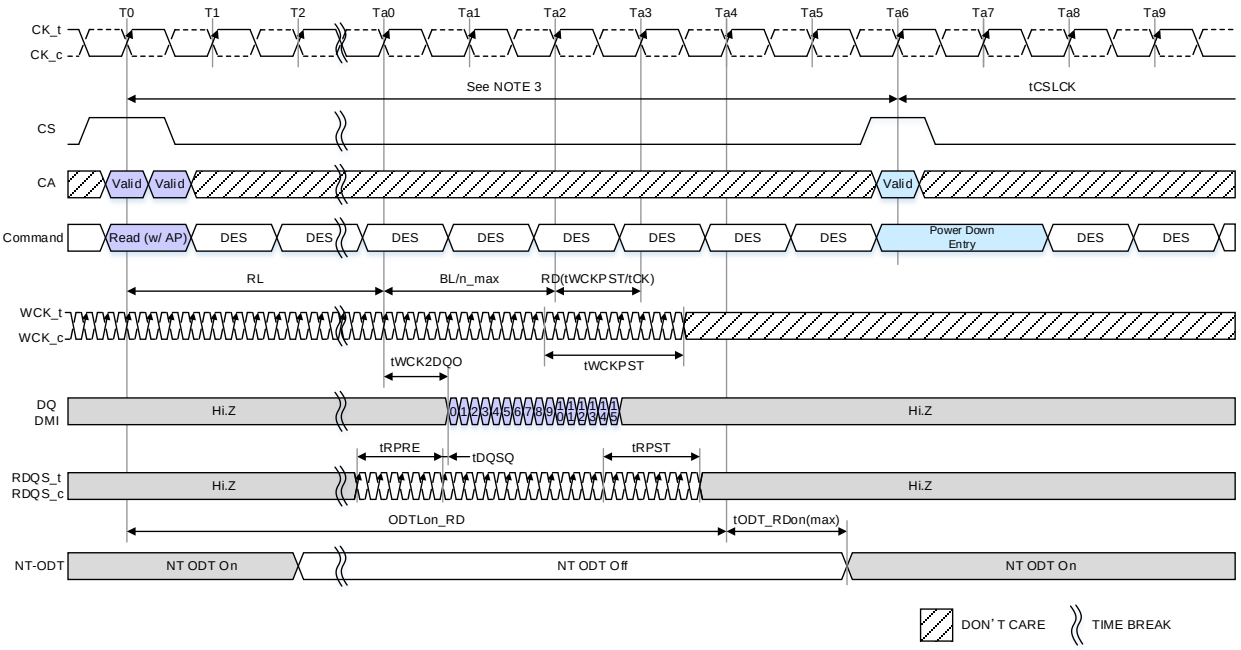


NOTE 1 tWCK2CK is 0ps in this instance.
NOTE 2 tRPST = 4.5nWCK, tWCKPST = 6.5nWCK
NOTE 3 ODTLon_RD+RU(tODT_RDon(max)/tCK)
NOTE 4 Input clock frequency can be changed or the input clock can be stopped or floated after tCSLCK from Power Down command.

**Figure 128 - Read with AP to Power-Down Entry: 16B Mode CKR=4:1 NT-ODT=Enable**

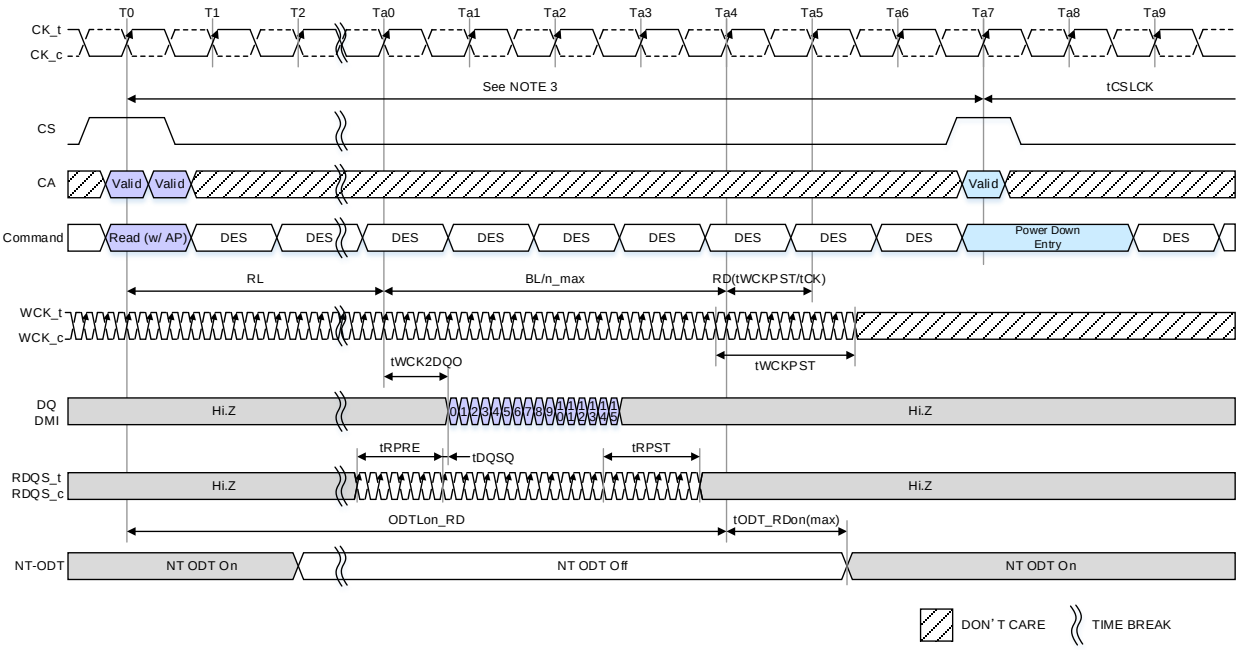


NOTE 1 tWCK2CK is 0ps in this instance.
NOTE 2 tRPST = 4.5nWCK, tWCKPST = 6.5nWCK
NOTE 3 ODTLon_RD+RU(tODT_RDon(max)/tCK) +1nCK
NOTE 4 Input clock frequency can be changed or the input clock can be stopped or floated after tCSLCK from Power Down command.

**Figure 129 - Read and Read with AP to Power-Down Entry: BG Mode CKR=4:1 NT-ODT=Enable**

Read and Read with AP to Power-Down Entry timing also applies following case.

- Read FIFO command to Power Down entry command
- Read DQ Calibration command to Power Down entry command

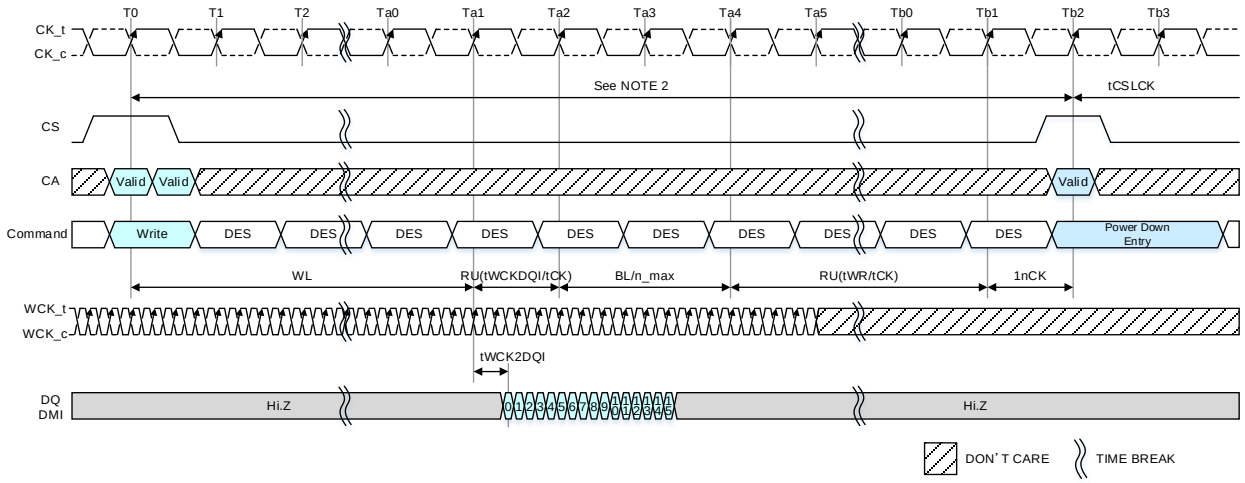


NOTE 1 Power Down Entry Command is not allowed until the end of the burst operation.
NOTE 2 Minimum Delay time from Write Command or Masked Write Command to Power Down Entry is as follows.
WL + RU(tWCKDQI(max)/tCK) + BL/n_max + RU(tWR/tCK) + 1nCK:
RU(tWR/tCK) means Max("Analog value of tWR"/tCK(avg), 3nCK).
NOTE 3 tWCK2DQI(max) is applied tWCK2DQI_LF(max) or tWCK2DQI_HF(max) depending on MR18 OP[3]: WCK Frequency Mode setting.
MR18 OP[3]=$0_B$: tWCK2DQI_LF(max) MR18 OP[3]=$1_B$: tWCK2DQI_HF(max)
NOTE 4 This Timing is applied regardless of DQ ODT Disable/Enable setting: MR11 OP[2:0].
NOTE 5 This timing diagram only applies to the Write and Masked Write Commands without Auto Precharge.
NOTE 6 Input clock frequency can be changed or the input clock can be stopped or floated after tCSLCK from Power Down command.

**Figure 130 - Write and Masked Write to Power-Down Entry**

Write and Masked Write to Power-Down Entry timing also applies following case.

- From a Write command following a CAS Write X command to Power Down entry command.

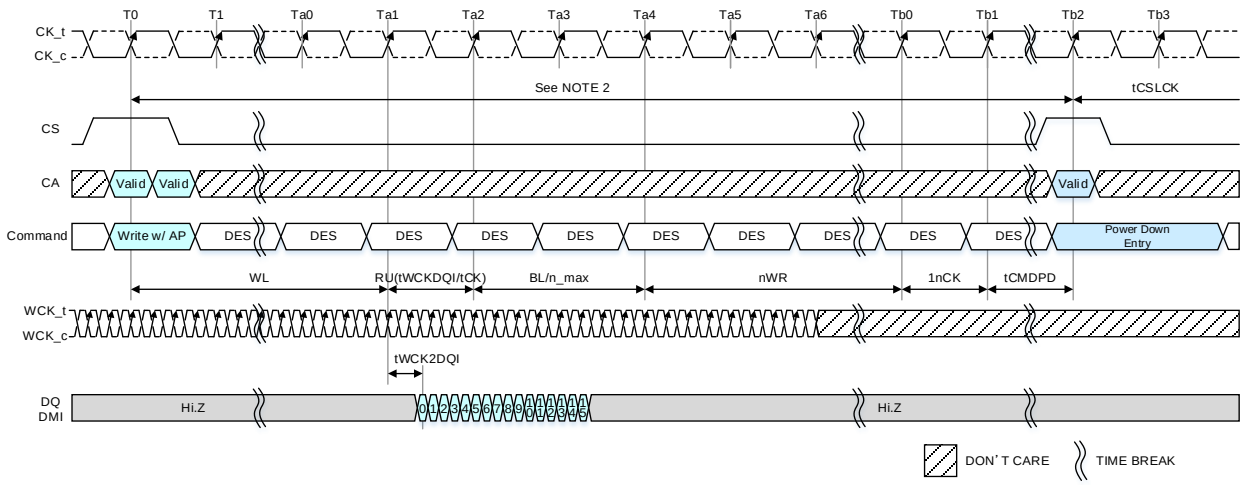


NOTE 1 Power Down Entry Command is not allowed until the end of the burst operation.
NOTE 2 Minimum Delay time from Write with Auto Precharge Command or Masked Write with Auto Precharge Command to Power Down Entry Command is more than as follows:
WL + RU(tWCKDQI(max)/tCK) + BL/n_max + nWR + 1nCK + tCMDPD
NOTE 3 tWCK2DQI(max) is applied tWCK2DQI_LF(max) or tWCK2DQI_HF(max) depending on MR18 OP[3]: WCK Frequency Mode setting.
MR18 OP[3]=$0_B$: tWCK2DQI_LF(max) MR18 OP[3]=$1_B$: tWCK2DQI_HF(max)
NOTE 4 tCMDPD is attributed to internal Precharge command.
NOTE 5 This timing is applied regardless of DQ ODT Disable/Enable setting: MR11[OP2:0].
NOTE 6 Input clock frequency can be changed or the input clock can be stopped or floated after tCSLCK from Power Down command.

**Figure 131 - Write with AP and Masked Write with Auto Precharge to Power-Down Entry**

Write and Masked Write to Power-Down Entry timing also applies following case.

- From a Write with AP command following a CAS Write X command to Power Down entry command.

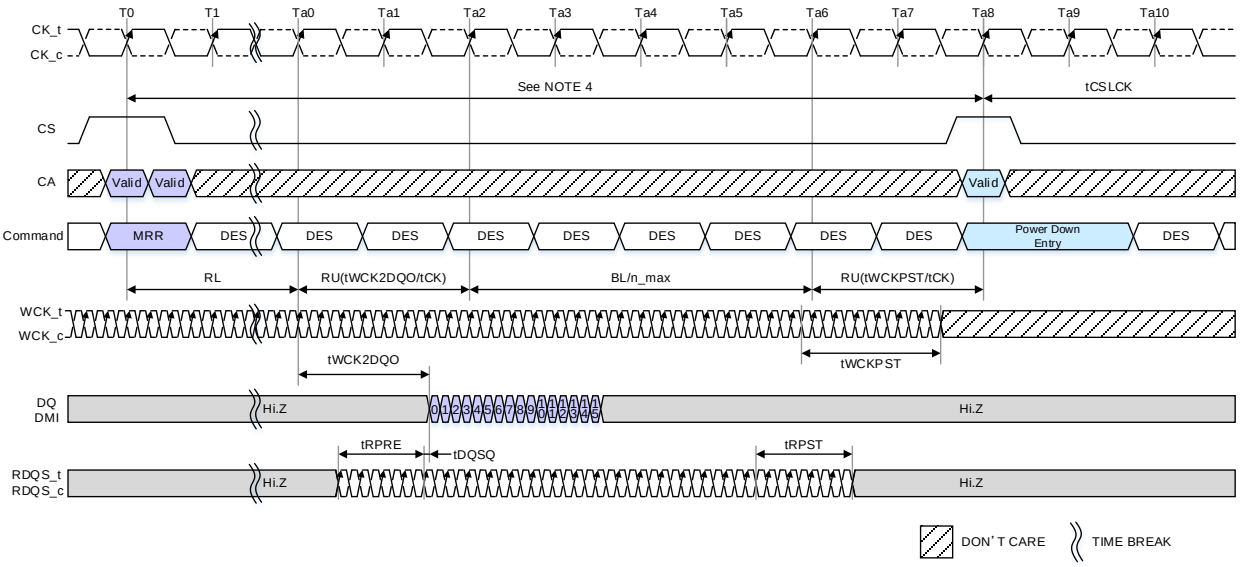


NOTE 1 tWCK2CK is 0ps in this instance.
NOTE 2 Power Down Entry Command is not allowed until the end of the burst operation.
NOTE 3 Assumption: tWCK2DQO=1900ps, tCK=1250ps, tRPST = 4.5nWCK, tWCKPST = 6.5nWCK
NOTE 4 RL+RU(tWCK2DQO(max)/tCK)+BL/n_max+RU(tWCKPST/tCK)
NOTE 5 tWCK2DQO(max) is applied tWCK2DQO_LF(max) or tWCK2DQO_HF(max) depending on MR18 OP[3]: WCK Frequency Mode setting.
MR18 OP[3]=$0_B$: tWCK2DQO_LF(max) MR18 OP[3]=$1_B$: tWCK2DQO_HF(max)
NOTE 6 Input clock frequency can be changed or the input clock can be stopped or floated after tCSLCK from Power Down command.

**Figure 132 - Mode Register Read to Power-Down Entry: 8B Mode CKR=4:1**

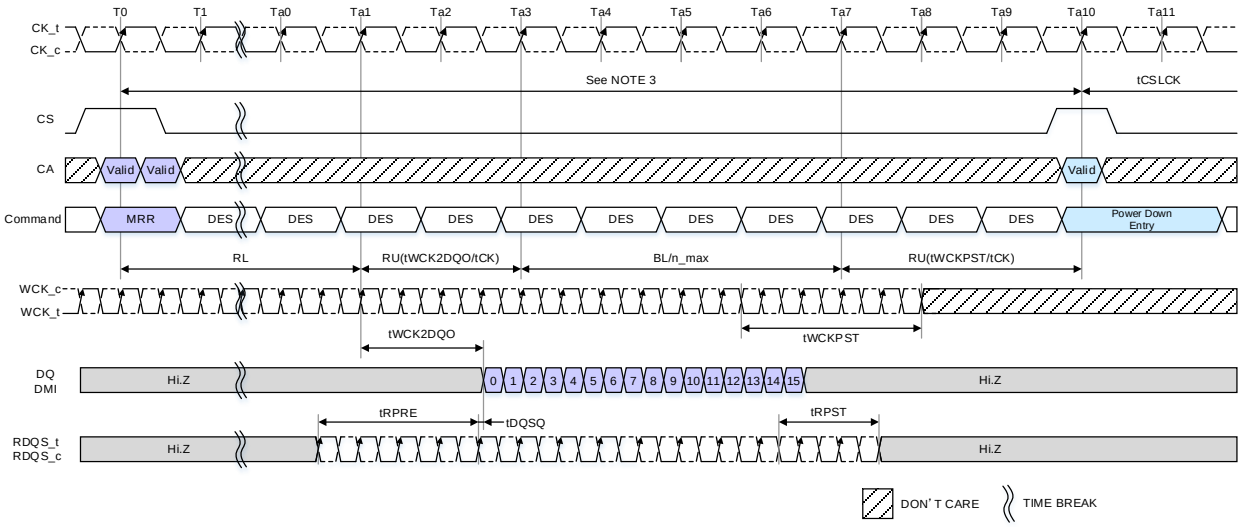


NOTE 1 tWCK2CK is 0ps in this instance.
NOTE 2 Assumption: tWCK2DQO=1900ps, tCK=1250ps, tRPST = 2.5nWCK, tWCKPST = 4.5nWCK
NOTE 3 RL+RU(tWCK2DQO(max)/tCK)+BL/n_max+RU(tWCKPST/tCK)
NOTE 4 tWCK2DQO(max) is applied tWCK2DQO_LF(max) or tWCK2DQO_HF(max) depending on MR18 OP[3]: WCK Frequency Mode setting.
MR18 OP[3]=$0_B$: tWCK2DQO_LF(max) MR18 OP[3]=$1_B$: tWCK2DQO_HF(max)
NOTE 5 Input clock frequency can be changed or the input clock can be stopped or floated after tCSLCK from Power Down command.

**Figure 133 - Mode Register Read to Power-Down Entry: 16B Mode CKR=2:1**

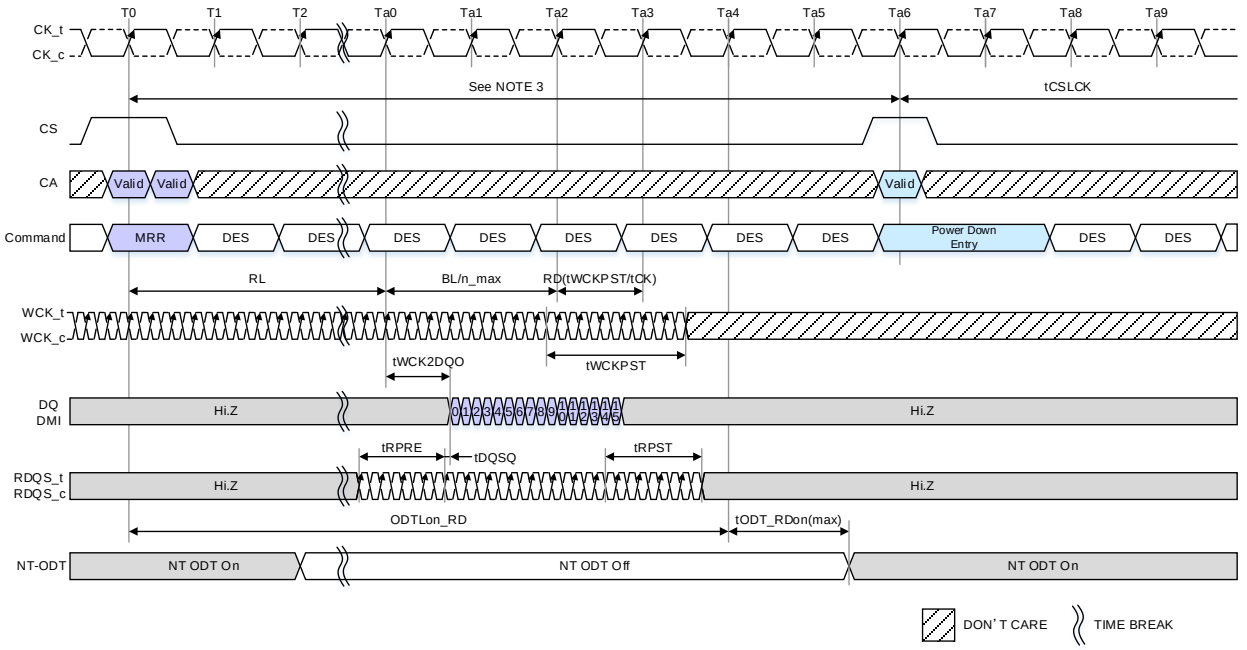


NOTE 1 tWCK2CK is 0ps in this instance.
NOTE 2 tRPST = 4.5nWCK, tWCKPST = 6.5nWCK
NOTE 3 ODTLon_RD+RU(tODT_RDon(max)/tCK)
NOTE 4 Input clock frequency can be changed or the input clock can be stopped or floated after tCSLCK from Power Down command.

**Figure 134 - Mode Register Read to Power-Down Entry: 16B Mode CKR=4:1 NT-ODT=Enable**

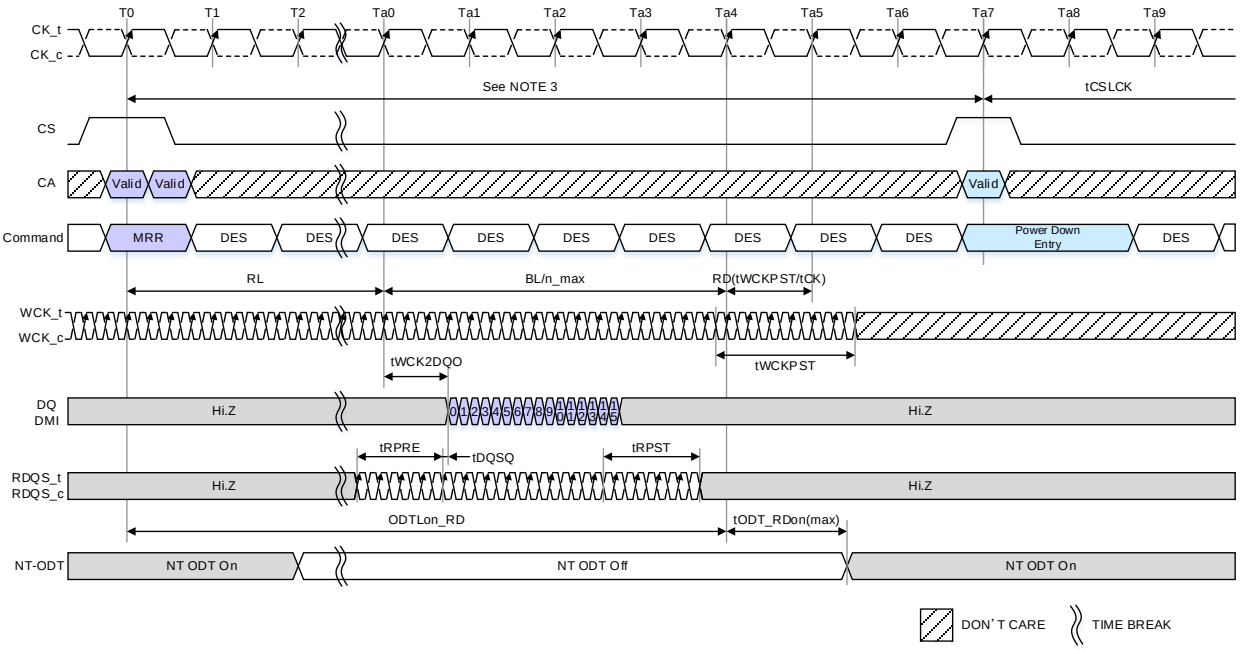


NOTE 1 tWCK2CK is 0ps in this instance.
NOTE 2 tRPST = 4.5nWCK, tWCKPST = 6.5nWCK
NOTE 3 ODTLon_RD+RU(tODT_RDon(max)/tCK) +1nCK
NOTE 4 Input clock frequency can be changed or the input clock can be stopped or floated after tCSLCK from Power Down command.

**Figure 135 - Mode Register Read to Power-Down Entry: BG Mode CKR=4:1 NT-ODT=Enable**

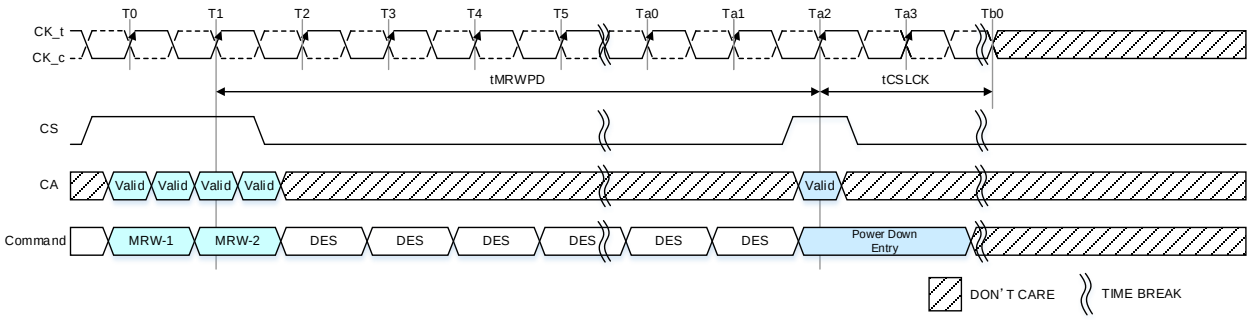


NOTE 1 tMRWPD is required to be satisfied.
NOTE 2 This timing is the general definition for Power Down Entry after Mode Register Write Command. When a Mode Register Write Command changes a parameter or starts an operation that requires special timing longer than tMRWPD, that timing is required to be satisfied before Power Down Entry Command is issued. Changing the $V_{REF}$(DQ) value is one example, in this case the appropriate $V_{REF}$_time Short/Middle/Long is required to be satisfied.
NOTE3 MRW-1/2 command includes DCM stop command.

**Figure 136 - Mode Register Write to Power Down Entry**

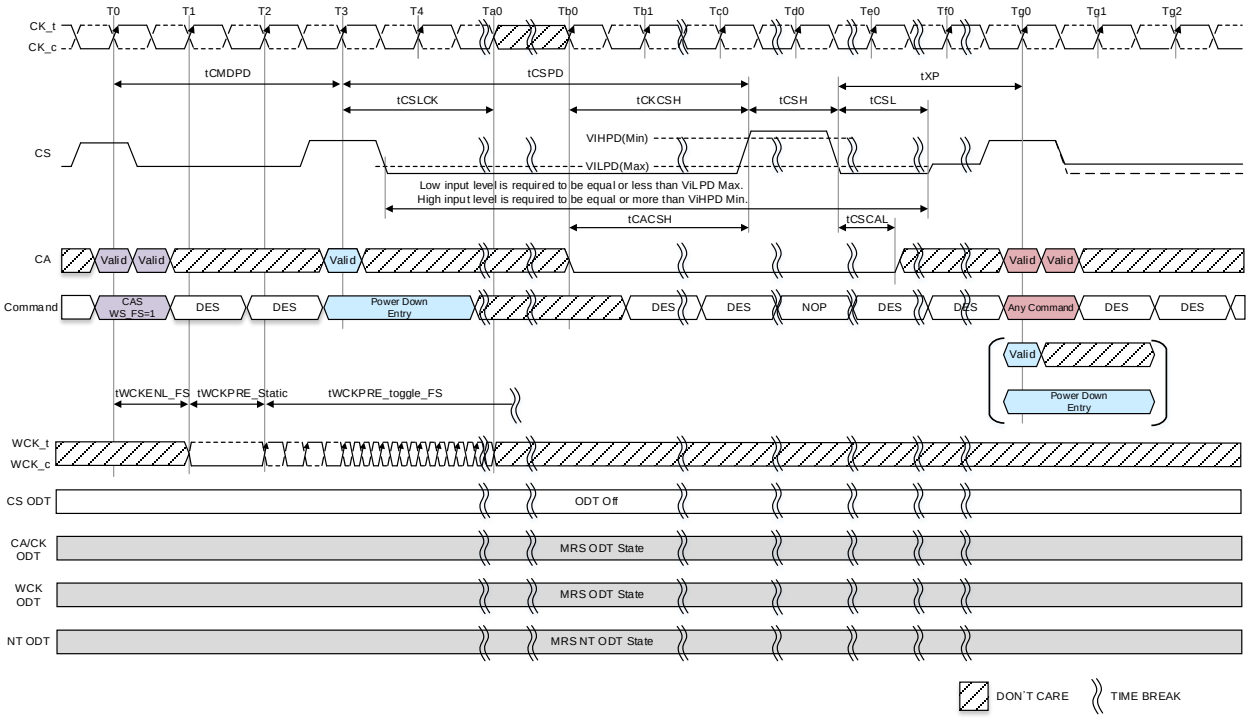


NOTE 1 tWCK2CK is 0ps in this instance
NOTE 2 tWCKENL_FS=1nCK, tWCKPRE_Static=1nCK
NOTE 3 WCK input is required to be continued at least the end of tCSLCK.

**Figure 137 – CAS(WS_FS) to Power Down Entry**

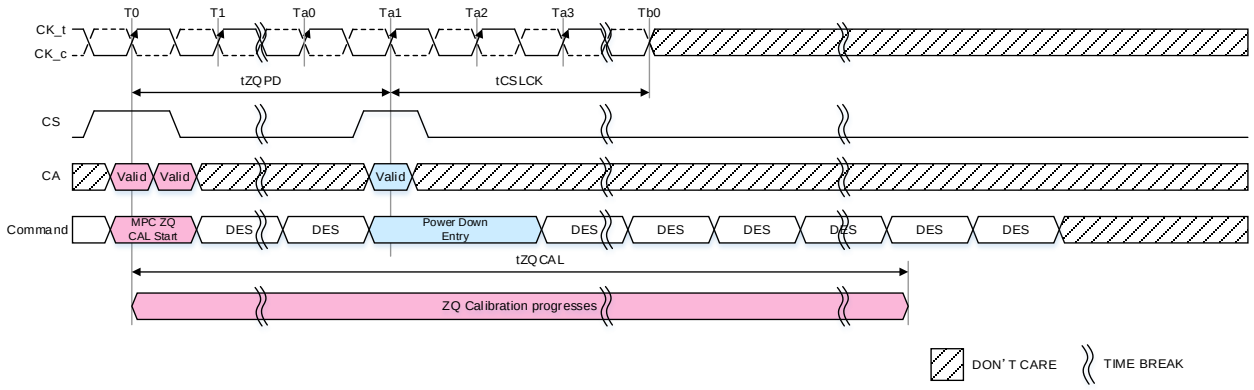


NOTE 1 ZQ Calibration continues if Power Down Entry Command is issued after tZQPD is satisfied.

**Figure 138 - Multi Purpose Command for Start ZQ Calibration to Power-Down Entry**

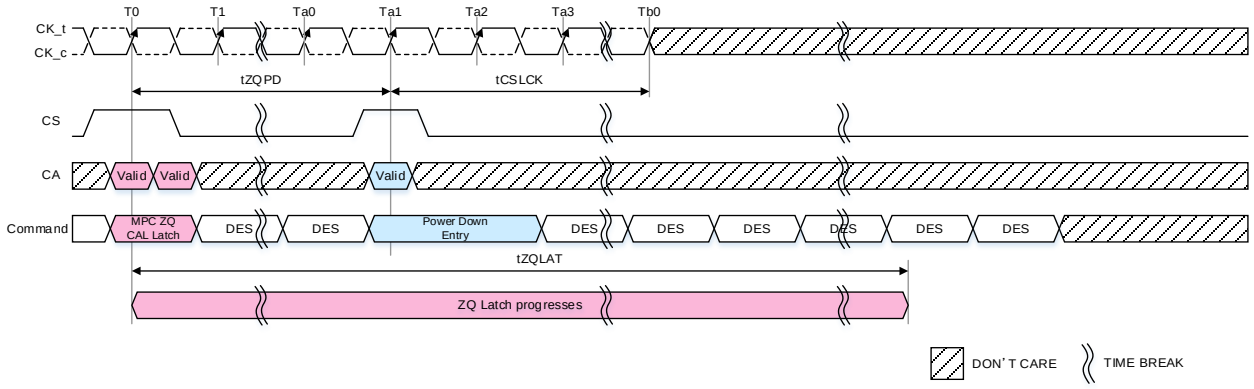


NOTE 1 ZQ Latch continues if Power Down Entry Command is issued after tZQPD is satisfied.

**Figure 139 - Multi Purpose Command for ZQ Latch Command to Power-Down Entry**

Power Down Entry command can be issued after tCMDPD is satisfied, even though the Oscillator is running. However, in this case, the value of Oscillator Count in MR35/36 (38/39) will be lost. If the value of Oscillator Count in Mode Register is to be retained, the entering power down timing should satisfy the following timing.

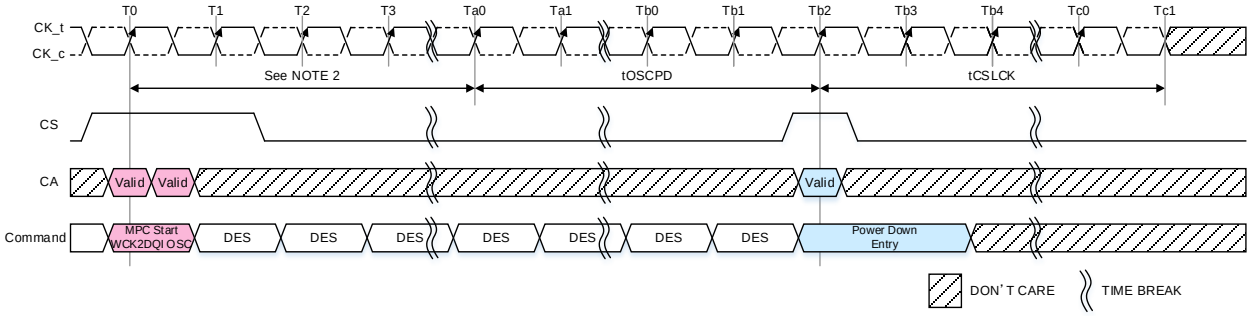


NOTE 1 WCK2DQI interval timer run time setting: MR37 OP[7:0]≠00000000$_B$.
NOTE 2 Setting counts of WCK2DQI interval timer run time setting: MR37 OP[7:0]

**Figure 140 - MPC for Start WCK2DQI Interval Oscillator to Power-Down Entry**

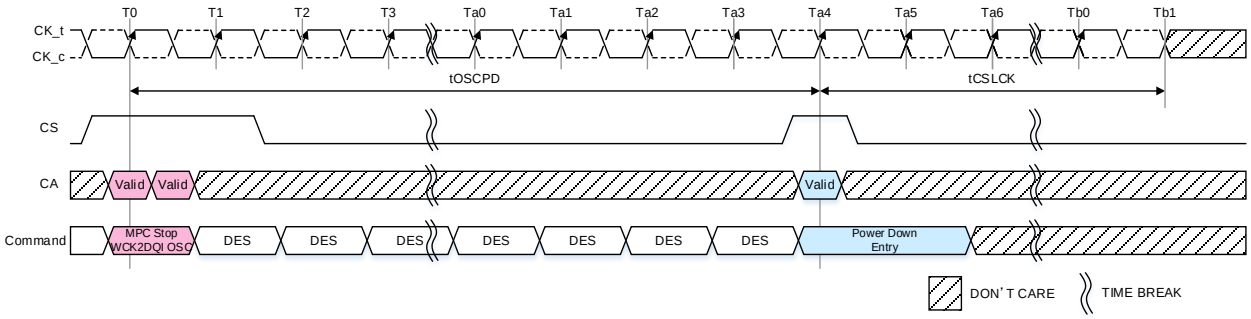


NOTE 1 WCK2DQI interval timer run time setting: MR37 OP[7:0]=00000000$_B$.

**Figure 141 - MPC for Stop WCK2DQI Interval Oscillator to Power-Down Entry**

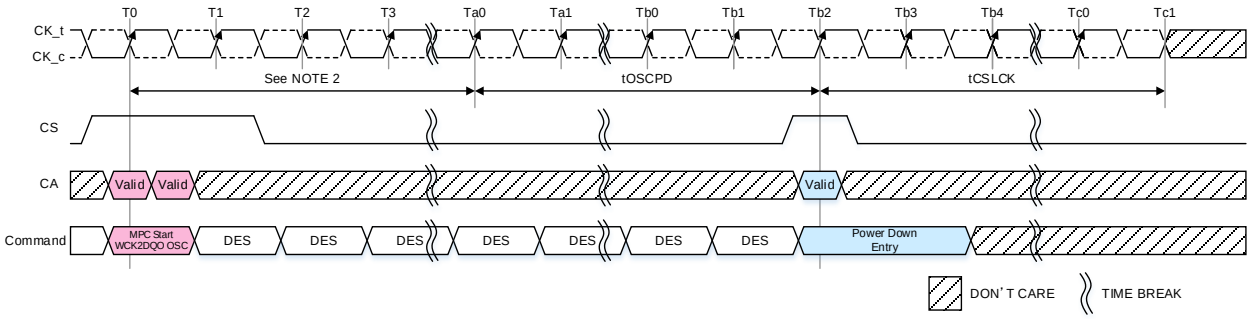


NOTE 1 WCK2DQO interval timer run time setting: MR40 OP[7:0]≠00000000$_B$.
NOTE 2 Setting counts of WCK2DQO interval timer run time setting: MR40 OP[7:0]

**Figure 142 - MPC for Start WCK2DQO Interval Oscillator to Power-Down Entry**

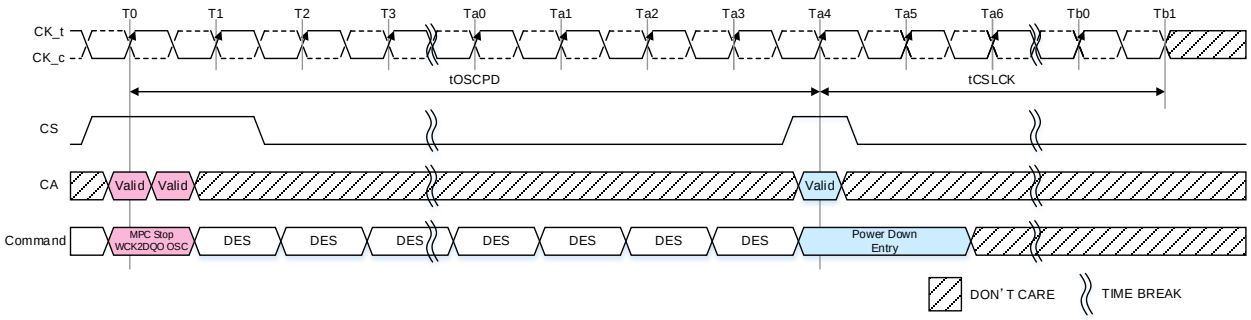


NOTE 1 WCK2DQO interval timer run time setting: MR40 OP[7:0]=00000000$_B$.

**Figure 143 - MPC for Stop WCK2DQO Interval Oscillator to Power-Down Entry**

**Table 216 - Power Down AC Timing**

| Parameter | Symbol | Min/ Max | Data Rate | Unit | Note |
|---|---|---|---|---|---|
| Power-Down Timing | | | | | |
| Delay time from PDE to CS goes High | tCSPD | Min. | 10.0ns + 1tCK | ns | 1,2 |
| Delay from valid command to PDE | tCMDPD | Min. | 3nCK | nCK | 3 |
| Valid Clock Requirement after PDE | tCSLCK | Min. | Max(5ns, 3nCK) | ns | 1 |
| Valid Clock Requirement before CS goes High | tCKCSH | Min. | 2nCK | nCK | |
| Valid Low Requirement for CA before CS goes High | tCACSH | Min | 1.75ns | ns | |
| Exit Power-Down to next valid command delay | tXP | Min. | Max(7ns, 3nCK) | ns | 1 |
| Minimum CS High Pulse width @ PDX | tCSH | Min. | 3 | ns | |
| Minimum CS Low Duration time @ PDX | tCSL | Min. | 4 | ns | |
| Minimum CA Low Duration time @ PDX | tCSCAL | Min | 1.75 | ns | |
| Delay from MRW command to PDE | tMRWPD | Min. | Max(14ns, 6nCK) | ns | 1,4 |
| Delay from ZQ Calibration Start/Latch Command to PDE | tZQPD | Min. | 3nCK | ns | |
| Delay from MPC OSC Start/Stop Command to PDE | tOSCPD | Min | Max(40ns,8nCK) | ns | |
| Delay from PD/DSM Entry to CS ODT OFF | tPDECSODTOFF | Max | 10ns + 1tCK | ns | 2 |
| Delay from Power Down Exit to CS ODT ON | tPDXCSODTON | Max | 20 | Ns | |

NOTE 1 Delay time has to satisfy both analog time(ns) and clock count(nCK).
For example, tCSLCK will not expire until CK has toggled through at least 3 full cycles(3*tCK) and 5ns has transpired.
The case which 3nCK is applied to is shown below.

NOTE 2 The tCK value where is the operating frequency at issuing the PDE command.

NOTE 3 The SRX command is included in the valid command and the SRE command is not included in the valid command.

NOTE 4 Following MR change applies special delay time. See Table 219 for detail.
VREF(CA) Setting: MR12 OP[6:0]
VREF Current Generator (VRCG): MR16 OP[6]

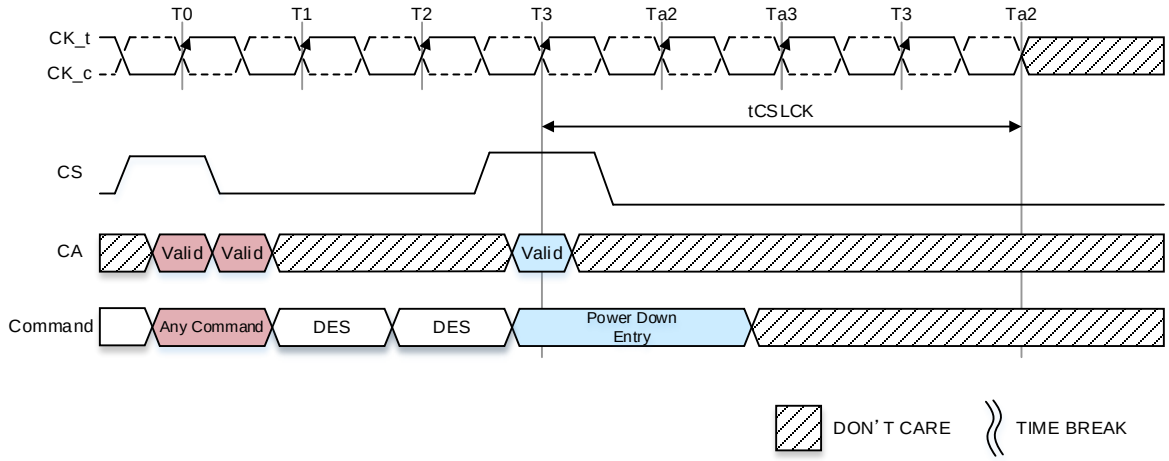


**Table 217 - Read and Read w/ Precharge to Power Down Entry: NT ODT is Disabled**

| RDQS Mode | CKR | Bank/BG ORG. | Read and Read w/ Precharge to Power Down Entry | Unit |
|---|---|---|---|---|
| Disable | 2:1 | 16B | RL+RU(tWCK2DQO/tCK)+BL/n_max+RU(tWCKPST/tCK) | nCK |
| Disable | 2:1 | 8B | | |
| Disable | 4:1 | BG | | |
| Disable | 4:1 | 16B | | |
| Disable | 4:1 | 8B | | |
| Enable | 2:1 | 16B | | |
| Enable | 2:1 | 8B | | |
| Enable | 4:1 | BG | | |
| Enable | 4:1 | 16B | | |
| Enable | 4:1 | 8B | | |

NOTE 1 tWCK2DQO(max) is applied tWCK2DQO_LF(max) or tWCK2DQO_HF(max) depending on MR18 OP[3]: WCK Frequency Mode setting.
MR18 OP[3]=$0_B$: tWCK2DQO_LF(max)
MR18 OP[3]=$1_B$: tWCK2DQO_HF(max)

**Table 218 - Read and Read w/ Precharge to Power Down Entry: NT ODT is Enabled**

| RDQS Mode | CKR | Bank/BG ORG. | Read and Read w/ Precharge to Power Down Entry | Unit |
|---|---|---|---|---|
| Disable | 2:1 | 16B | ODTLon_RD+RU(tODT_RDon(max)/tCK)+2 | nCK |
| Disable | 2:1 | 8B | | |
| Disable | 4:1 | BG | ODTLon_RD+RU(tODT_RDon(max)/tCK)+2 | nCK |
| Disable | 4:1 | 16B | ODTLon_RD+RU(tODT_RDon(max)/tCK) | nCK |
| Disable | 4:1 | 8B | | |
| Enable | 2:1 | 16B | ODTLon_RD+RU(tODT_RDon(max)/tCK) | nCK |
| Enable | 2:1 | 8B | | |
| Enable | 4:1 | BG | ODTLon_RD+RU(tODT_RDon(max)/tCK)+1 | nCK |
| Enable | 4:1 | 16B | ODTLon_RD+RU(tODT_RDon(max)/tCK) | nCK |
| Enable | 4:1 | 8B | | |

Read and Read with AP to Power-Down Entry timing also applies following case.

- Read FIFO command to Power Down entry command
- Read DQ Calibration command to Power Down entry command
- Mode Register Read command to Power Down entry command

**Table 219 – Special timing to Mode Register Write to Power Down Entry**

| Current Command | Next Command | Timing Constraints (Min) | Note |
|---|---|---|---|
| MRW to VREF(CA) Setting | Power Down Entry | tVREFCA_Long(max)=250ns<br>tVREFCA_Short(max)=200ns<br>tVREFCA_Weak(max)=1ms | |
| MRW to VREF(DQ) Setting | | tVREFDQ_Long(max)=250ns<br>tVREFDQ_Short(max)=200ns<br>tVREFDQ_Weak(max)=1ms | |
| MRW to VRCG Enable | | VRCG_ENABLE(max) = 150ns | |
| MRW to VRCG Disable | | tVRCG_DISABLE(max) = 100ns | |

### 7.5.8 Deep Sleep Mode

Deep Sleep Mode is an additional Self-Refresh mode with longer Entry/Exit times allowing the SDRAM to manage internal circuits for low current consumption (specified by IDD6DS). Deep Sleep Mode is entered by Self Refresh Entry Command defined by having CS HIGH, CA[2:0] LOW, CA3 HIGH, CA4 LOW, CA5 HIGH and CA6 HIGH at the rising edge of the clock and CS don't care, CA[4:0] Valid (Valid that means it is Logic Level, High or Low), CA5 HIGH and CA6 LOW at the falling edge of the clock. Deep Sleep Mode is only allowed when read data burst is completed and SDRAM is idle state or Self Refresh state. Deep Sleep Mode state diagram is shown below.

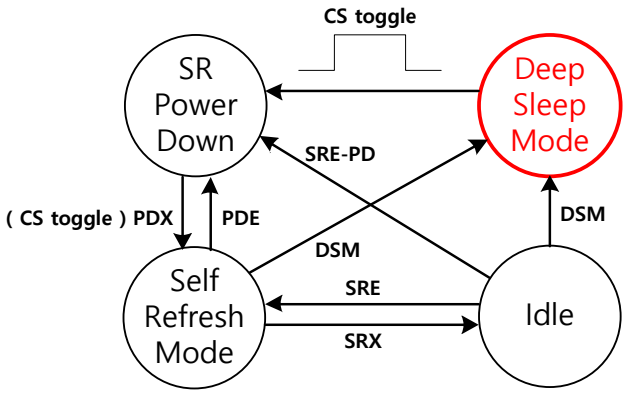


**Figure 144 - Deep Sleep Mode state diagram**

Once the SDRAM is entered in Deep Sleep Mode, it is recommended that Deep Sleep Mode is maintained for relatively long time to reduce Self Refresh current more efficiently. It is functionally possible that SDRAM is exited quickly after Deep Sleep Mode issued. But, the short Deep Sleep Mode duration time is of little avail to reduce IDD6 Current. tPDN_DSM is the minimum recommendatory time for Deep Sleep Mode duration.

In Deep Sleep Mode, SDRAM is almost turned off except for Self-refresh operation parts, it means that the data is retained during Deep Sleep mode. Deep Sleep Mode state is asynchronously exited to Self-Refresh Power Down mode when CS toggles HIGH (VIHPD (Min.)). The SDRAM must be satisfied tXSR_DSM to be fully re-powered up and then the SDRAM is ready for normal operations.

When CA, CK ODT is enabled via MR11 OP[6:4], MR17 OP[3] and OP[5], the rank providing ODT will continue to terminate CA, CK bus in all SDRAM states including Active Self-refresh, Self-refresh Power-down, Active Power-down, Idle Power-down and Deep Sleep Mode. CS ODT is enabled via MR17 OP[4], the rank providing ODT will continue to terminate the CS input in all DRAM states except Idle Power-down, Active Power-down, Self-refresh Power-down and Deep Sleep Mode. CS ODT state goes OFF ignoring MRS ODT state after Power-Down Entry is issued and returns to MRS ODT state with Power-Down Exit.
When NT-ODT is enabled via MR11 OP[3] and MR41 OP[7:5], SDRAM provides its NT-ODT termination during Deep Sleep Mode to guarantee other ranks stable operation.

LPDDR5 SDRAM can operate in Deep Sleep Mode in both the standard or elevated temperature ranges. SDRAM will also manage Self Refresh power consumption when the operating temperature changes lower at low temperature and higher at high temperature.

Deep Sleep Mode entry and exit are shown in **Figure 145** and the related AC timing parameters are defined in **Table 220**.

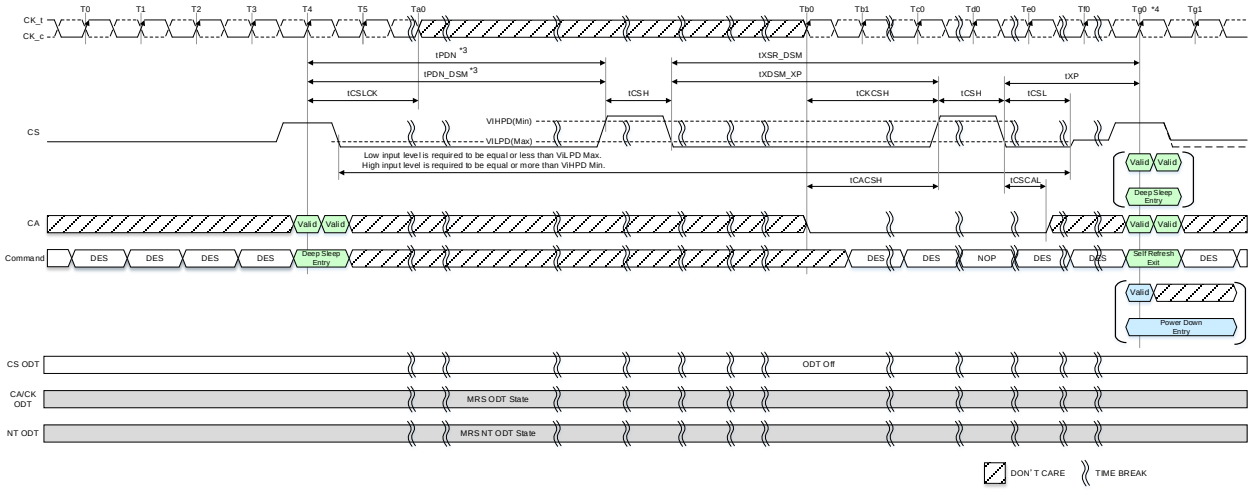


NOTE 1 Input clock frequency can be changed or the input clock can be stopped or floated after tCSLCK satisfied and during power-down, provided that upon exiting power-down, the clock is stable and within specified limits for a minimum of tCKCSH of stable clock prior to power-down exit and the clock frequency is between the minimum and maximum specified frequency for the speed grade in use.

NOTE 2 VIHPD(Min) and VILPD(Max) level of CS is 550mV/130mV.

NOTE 3 tPDN and tPDN_DSM indicate different periods.
- tPDN: Minimum interval between Deep Sleep Mode Entry and Exit
- tPDN_DSM: Minimum Deep Sleep Mode duration time for SDRAM compliance with IDD6DS power specification.

NOTE 4 SDRAM can accept the following commands; PDE, DSM, MRR, CAS, DES, SRX, MPC, RFF, WFF, RDC and MRW except PASR setting after Tg0.

NOTE 5 CA input is required to be Low during tCSH.

**Figure 145 - Deep Sleep Mode Entry in IDLE state and Exit Timing: CS ODT Disable**

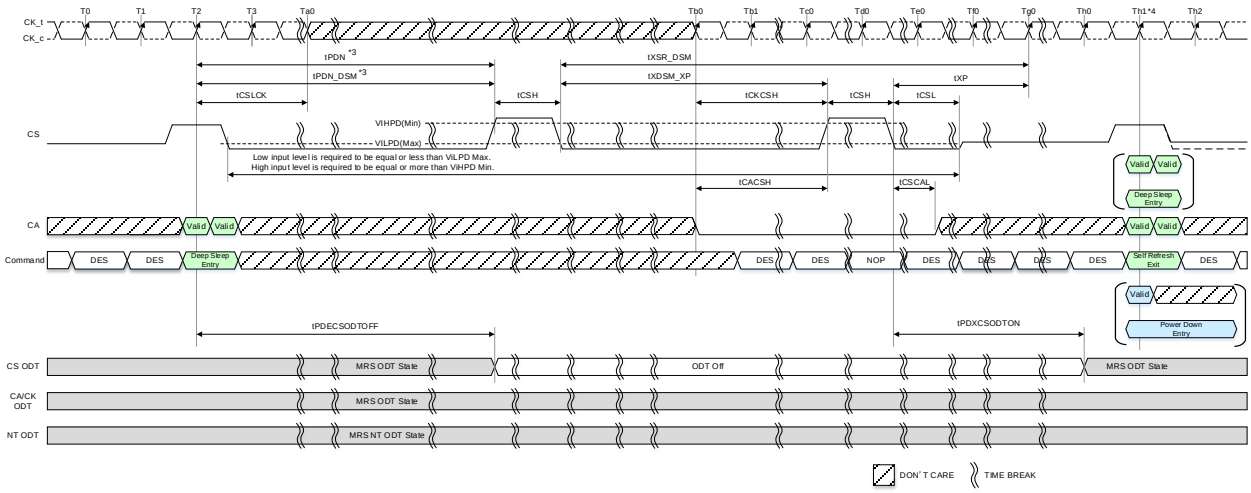


NOTE 1 Input clock frequency can be changed or the input clock can be stopped or floated after tCSLCK satisfied and during power-down, provided that upon exiting power-down, the clock is stable and within specified limits for a minimum of tCKCSH of stable clock prior to power-down exit and the clock frequency is between the minimum and maximum specified frequency for the speed grade in use.

NOTE 2 VIHPD(Min) and VILPD(Max) level of CS is 550mV/130mV.

NOTE 3 tPDN and tPDN_DSM indicate different periods.

- tPDN: Minimum interval between Deep Sleep Mode Entry and Exit
- tPDN_DSM: Minimum Deep Sleep Mode duration time for SDRAM compliance with IDD6DS power specification.

NOTE 4 SDRAM can accept the following commands; PDE, DSM, MRR, CAS, DES, SRX, MPC, RFF, WFF, RDC and MRW except PASR setting after Th1.

NOTE 5 CA input is required to be Low during tCSH.

**Figure 146 - Deep Sleep Mode Entry in IDLE state and Exit Timing: CS ODT Enable**

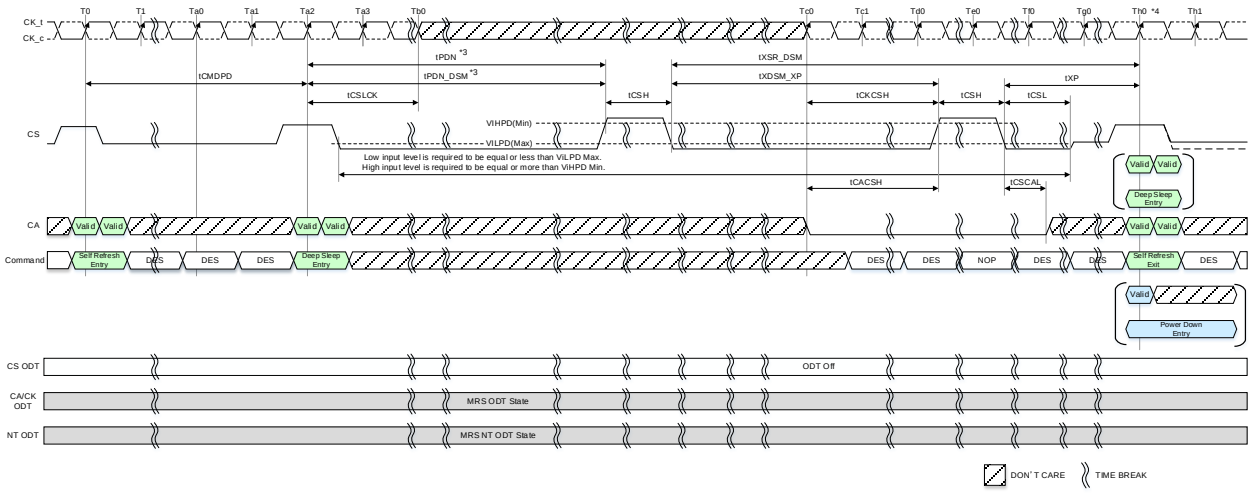


NOTE 1 Input clock frequency can be changed or the input clock can be stopped or floated after tCSLCK satisfied and during power-down, provided that upon exiting power-down, the clock is stable and within specified limits for a minimum of tCKCSH of stable clock prior to power-down exit and the clock frequency is between the minimum and maximum specified frequency for the speed grade in use.

NOTE 2 VIHPD(Min) and VILPD(Max) level of CS is 550mV/130mV.

NOTE 3 tPDN and tPDN_DSM indicate different periods.
- tPDN: Minimum interval between Deep Sleep Mode Entry and Exit
- tPDN_DSM: Minimum Deep Sleep Mode duration time for SDRAM compliance with IDD6DS power specification.

NOTE 4 SDRAM can accept the following commands; PDE, DSM, MRR, CAS, DES, SRX, MPC, RFF, WFF, RDC and MRW except PASR setting after Th0.

NOTE 5 CA input is required to be Low during tCSH.

**Figure 147 - Deep Sleep Mode Entry in Self Refresh state and Exit Timing: CS ODT Disable**

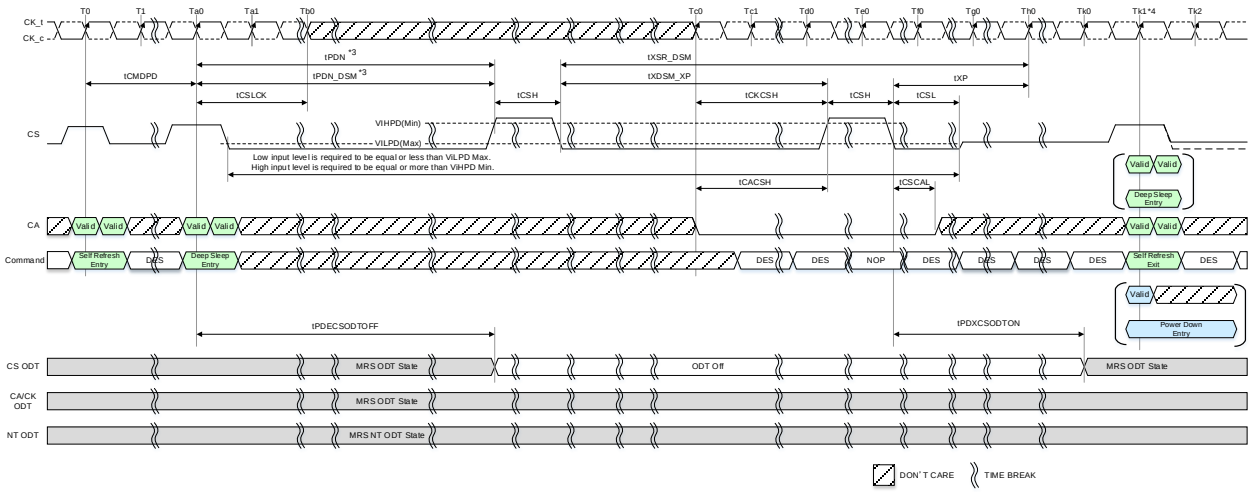


NOTE 1 Input clock frequency can be changed or the input clock can be stopped or floated after tCSLCK satisfied and during power-down, provided that upon exiting power-down, the clock is stable and within specified limits for a minimum of tCKCSH of stable clock prior to power-down exit and the clock frequency is between the minimum and maximum specified frequency for the speed grade in use.

NOTE 2 VIHPD(Min) and VILPD(Max) level of CS is 550mV/130mV.

NOTE 3 tPDN and tPDN_DSM indicate different periods.
- tPDN: Minimum interval between Deep Sleep Mode Entry and Exit
- tPDN_DSM: Minimum Deep Sleep Mode duration time for SDRAM compliance with IDD6DS power specification.

NOTE 4 SDRAM can accept the following commands; PDE, DSM, MRR, CAS, DES, SRX, MPC, RFF, WFF, RDC and MRW except PASR setting after Tk1.

NOTE 5 CA input is required to be Low during tCSH.

**Figure 148 - Deep Sleep Mode Entry in Self Refresh state and Exit Timing: CS ODT Enable**

**Table 220 - Deep Sleep Mode AC Timing Table**

| Parameter | Symbol | Min/ Max | Data Rate | Unit | Note |
|---|---|---|---|---|---|
| Deep Sleep Mode Timing | | | | | |
| Minimum interval between Deep Sleep Mode Entry and Exit | tPDN | Min | 10ns + 1tCK | ns | 1 |
| Minimum Deep Sleep Mode duration time for SDRAM compliance with IDD6DS power specification | tPDN_DSM | Min. | 4 | ms | |
| Delay from Deep Sleep Mode Exit to SRX | tXSR_DSM | Min. | 200 | us | |
| Delay from Deep Sleep Mode Exit to Power-Down Exit | tXDSM_XP | Min. | 190 | us | |
| Delay from PD/DSM entry to CS ODT OFF | tPDECSODTOFF | Max | 10ns + 1tCK | ns | 1 |
| Delay from Power Down Exit to CS ODT ON | tPDXCSODTON | Max | 20 | ns | |

NOTE 1 1tCK for this timing is the tCK value of the operating frequency when the DSM Entry command is issued.

## 7.6 Other Operation

### 7.6.1 Mode Register Read

The Mode Register Read (MRR) command is used to read configuration and status data from the LPDDR5-SDRAM registers. The MRR command is initiated with CS and CA[6:0] in the proper state as defined by the Command Truth Table, **Table 178**. The mode register address operands (MA[6:0]) allow the user to select one of 128 registers. The mode register contents are available on the first 8 UI's data bits of DQ[7:0] after RL + tWCK2DQO following the MRR command. Subsequent data bits contain valid but undefined content. WCK is toggled for the duration of the Mode Register READ burst. MRR has a command burst length 16 regardless of bank group, 16bank or 8bank mode.

In byte mode, the lower byte device follows the DQ output mapping in Table 221 because only DQ[7:0] is used to show the output from mode register. The upper byte device follows the DQ output mapping in Table 222 (MRR data).

MRR operation must not be interrupted.

**Table 221 — DQ Output Mapping for lower byte**

| UI | 0 | 1 | 2 | 3 | 4 | 5 | 6 | 7 | 8 | 9 | 10 | 11 | 12 | 13 | 14 | 15 |
|---|---|---|---|---|---|---|---|---|---|---|---|---|---|---|---|---|
| DQ0 | OP0 | | | | | | | | V | | | | | | | |
| DQ1 | OP1 | | | | | | | | V | | | | | | | |
| DQ2 | OP2 | | | | | | | | V | | | | | | | |
| DQ3 | OP3 | | | | | | | | V | | | | | | | |
| DQ4 | OP4 | | | | | | | | V | | | | | | | |
| DQ5 | OP5 | | | | | | | | V | | | | | | | |
| DQ6 | OP6 | | | | | | | | V | | | | | | | |
| DQ7 | OP7 | | | | | | | | V | | | | | | | |
| DQ[15:8] | V | | | | | | | | | | | | | | | |
| DMI[1:0] | V | | | | | | | | | | | | | | | |

NOTE 1 MRR data is extended to first 8 UI's for DRAM controller to sample data easily.
NOTE 2 The read preamble and post amble of MRR are the same as normal read operation.

### 7.6.1 Mode Register Read (Cont'd)

**Table 222 — DQ Output Mapping for upper byte**

| UI | 0 | 1 | 2 | 3 | 4 | 5 | 6 | 7 | 8 | 9 | 10 | 11 | 12 | 13 | 14 | 15 |
|---|---|---|---|---|---|---|---|---|---|---|---|---|---|---|---|---|
| DQ[7:0] | V | | | | | | | | | | | | | | | |
| DQ8 | OP0 | | | | | | | | V | | | | | | | |
| DQ9 | OP1 | | | | | | | | V | | | | | | | |
| DQ10 | OP2 | | | | | | | | V | | | | | | | |
| DQ11 | OP3 | | | | | | | | V | | | | | | | |
| DQ12 | OP4 | | | | | | | | V | | | | | | | |
| DQ13 | OP5 | | | | | | | | V | | | | | | | |
| DQ14 | OP6 | | | | | | | | V | | | | | | | |
| DQ15 | OP7 | | | | | | | | V | | | | | | | |
| DMI[1:0] | V | | | | | | | | | | | | | | | |

NOTE 1 MRR data is extended to first 8 UI's for DRAM controller to sample data easily.
NOTE 2 The read preamble and post amble of MRR are the same as normal read operation.

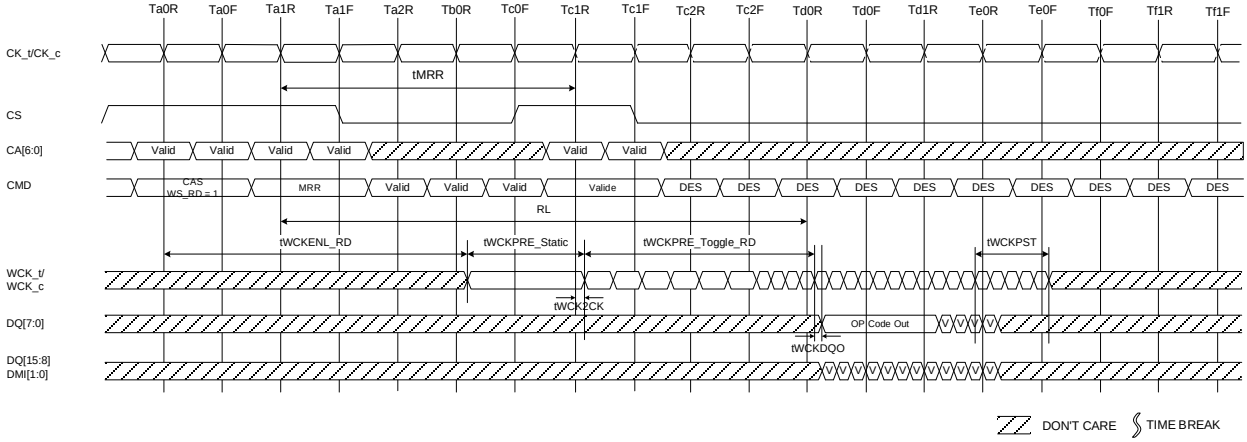


NOTE 1 Only BL=16 is supported.
NOTE 2 Only DES is allowed during tMRR period.
NOTE 3 There are some exception about issuing commands after tMRR. Refer to MRR/MRW Timing Constraints Table for details.
NOTE 4 DBI is disable mode.
NOTE 5 DES commands except tMRR period are shown for ease of illustration; other commands may be valid at these times.
NOTE 6 DQ: VSS termination, WCK: VSS Termination.

**Figure 149 — Mode Register Read Operation**

### 7.6.1.1 MRR after Read and Write Command

After a prior Read Command, the MRR command must not be issued earlier than RL+ BL/n_max + RD(tWCKPST/tCK) +2nCK clock cycles, in a similar way WL + BL/n_max + RU(tWTR/tCK) clock cycles after a prior Write, Write with AP, Masked Write, Masked Write with AP and Write FIFO command in order to avoid the collision of Read and Write burst data on SDRAM's internal Data bus. The timing variable "BL/n_max" is defined in the effective burst length table.

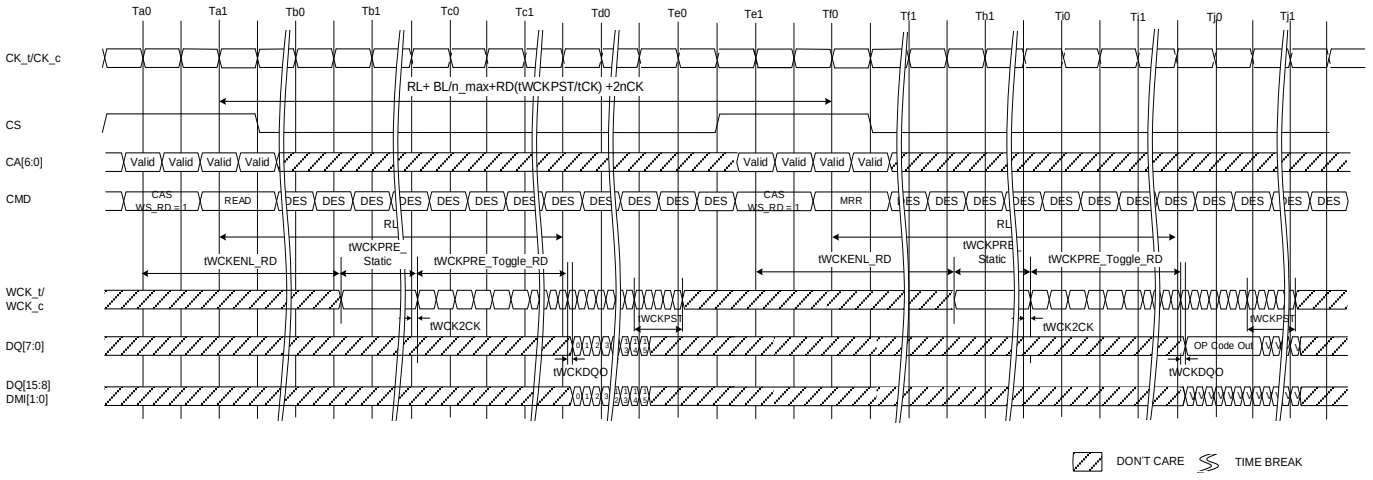


NOTE 1 The minimum number of clock cycles from the burst READ command to the MRR command is RL+ BL/n_max +RD(tWCKPST/tCK) +2nCK. The timing variable "BL/n_max" is defined in the effective burst length table.
NOTE 2 Read BL = 16, MRR BL =16, DQ : VSSQ termination, WCK : VSS Termination.
NOTE 3 DES commands except tMRR period are shown for ease of illustration; other commands may be valid at these times.

**Figure 150 — READ to MRR Timing**

### 7.6.1.1 MRR after Read and Write Command (Cont'd)

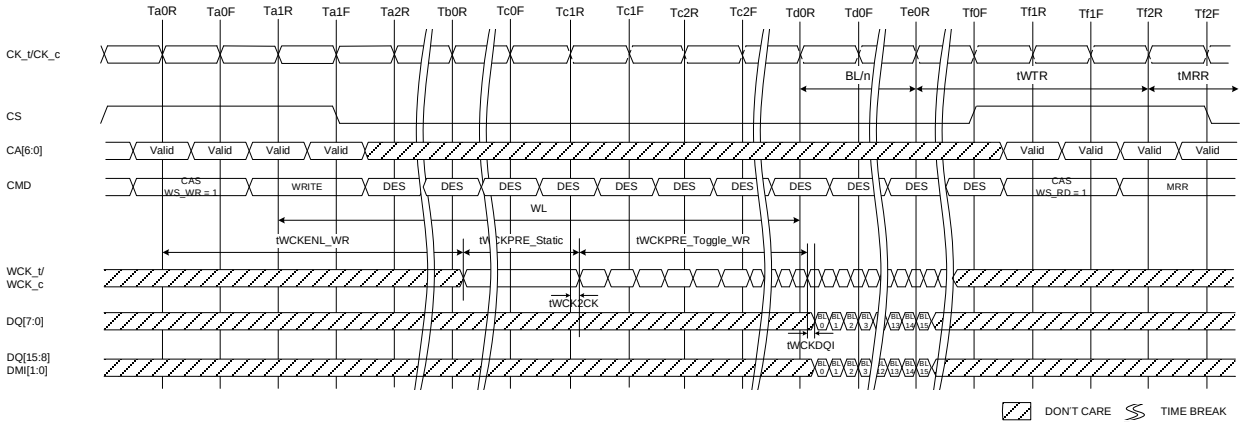


NOTE 1 The minimum number of clock cycles from the burst write command to the MRR command is WL+BL/n_max+RU(tWTR/tCK). The timing variable "BL/n_max" is defined in the effective burst length table.

NOTE 2 Write BL = 16, MRR BL =16, DQ: VSS termination, WCK: VSS Termination.

NOTE 3 Only DES is allowed during tMRR period.

NOTE 4 DES commands except tMRR period are shown for ease of illustration; other commands may be valid at these times.

NOTE 5 tWTR starts at the rising edge of CK after the last latching edge of WCK.

**Figure 151 — WRITE to MRR Timing**

### 7.6.1.2 MRR after Power-Down Exit

Following the power-down state, an additional time, tMRRI, is required prior to issuing the mode register read (MRR) command. This additional time (equivalent to tRCD) is required in order to be able to maximize power-down current savings by allowing more power-up time for the MRR data path after exit from power-down mode.

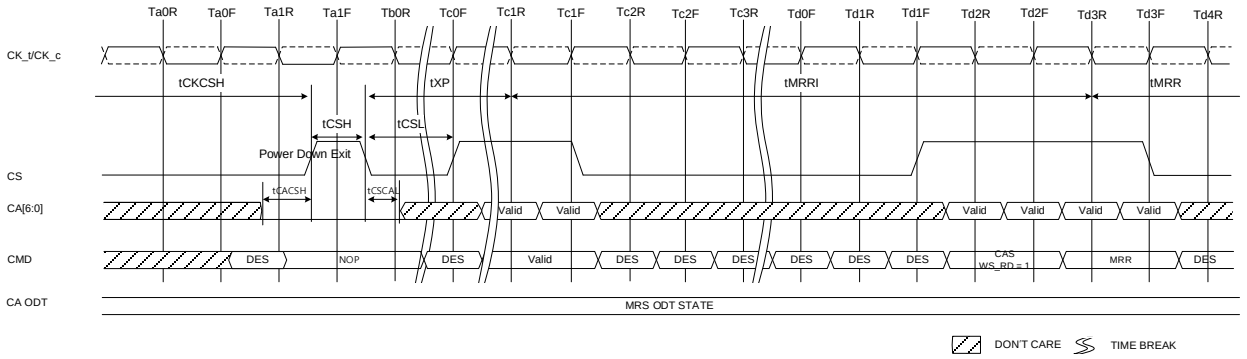


NOTE 1 Only DES is allowed during tMRR period.
NOTE 2 DES commands except tMRR period are shown for ease of illustration; other commands may be valid at these times.

**Figure 152 — MRR Following Power-Down**

**Table 223 — Mode Register Read/Write AC Timing**

| Parameter | Symbol | Min/Max | Data Rate | Unit | Note |
|---|---|---|---|---|---|
| Mode Register Read/Write Timing | | | | | |
| Additional time after tXP has expired until MRR command may be issued | tMRRI | Min. | tRCD + 2nCK | ns | |
| MODE REGISTER READ command period | tMRR | Min. | 4 @ CK:WCK=1:4<br>8 @ CK:WCK=1:2 | nCK | |
| MODE REGISTER WRITE command period | tMRW | Min. | Max (10ns, 5nCK) | ns | |
| Mode register set command delay | tMRD | Min. | Max (14ns, 5nCK) | ns | |

### 7.6.2 Mode Register Write

The Mode Register Write (MRW) command is used to write configuration data to the mode registers. The MRW command is initiated by setting CS and CA[6:0] to valid levels as defined by Command Truth Table, **Table 178**. The mode register address and the data written to the mode registers is contained in CA[6:0]. The Mode Register Write command is composed of two commands, MRW-1 command and MRW-2 command. But, MRW-1 command must be followed by MRW-2 command consecutively. The MRW command period is defined by tMRW. The Mode Register Write command to read-only registers have no impact on the functionality of the device.

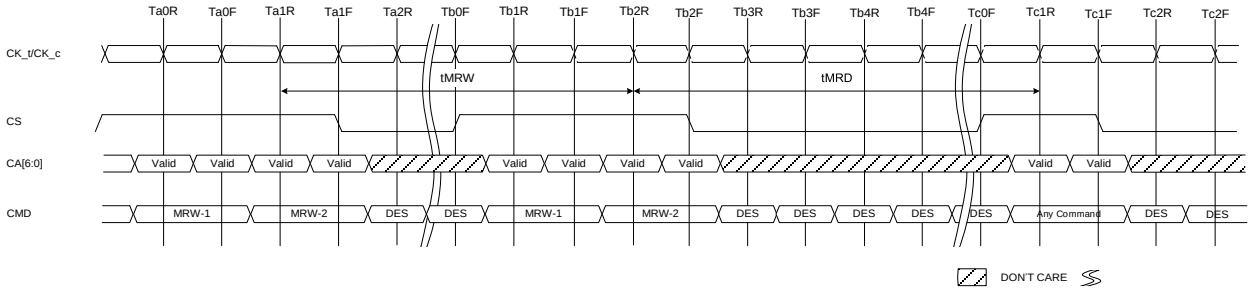


NOTE 1 Only DES command is allowed during tMRW and tMRD periods.

**Figure 153 — Mode Register Write Timing**

**Table 224 — Truth Table for Mode Register Read (MRR) and Mode Register Write (MRW)**

| Current State | Command | Intermediate State | Next State |
|---|---|---|---|
| SDRAM | | SDRAM | SDRAM |
| All Banks Idle | MRR | Mode Register Reading (All Banks Idle) | All Banks Idle |
| | MRW | Mode Register Writing (All Banks Idle) | All Banks Idle |
| Bank(s) Active | MRR | Mode Register Reading | Bank(s) Active |
| | MRW | Mode Register Writing | Bank(s) Active |

#### 7.6.2.1 Mode Register Write Disable control for Byte Mode device

Byte mode device may share their CK_c/CK_t, CS and CA's between upper byte and lower byte od device. Setting MR20 OP[5:4] will allow disabling upper and lower bytes independently for an MRW to the following mode registers. MR20 OP[5:4] (MRW Byte Mode Disable) control specific mode register write operation.

MRW Byte Mode Disable control following mode register OP code.

- MR13 OP[1:0] Thermal Offset
- MR25 OP[5:4] CA BUS TERM, CK BUS TERM
- MR41 OP[4] PPRE
- MR41 OP[7:5] NT DO ODT

### 7.6.3 Frequency Set Point

Frequency Set Points (FSP) allow the LPDDR5 SDRAM CA Bus to be switched between three differing operating frequencies, with changes in voltage swings and termination values, without ever being in an untrained state which could result in a loss of communication to the SDRAM. This is accomplished by duplicating all CA Bus mode register parameters, as well as other mode register parameters commonly changed with operating frequency. These tripled registers form three sets that use the same mode register addresses, with read/write access controlled by MR bit FSP-WR (Frequency Set-Point Write/Read) and the DRAM operating point controlled by another MR bit FSP-OP (Frequency Set-Point Operation). Changing the FSP-WR bit allows MR parameters to be changed for a selected Frequency Set-Point without affecting the LPDDR5-SDRAM's current operation. Once all necessary parameters have been written to the selected Set-Point, changing the FSP-OP bit will switch operation to use all of the new parameters simultaneously (within tFC), eliminating the possibility of a loss of communication that could be caused by a partial configuration change.

Parameters which have three physical registers controlled by FSP-WR and FSP-OP include:

**Table 225 - Mode Register Function with three physical registers**

| MR# | Operand | Function | Note |
|---|---|---|---|
| MR1 | OP[3] | CK mode | |
| | OP[7:4] | WL (Write Latency) | |
| MR2 | OP[3:0] | RL (Read latency) and nRBTP(READ burst end to PRECHARGE delay) | |
| | OP[7:4] | nWR(Write-Recovery for Auto-Precharge commands) | |
| MR3 | OP[2:0] | PDDS (Pull-Down Drive Strength) | |
| | OP[4:3] | BK/BG ORG (Bank/Bank Group Organization) | |
| | OP[5] | WLS (Write Latency Set) | |
| | OP[6] | DBI-RD (DBI-Read select) | |
| | OP[7] | DBI-WR (DBI-Write select) | |
| MR10 | OP[0] | RDQS Post-amble mode | |
| | OP[3:2] | WCK PST (WCK Post-amble Length) | |
| | OP[5:4] | RDQS PRE (RD Pre-amble Length) | |
| | OP[7:6] | RDQS PST (RD Post-amble Length) | |
| MR11 | OP[2:0] | DQ ODT (DQ Bus Receiver On-Die-Termination) | |
| | OP[3] | NT-ODT Enable (Non Target ODT Enable) | |
| | OP[6:4] | CA ODT (CA Bus Receiver On-Die-Termination) | |
| MR12 | OP[6:0] | $V_{REF}$(CA) ($V_{REF}$(CA) Setting) | |
| MR14 | OP[6:0] | $V_{REF}$(DQ[7:0]) ($V_{REF}$(DQ[7:0]) Setting) | |
| MR15 | OP[6:0] | $V_{REF}$(DQ[15:8]) ($V_{REF}$(DQ[15:8]) Setting) | |
| MR17 | OP[2:0] | SoC ODT (Controller ODT Value for VOH calibration) | |
| | OP[3] | ODTD-CK (CK ODT termination) | |
| | OP[4] | ODTD-CS (CS ODT termination) | |
| | OP[5] | ODTD-CA (CA ODT termination) | |
| MR18 | OP[2:0] | WCK ODT | |
| | OP[3] | WCK FM (WCK Frequency Mode) | |
| | OP[4] | WCK ON (WCK always ON mode) | |
| | OP[7] | CKR (WCK to CK frequency ratio) | |
| MR19 | OP[1:0] | DVFSC (VDD2 Dynamic Voltage and Frequency Scaling Core) | |
| | OP[4] | WCK2DQ OSC FM | |
| | OP[3:2] | DVFSQ (VDDQ Dynamic Voltage and Frequency Scaling VDDQ) | |
| MR20 | OP[1:0] | RDQS (Read DQS) | |
| | OP[3:2] | WCK mode | |
| MR22 | OP[5:4] | WECC (Write link ECC Control) | |
| | OP[7:6] | RECC (Read link ECC Control) | |
| MR24 | OP[2:0] | DFE Quantity for Lower Byte (DFEQL) | |
| | OP[6:4] | DFE Quantity for Upper Byte (DFEQU) | |
| MR30 | OP[3:0] | DCA for Lower Byte (DCAL) | |
| | OP[7:4] | DCA for Upper Byte (DCAU) | |
| MR41 | OP[7:5] | NT DQ ODT (Non-Target DQ Bus Receiver On-Die-Termination) | |

See 6.2.1, Mode Register Definition, for more details.

### 7.6.3 Frequency Set Point (Cont'd)

Table 226 shows how the three mode registers for each of the parameters above can be modified by setting the appropriate FSP-WR value, and how device operation can be switched between operating points by setting the appropriate FSP-OP value. The FSP-WR and FSP-OP functions operate completely independently.

**Table 226 — Relation between MR Setting and DRAM Operation**

| Function | MR# & Operand | Data | Operation | Note |
|---|---|---|---|---|
| FSP-WR | MR16 OP[1:0] | $00_B$ (Default) | Data write to Mode Register N for FSP-OP[0] by MRW Command.<br>Data read from Mode Register N for FSP-OP[0] by MRR Command. | 1 |
| | | $01_B$ | Data write to Mode Register N for FSP-OP[1] by MRW Command.<br>Data read from Mode Register N for FSP-OP[1] by MRR Command. | |
| | | $10_B$ | Data write to Mode Register N for FSP-OP[2] by MRW Command.<br>Data read from Mode Register N for FSP-OP[2] by MRR Command. | |
| FSP-OP | MR16 OP[3:2] | $00_B$ (Default) | SDRAM operates with Mode Register N for FSP-OP[0] setting. | 2 |
| | | $01_B$ | SDRAM operates with Mode Register N for FSP-OP[1] setting. | |
| | | $10_B$ | SDRAM operates with Mode Register N for FSP-OP[2] setting. | |

NOTE 1 FSP-WR stands for Frequency Set Point Write/Read.
NOTE 2 FSP-OP stands for Frequency Set Point Operating Point.

#### 7.6.3.1 Frequency set point update Timing

The Frequency set point update timing is shown in Figure 154. When changing the frequency set point via MR16 OP[3:2], the VRCG setting: MR16 OP[6] is required to be changed into VREF Fast Response (high current) mode at the same time. After Frequency change time(tFC) is satisfied. VRCG can be changed into Normal Operation mode via MR16 OP[6].

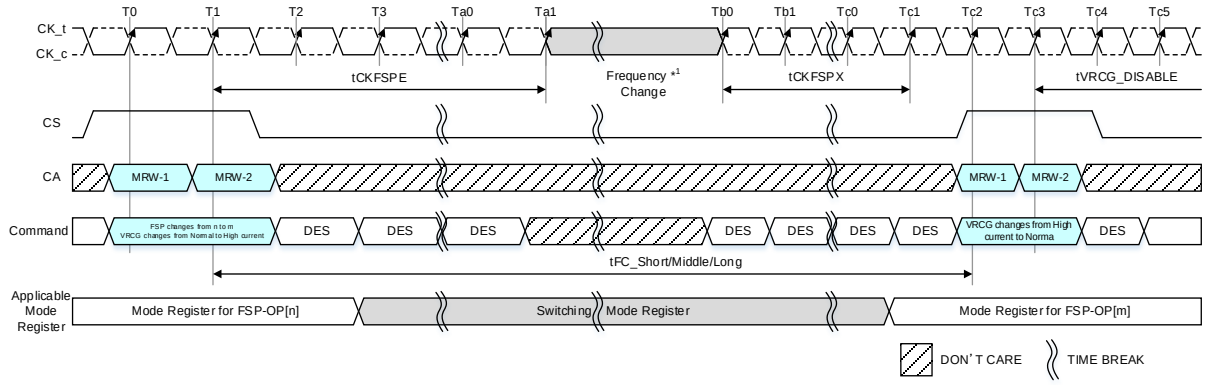


NOTE 1 The Clock frequency change should be made during the 'frequency change' timing (Ta1 to Tb0). For more information, refer to 7.6.7, Input Clock Stop and Frequency Change.
NOTE 2 From the rising edge of CK_t (at cycle T2) until the rising edge of CK_t at the end of tCKFSPX timing (Tc1), only DES command is allowed and CS should keep Low.

**Figure 154 — Frequency Set Point Switching Timing**

### 7.6.3.2 Frequency set point update Timing for DVFSC and DVFSQ

TBD

**Table 227 — Frequency Set Point AC Timing Table**

| Item | Symbol | Min/ Max | CK Frequency (MHz) | | | | | | | | | | | | Unit | Notes |
|---|---|---|---|---|---|---|---|---|---|---|---|---|---|---|---|---|
| | | | 533 | 1067 | 1600 | 2133 | 2750 | 3200 | 3733 | 4267 | 4800 | 5500 | 6000 | 6400 | | |
| Frequency Set Point parameters | | | | | | | | | | | | | | | | |
| Frequency Set Point Switching Time | tFC_Short | Min | 200+0.5tCK | | | | | | | | | | | | ns | 1,2 |
| | tFC_Long | Min | 250+0.5tCK | | | | | | | | | | | | ns | 1,2 |
| Valid Clock Requirement after Entering FSP Change | tCKFSPE | Min | max(7.5ns, 4nCK) | | | | | | | | | | | | - | |
| Valid Clock Requirement before 1st Valid Command after FSP change | tCKFSPX | Min | max(7.5ns, 4nCK) | | | | | | | | | | | | - | |

NOTE 1 Frequency Set Point Switching Time depends on value of $V_{REF}$(CA) setting: MR12 OP[6:0] of FSP-OP 0, 1 and 2. The details are shown in Table 228. Additionally change of Frequency Set Point may affect $V_{REF}$(DQ) setting. Settling time of $V_{REF}$(DQ) level is same as $V_{REF}$(CA) level.

NOTE 2 tCK for this timing is the tCK value of the operating frequency when the MRW is issued.

**Table 228 — tFC value mapping**

| Application | Step Size | |
|---|---|---|
| | From FSP -OP0 | To FSP-OP1 |
| tFC_Short | Base | A single step size increment/decrement |
| tFC_Long | Base | Equal to or more than 2 step size increment/decrement |

NOTE 1 Changing from FSP-OPx to FSP-OPy is also supported.

Table 229 provides an example of tFC value mapping when FSP-OP moves from OP0 to OP1.

**Table 229 — tFC value mapping example**

| Case | From/To | FSP-OP: MR16 OP[3:2] | $V_{REF}$(CA) Setting: MR12: OP[6:0] | Application | Note |
|---|---|---|---|---|---|
| 1 | From | 00 | 0001100 | tFC_Short | 1 |
| | To | 01 | 0001101 | | |
| 2 | From | 00 | 0001000 | tFC_Long | 2 |
| | To | 01 | 0101000 | | |

NOTE 1 A single step size increment/decrement for $V_{REF}$(CA) Setting Value.

NOTE 2 Equal to or more than 2 step size increment/decrement for $V_{REF}$(CA) Setting Value.

### 7.6.3.2 Frequency set point update Timing for DVFSC and DVFSQ (Cont'd)

The LPDDR5-SDRAM defaults to FSP-OP[0] at power-up. Both Set-Points default settings needed to operate in un-terminated, low-frequency environments. To enable the LPDDR5 SDRAM to operate at higher frequencies, Command Bus Training mode should be utilized to train the alternate Frequency Set-Point, **Figure 155**. See the section Command Bus Training (4.2.2) for more details on this training mode.

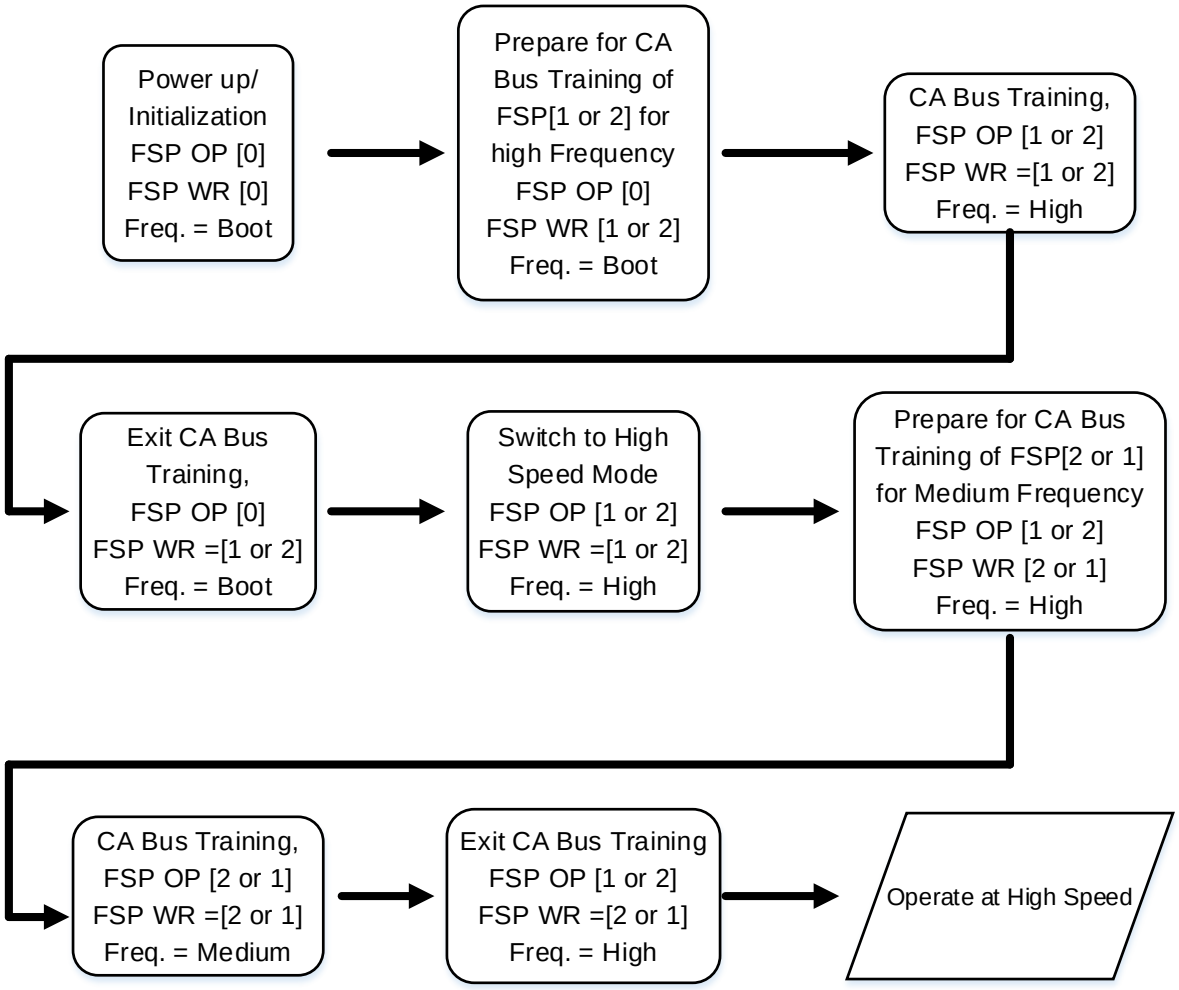


**Figure 155 — Training Three Frequency Set-Points**

### 7.6.3.2 Frequency set point update Timing for DVFSC and DVFSQ (Cont'd)

Once all Frequency Set-Points have been trained, switching between points can be performed by a single MRW followed by waiting for tFC (Figure 156).

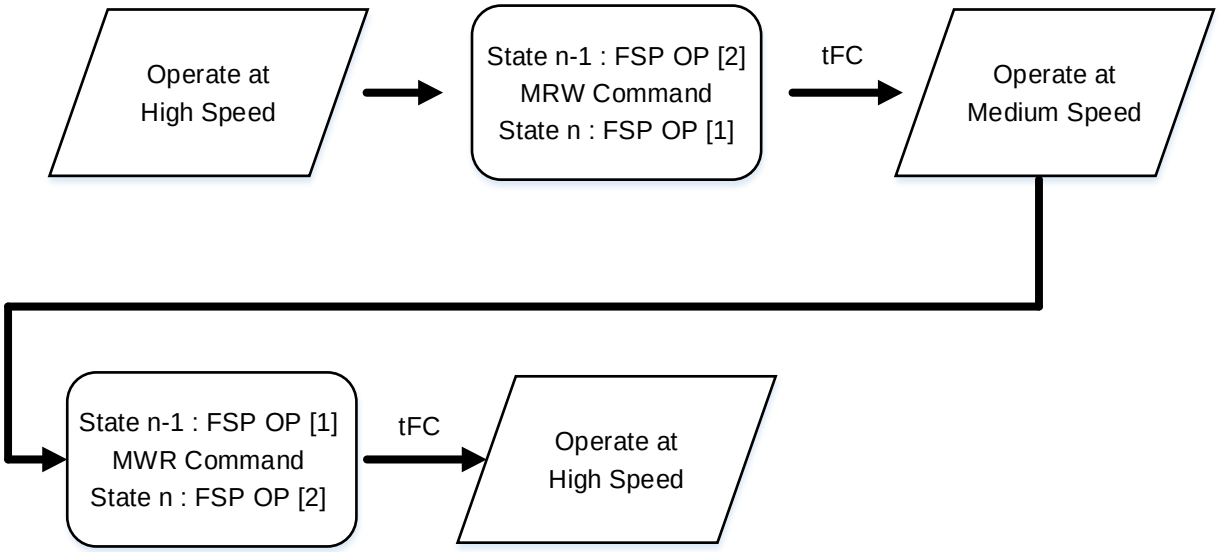


**Figure 156 — Switching Between Two Trained Frequency Set-Points (Example)**

Switching to a third (or more) Set-Point can be accomplished if the memory controller has stored the previously-trained values (in particular the $V_{REF}$(CA) calibration value) and re-writes these to the alternate Set-Point before switching FSP-OP (Figure 157).

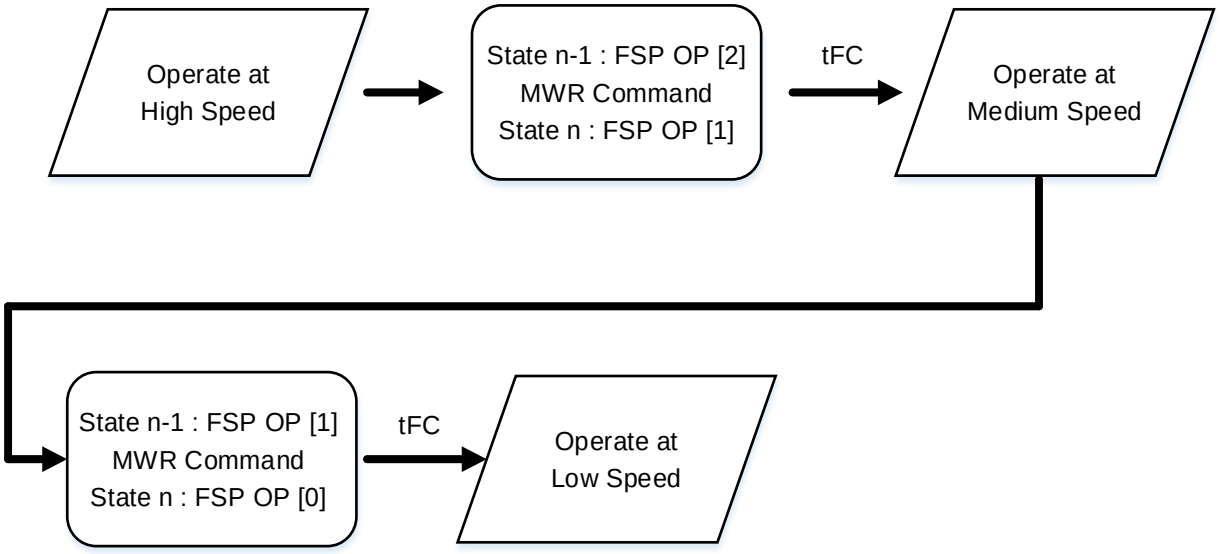


**Figure 157 — Switching to a Third Trained Frequency Set-Point (Example)**

### 7.6.4 On-Die Termination (ODT)

#### 7.6.4.1 On-Die Termination for Command/Address Bus

Command/Address ODT (On-Die Termination) is a feature of the LPDDR5 SDRAM that allows the SDRAM to turn on/off termination resistance for CK_t, CK_c, and CA[6:0] signals. The ODT feature is designed to improve signal integrity of the memory channel by allowing the DRAM controller to turn on and off termination resistance for any target DRAM devices via Mode Register setting. A simple functional representation of the Command/Address ODT feature is shown in Figure 158.

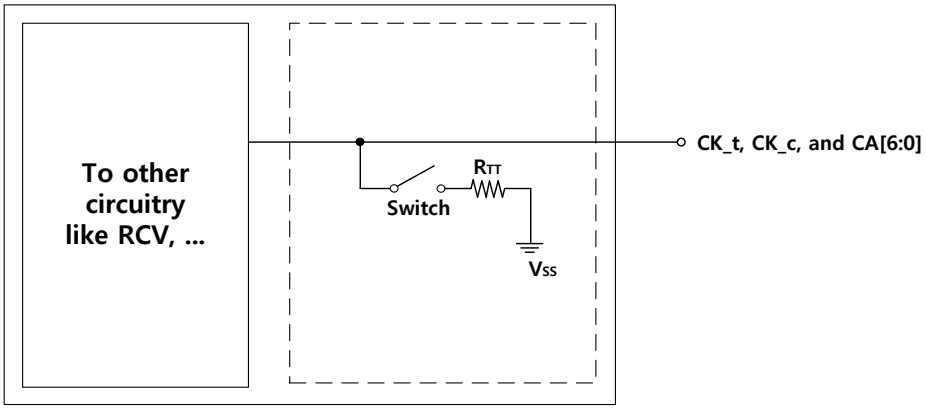


**Figure 158 — Functional Representation of Command/Address bus ODT**

##### 7.6.4.1.1 ODT Mode Register and ODT State Table for Command/Address Bus

Command/Address ODT termination values are set and enabled via MR11. The CA bus (CK_t, CK_c, CA[6:0]) ODT resistance values are set by MR11 OP[6:4]. The default state for the CA bus is ODT disabled.

CA/CK ODT of the device is designed to enable one rank (termination for one rank and un-termination for other ranks) or multi ranks (balanced termination for all ranks) to terminate the entire command bus in the multi rank system. For this reason, the rank providing CA, CK ODT via MR11 OP[6:4] and also MR17 setting will continue to terminate CA, CK bus in all DRAM states including Power-Down and Deep Sleep Mode.

For the individual ODT control, LPDDR5 SDRAM uses the MR17 setting. MR17 OP[3] is set to disable the CK ODT and MR17 OP[5] is set to disable the CA ODT. MR17 OP[7:6] is set to disable CK/CA ODT of the lower or upper byte of selected device and is only used for the Byte Mode device (X8).

In the multi-rank/channel system, the device usually shares the CA/CK bus and the un-terminated die needs to know ODT status of other shared dies when the termination status of CA/CK bus is different from each other. LPDDR5 SDRAM uses the MR25 setting to decide a buffer type for power optimization. MR25 OP[4] is set to notify CK ODT status of other shared dies, MR25 OP[5] is set to notify CA ODT status of other shared dies.

Example: when CK and CA ODT status is different from each other(ex. CK termination, CA un-termination) and MR25 OP[5] is disabled, the un-terminated CA input buffer use the fixed level reference voltage (TBD).

### 7.6.4.1.1 ODT Mode Register and ODT State Table for Command/Address Bus (Cont'd)

The ODT state of the Command/Address bus is shown in Table 230.

**Table 230 — Command/Address Bus ODT State**

LPDDR5 X16 Mode Device (MR8 OP[7:6] = 00B case)

| MR17 | X8ODTD Upper | X8ODTD Lower | CA | CK | CA | CK_t/CK_c |
|---|---|---|---|---|---|---|
| | OP[7] | OP[6] | OP[5] | OP[3] | | |
| LPDDR5 | X | X | 0 | 0 | T | T |
| | X | X | 0 | 1 | T | |
| | X | X | 1 | 0 | | T |
| | X | X | 1 | 1 | | |

NOTE 1 X16 mode device ignores MR17 OP[7:6] setting.
NOTE 2 MR11 OP[6:4] must be $001_B$, $010_B$, $011_B$, $100_B$, $101_B$, or $110_B$ to turn on CA/CK ODT.
NOTE 3 T means "terminated" condition. Blank is "un-terminated".

LPDDR5 Byte Mode Device (MR8 OP[7:6] = 01B case)

| MR17 | X8ODTD Upper | X8ODTD Lower | CA | CK | CA | | CK_t/CK_c | |
|---|---|---|---|---|---|---|---|---|
| | OP[7] | OP[6] | OP[5] | OP[3] | 0Byte | 1Byte | 0Byte | 1Byte |
| LPDDR5 | 0 | 0 | 0 | 0 | T | T | T | T |
| | 0 | 0 | 0 | 1 | T | T | | |
| | 0 | 0 | 1 | 0 | | | T | T |
| | 0 | 0 | 1 | 1 | | | | |
| | 0 | 1 | 0 | 0 | | T | | T |
| | 0 | 1 | 0 | 1 | | T | | |
| | 0 | 1 | 1 | 0 | | | | T |
| | 0 | 1 | 1 | 1 | | | | |
| | 1 | 0 | 0 | 0 | T | | T | |
| | 1 | 0 | 0 | 1 | T | | | |
| | 1 | 0 | 1 | 0 | | | T | |
| | 1 | 0 | 1 | 1 | | | | |

NOTE 1 MR11 OP[6:4] must be $001_B$, $010_B$, $011_B$, $100_B$, $101_B$, or $110_B$ to turn on CA/CK ODT.
NOTE 2 T means "terminated" condition. Blank is "un-terminated".
NOTE 3 Two T(T for $0_B$ and $1_B$) means balanced (identical) CA/CK ODT setting in x8 system.

#### 7.6.4.1.2 ODT Mode Register and ODT Characteristics for Command/Address Bus

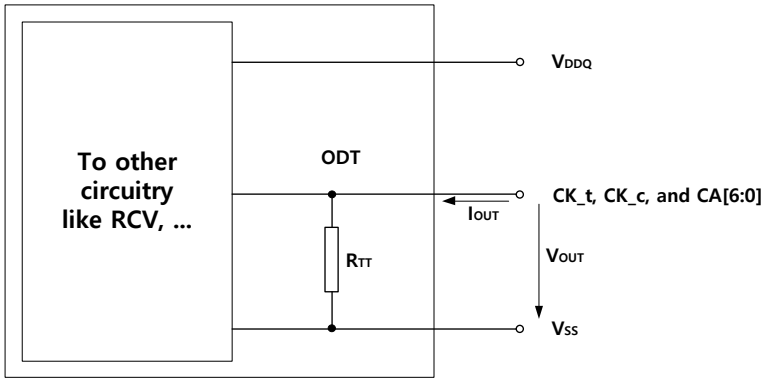


**Figure 159 — On Die Termination for Command/Address Bus**

**Table 231 — ODT DC Electrical Characteristics, assuming RZQ = 240Ω±1% over the entire operating temperature range after a proper ZQ calibration**

| MR11 OP[6:4] | RTT | Vout | Min | Nom | Max | Unit | Note |
|---|---|---|---|---|---|---|---|
| 001 | 240Ω | VOLdc = 0.2*VDDQ | 0.8 | 1.0 | 1.1 | RZQ | 1,2,3 |
| | | VOMdc = 0.5*VDDQ | 0.9 | 1.0 | 1.1 | RZQ | 1,2,3 |
| | | VOHdc = 0.75*VDDQ | 0.9 | 1.0 | 1.3 | RZQ | 1,2,3 |
| 010 | 120Ω | VOLdc = 0.2*VDDQ | 0.8 | 1.0 | 1.1 | RZQ/2 | 1,2,3 |
| | | VOMdc = 0.5*VDDQ | 0.9 | 1.0 | 1.1 | RZQ/2 | 1,2,3 |
| | | VOHdc = 0.75*VDDQ | 0.9 | 1.0 | 1.3 | RZQ/2 | 1,2,3 |
| 011 | 80Ω | VOLdc = 0.2*VDDQ | 0.8 | 1.0 | 1.1 | RZQ/3 | 1,2,3 |
| | | VOMdc = 0.5*VDDQ | 0.9 | 1.0 | 1.1 | RZQ/3 | 1,2,3 |
| | | VOHdc = 0.75*VDDQ | 0.9 | 1.0 | 1.3 | RZQ/3 | 1,2,3 |
| 100 | 60Ω | VOLdc = 0.2*VDDQ | 0.8 | 1.0 | 1.1 | RZQ/4 | 1,2,3 |
| | | VOMdc = 0.5*VDDQ | 0.9 | 1.0 | 1.1 | RZQ/4 | 1,2,3 |
| | | VOHdc = 0.75*VDDQ | 0.9 | 1.0 | 1.3 | RZQ/4 | 1,2,3 |
| 101 | 48Ω | VOLdc = 0.2*VDDQ | 0.8 | 1.0 | 1.1 | RZQ/5 | 1,2,3 |
| | | VOMdc = 0.5*VDDQ | 0.9 | 1.0 | 1.1 | RZQ/5 | 1,2,3 |
| | | VOHdc = 0.75*VDDQ | 0.9 | 1.0 | 1.3 | RZQ/5 | 1,2,3 |
| 110 | 40Ω | VOLdc = 0.2*VDDQ | 0.8 | 1.0 | 1.1 | RZQ/6 | 1,2,3 |
| | | VOMdc = 0.5*VDDQ | 0.9 | 1.0 | 1.1 | RZQ/6 | 1,2,3 |
| | | VOHdc = 0.75*VDDQ | 0.9 | 1.0 | 1.3 | RZQ/6 | 1,2,3 |
| Mismatch CA-CA within CLK group | | 0.5*VDDQ | - | | 2 | % | 1,2,4 |

NOTE 1 The tolerance limits are specified after calibration with stable voltage and temperature. For the behavior of the tolerance limits if temperature or voltage changes after calibration, see TBD.

NOTE 2 Pull-Dn ODT resistors are recommended to be calibrated at 0.5*VDDQ. Other calibration schemes may be used to achieve the linearity spec shown, e.g., calibration at 0.2* VDDQ and 0.75*VDDQ.

NOTE 3 Measurement definition for RTT : TBD.

NOTE 4 CA to CA mismatch within clock group (CA) variation for a given component including CK_t and CK_c (characterized).

$$\mathbf{CA-CA(Mismatch)} = \frac{\boldsymbol{RTT(max)} - \boldsymbol{RTT(min)}}{\boldsymbol{RTT(avg)}}$$

#### 7.6.4.1.3 ODT update time for Command/Address Bus

ODT update time for Command/Address Bus after Mode Register set are shown in Figure **160**.

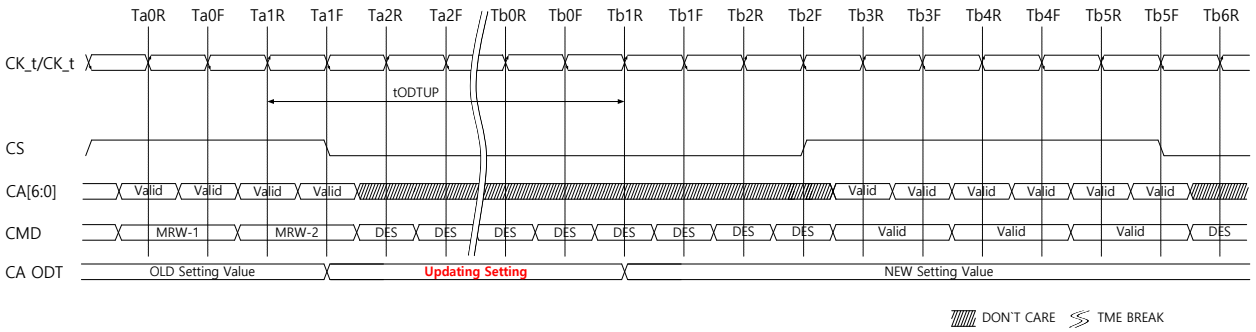


**Figure 160 — ODT for Command/Address setting update timing**

**Table 232 — ODT Command/Address bus AC timing parameter**

| Speed | | ALL Operation Frequency | | Unit |
|---|---|---|---|---|
| Parameter | Symbol | MIN | MAX | |
| ODT C/A Value Update Time | tODTUP | - | 250 | ns |

#### 7.6.4.2 On-Die Termination for Data Bus

Data Bus ODT(On-Die Termination) is a feature of the LPDDR5 SDRAM that allows the DRAM to turn on/off termination resistance for each DQ, DMI, RDQS_t/c signals. The ODT feature is designed to improve signal integrity of the memory channel by allowing the DRAM controller to turn on and off termination resistance for any target DRAM devices during Write or Mask Write operation.

The Data Bus ODT feature is off and cannot be supported in Power-Down and Self-Refresh and Deep Sleep Mode states. A simple functional representation of the DRAM ODT feature is shown in **Figure 161**.

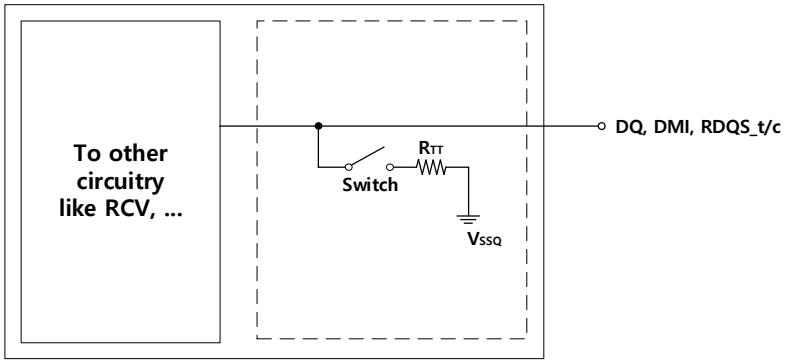


**Figure 161 — Functional Representation of Data bus ODT**

##### 7.6.4.2.1 ODT Mode Register for Data Bus

The Data Bus ODT mode is enabled if MR11 OP[2:0] are non-zero. In this case, the value of RTT is determined by the settings of those bits. The ODT Mode is disabled if MR11 OP[2:0] = 0.

##### 7.6.4.2.2 Asynchronous ODT for Data Bus

Although ODT Mode is enabled in MR11 OP[2:0], DRAM ODT is basically Hi-Z. DRAM ODT state is automatically turned ON asynchronously based on the Write or Mask Write command that DRAM samples. After the write burst is complete, DRAM ODT state is automatically turned OFF asynchronously.

Following timing parameters apply when DRAM ODT mode is enabled.

- ODTLon, tODTon,min, tODTon,max
- ODTLoff, tODToff,min, tODToff,max

ODTLon is a synchronous parameter and it is the latency from the Write or Mask Write command (the rising edge of the clock) to tODTon reference. ODTLon latency is a fixed latency value for each operation frequency range. Each operation frequency range has a different ODTLon latency. Minimum RTT turn-on time (tODTon,min) is the point in time when the device termination circuit leaves high impedance state and ODT resistance begins to turn on. Maximum RTT turn-on time (tODTon,max) is the point in time when the ODT resistance is fully on. tODTon,min and tODTon,max are measured once ODTLon latency is satisfied from the Write or Mask Write (the rising edge of the clock).

### 7.6.4.2.2 Asynchronous ODT for Data Bus (Cont'd)

ODTLoff is a synchronous parameter and it is the latency from the Write or Mask Write command (the rising edge of the clock) to tODToff reference. ODTLoff latency is a fixed latency value for each operation frequency range. Each operation frequency range has a different ODTLoff latency. Minimum RTT turn-off time (tODToff,min) is the point in time when the device termination circuit starts to turn off the ODT resistance. Maximum ODT turn-off time (tODToff,max) is the point in time when the on-die termination has reached high impedance. tODToff,min and tODToff,max are measured once ODTLoff latency is satisfied from the Write or Mask Write command (the rising edge of the clock).

**Table 233 — ODTLon and ODTLoff Latency Values**

| Data Rate (Mbps) | WCK:CK Ratio | Lower Clock Frequency Limit (>) (MHz) | Upper Clock Frequency Limit (<=) (MHz) | ODTLon Units=nCK | ODTLoff ( WL + BL/n_min + RU(tWCK2DQI(max)/tCK)) Units=nCK | | | | |
|---|---|---|---|---|---|---|---|---|---|
| | | | | | 16BANK mode | | 8BANK mode | 4BANK/4BG mode | |
| | | | | ALL mode | BL16 | BL32 | BL32 | BL16 | BL32 |
| 533 | 2:1 | 10 | 133 | WL - 1 | WL + 5 | WL + 9 | WL + 9 | - | - |
| 1067 | 2:1 | 133 | 267 | WL - 2 | WL + 5 | WL + 9 | WL + 9 | - | - |
| 1600 | 2:1 | 267 | 400 | WL - 2 | WL + 5 | WL + 9 | WL + 9 | - | - |
| 2133 | 2:1 | 400 | 533 | WL - 3 | WL + 5 | WL + 9 | WL + 9 | - | - |
| 2750 | 2:1 | 533 | 688 | WL - 3 | WL + 5 | WL + 9 | WL + 9 | - | - |
| 3200 | 2:1 | 688 | 800 | WL - 4 | WL + 5 | WL + 9 | WL + 9 | - | - |
| | | | | | | | | | |
| 533 | 4:1 | 5 | 67 | WL - 1 | WL + 3 | WL + 5 | WL + 5 | - | - |
| 1067 | 4:1 | 67 | 133 | WL - 1 | WL + 3 | WL + 5 | WL + 5 | - | - |
| 1600 | 4:1 | 133 | 200 | WL - 1 | WL + 3 | WL + 5 | WL + 5 | - | - |
| 2133 | 4:1 | 200 | 267 | WL - 2 | WL + 3 | WL + 5 | WL + 5 | - | - |
| 2750 | 4:1 | 267 | 344 | WL - 2 | WL + 3 | WL + 5 | WL + 5 | - | - |
| 3200 | 4:1 | 344 | 400 | WL - 2 | WL + 3 | WL + 5 | WL + 5 | - | - |
| 3733 | 4:1 | 400 | 467 | WL - 2 | - | - | WL + 5 | WL + 3 | WL + 7 |
| 4267 | 4:1 | 467 | 533 | WL - 3 | - | - | WL + 5 | WL + 3 | WL + 7 |
| 4800 | 4:1 | 533 | 600 | WL - 3 | - | - | WL + 5 | WL + 3 | WL + 7 |
| 5500 | 4:1 | 600 | 688 | WL - 3 | - | - | WL + 5 | WL + 3 | WL + 7 |
| 6000 | 4:1 | 688 | 750 | WL - 3 | - | - | WL + 5 | WL + 3 | WL + 7 |
| 6400 | 4:1 | 750 | 800 | WL - 3 | - | - | WL + 5 | WL + 3 | WL + 7 |

### 7.6.4.2.2 Asynchronous ODT for Data Bus (Cont'd)

**Table 234 — Asynchronous ODT Turn On and Turn Off Timing**

| Parameter | ALL Operation Frequency | Unit |
|---|---|---|
| tODTon,min | 1.5 | ns |
| tODTon,max | 3.5 | ns |
| tODToff,min | 1.5 | ns |
| tODToff,max | 3.5 | ns |

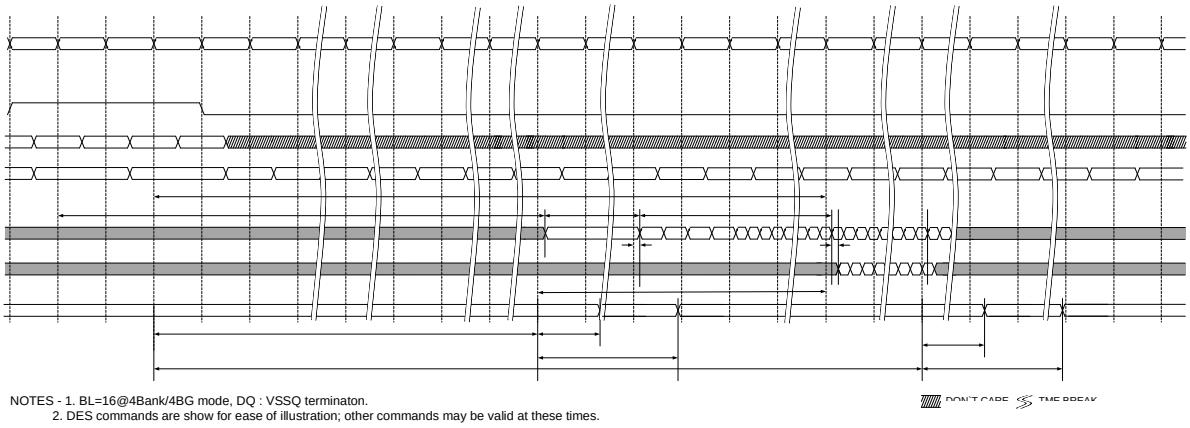


NOTE 1 BL=16@4Bank/4BG mode, DQ: VSSQ termination.
NOTE 2 DES commands are show for ease of illustration; other commands may be valid at these times.

**Figure 162 — Asynchronous ODTon/ODToff Timing**

### 7.6.4.2.3 ODT Mode Register and ODT Characteristics for Data Bus

On-Die Termination effective resistance RTT is defined by MR11 OP[2:0]. ODT is applied to the DQ, DMI, RDQS_t/c pins. A functional representation of the on-die termination is shown in Figure **163**.

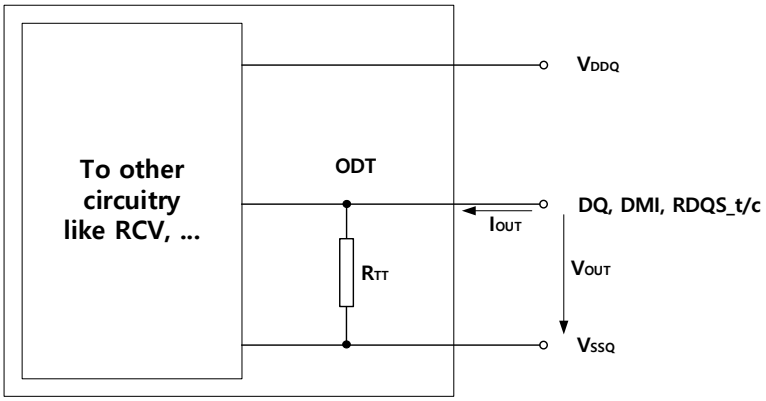


**Figure 163 — On Die Termination for Data Bus**

### 7.6.4.2.3 ODT Mode Register and ODT Characteristics for Data Bus (Cont'd)

**Table 235 — ODT DC Electrical Characteristics, assuming RZQ = 240Ω±1% over the entire operating temperature range after a proper ZQ calibration**

| MR11 OP[2:0] | RTT | Vout | Min | Nom | Max | Unit | Note |
|---|---|---|---|---|---|---|---|
| 001 | 240Ω | VOLdc = 0.2*VDDQ | 0.8 | 1.0 | 1.1 | RZQ | 1,2,3 |
| | | VOMdc = 0.5*VDDQ | 0.9 | 1.0 | 1.1 | RZQ | 1,2,3 |
| | | VOHdc = 0.75*VDDQ | 0.9 | 1.0 | 1.3 | RZQ | 1,2,3 |
| 010 | 120Ω | VOLdc = 0.2*VDDQ | 0.8 | 1.0 | 1.1 | RZQ/2 | 1,2,3 |
| | | VOMdc = 0.5*VDDQ | 0.9 | 1.0 | 1.1 | RZQ/2 | 1,2,3 |
| | | VOHdc = 0.75*VDDQ | 0.9 | 1.0 | 1.3 | RZQ/2 | 1,2,3 |
| 011 | 80Ω | VOLdc = 0.2*VDDQ | 0.8 | 1.0 | 1.1 | RZQ/3 | 1,2,3 |
| | | VOMdc = 0.5* VDDQ | 0.9 | 1.0 | 1.1 | RZQ/3 | 1,2,3 |
| | | VOHdc = 0.75*VDDQ | 0.9 | 1.0 | 1.3 | RZQ/3 | 1,2,3 |
| 100 | 60Ω | VOLdc = 0.2*VDDQ | 0.8 | 1.0 | 1.1 | RZQ/4 | 1,2,3 |
| | | VOMdc = 0.5*VDDQ | 0.9 | 1.0 | 1.1 | RZQ/4 | 1,2,3 |
| | | VOHdc = 0.75*VDDQ | 0.9 | 1.0 | 1.3 | RZQ/4 | 1,2,3 |
| 101 | 48Ω | VOLdc = 0.2*VDDQ | 0.8 | 1.0 | 1.1 | RZQ/5 | 1,2,3 |
| | | VOMdc = 0.5*VDDQ | 0.9 | 1.0 | 1.1 | RZQ/5 | 1,2,3 |
| | | VOHdc = 0.75*VDDQ | 0.9 | 1.0 | 1.3 | RZQ/5 | 1,2,3 |
| 110 | 40Ω | VOLdc = 0.2*VDDQ | 0.8 | 1.0 | 1.1 | RZQ/6 | 1,2,3 |
| | | VOMdc = 0.5*VDDQ | 0.9 | 1.0 | 1.1 | RZQ/6 | 1,2,3 |
| | | VOHdc = 0.75*VDDQ | 0.9 | 1.0 | 1.3 | RZQ/6 | 1,2,3 |
| Mismatch DQ-DQ within byte | | 0.5*VDDQ | - | | 2 | % | 1,2,4 |

NOTE 1 The tolerance limits are specified after calibration with stable voltage and temperature. For the behavior of the tolerance limits if temperature or voltage changes after calibration, see 15.9.

NOTE 2 Pull-Dn ODT resistors are recommended to be calibrated at 0.5*VDDQ. Other calibration schemes may be used to achieve the linearity spec shown, e.g., calibration at 0.2* VDDQ and 0.75*VDDQ.

NOTE 3 Measurement definition for RTT: TBD

NOTE 4 DQ to DQ mismatch within byte variation for a given component (characterized).

$$\mathbf{DQ-DQ(Mismatch)} = \frac{\boldsymbol{RTT(max)} - \boldsymbol{RTT(min)}}{\boldsymbol{RTT(avg)}}$$

### 7.6.4.3 On-Die Termination for WCK_t and WCK_c

WCK ODT (On-Die Termination) is a feature of the LPDDR5 SDRAM that allows the SDRAM to turn on/off termination resistance for WCK_t and WCK_c signals without the ODT control pin. The ODT feature is designed to improve signal integrity of the memory channel by allowing the DRAM controller to turn on and off termination resistance for DRAM devices via Mode Register setting. A simple functional representation of the DRAM ODT feature is shown in Figure 152.

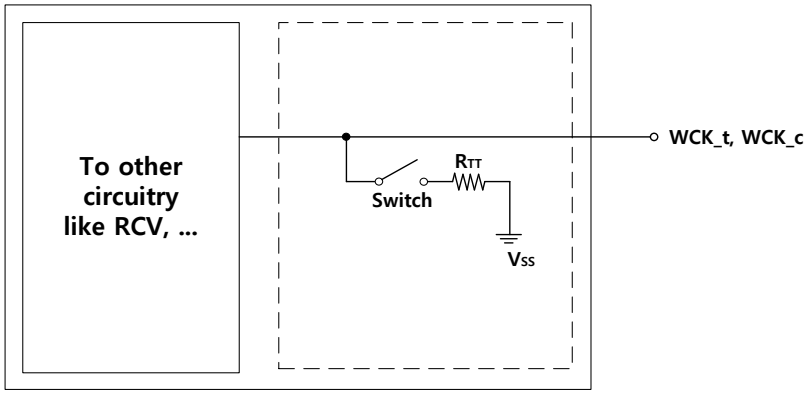


**Figure 164 — Functional Representation of WCK ODT**

#### 7.6.4.3.1 ODT Mode Register for WCK_t/c

The WCK ODT termination values are set and enabled via MR18. The WCK ODT resistance values are set by MR18 OP[2:0]. The default state for the WCK is ODT disabled.

The WCK ODT of the device always maintains the present ODT status except that the device is in the Power-Down or Self-Refresh Power-Down or Deep Sleep Mode.

#### 7.6.4.3.2 ODT during WCK2CK training

If the WCK ODT is enabled in MR18 OP[2:0], in WCK2CK training mode, DRAM always provides the termination on WCK_t/WCK_c signals with pre-defined ODT value by MR18 OP[2:0]. DQ termination is always off in WCK2CK training mode.

#### 7.6.4.4 ODT Mode Register and ODT Characteristics for CS

CS ODT(On-Die Termination) is a feature of the LPDDR5 SDRAM that allows the DRAM to turn on/off termination resistance for CS signal. The ODT feature is designed to improve signal integrity of the memory channel by allowing the DRAM controller to turn on with specific RZQ value and off termination resistance for any target DRAM devices via Mode Register setting. A simple functional representation of the CS ODT feature is shown in **Figure 165**.

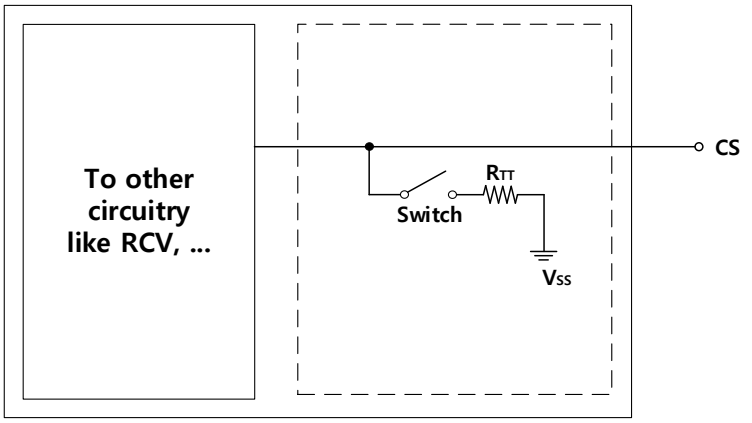


**Figure 165 - Functional Representation of CS**

##### 7.6.4.4.1 ODT Mode Register and ODT Characteristics for CS

On-Die Termination effective resistance RTT of the CS pin is enabled by MR17 OP[4] with RZQ/3. The Vout level is driven from the VDD2H with VDDQ based ZQ codes. The CS ODT is not allowable in VDDQ power rail. A functional representation of the on-die termination is shown in **Figure 166**.

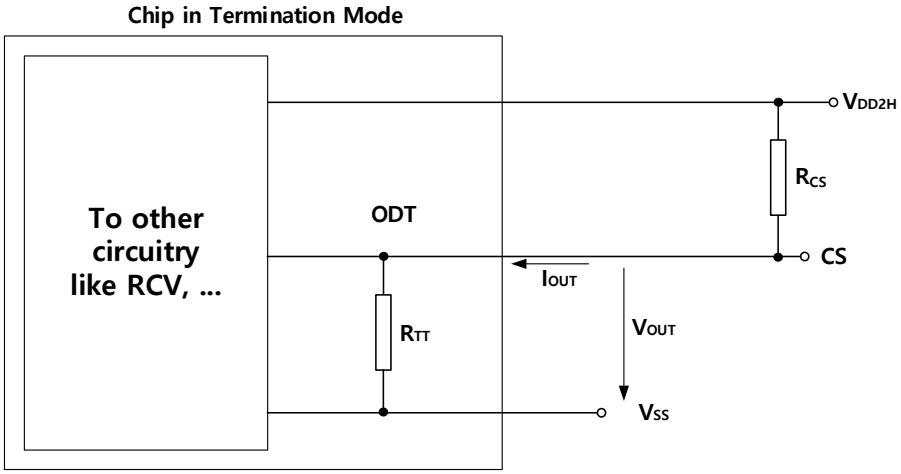


**Figure 166 - On Die Termination for CS**

**Table 236 - CS ODT DC Electrical Characteristics, assuming RZQ = 240Ω±1% over the entire operating temperature range after a proper ZQ calibration**

| MR17 OP[4] | RTT | $R_{CS}$ | Min | Nom | Max | Unit | Note |
|---|---|---|---|---|---|---|---|
| 0 | RZQ/3 | 40ohm | 1.2 | - | 2.1 | RZQ | 1,2,3 |
| | | 60ohm | 1.2 | - | 1.9 | RZQ | 1,2,3 |

NOTE 1 The tolerance limits are specified after calibration with stable voltage and temperature. For the behavior of the tolerance limits if temperature or voltage changes after calibration, see TBD.

NOTE 2 Pull-Dn ODT resistors are recommended to be calibrated at 0.5*VDDQ.

NOTE 3 Measurement definition for RTT : TBD

### 7.6.5 Non-target DRAM ODT

LPDDR5 SDRAM supports the Non-target DRAM ODT function for DQ, DMI and RDQS pins to improve signal integrity in 2-rank configuration. The Non-target DRAM ODT function is enabled by MR11 OP[3]=$1_B$ and its ODT value is set by MR41 OP[7:5]. The Non-target DRAM ODT is activated at all states. A simple DRAM ODT configuration at Read and Write case is shown in **Figure 167**. Non-target ODT enabling pins should be driven Low in standby mode to avoid leakage current. Also, loopback test function for debug and testing purpose between SDRAM and SOC can be supported by enabling MR41 OP [7:5] Non-target ODT setting.

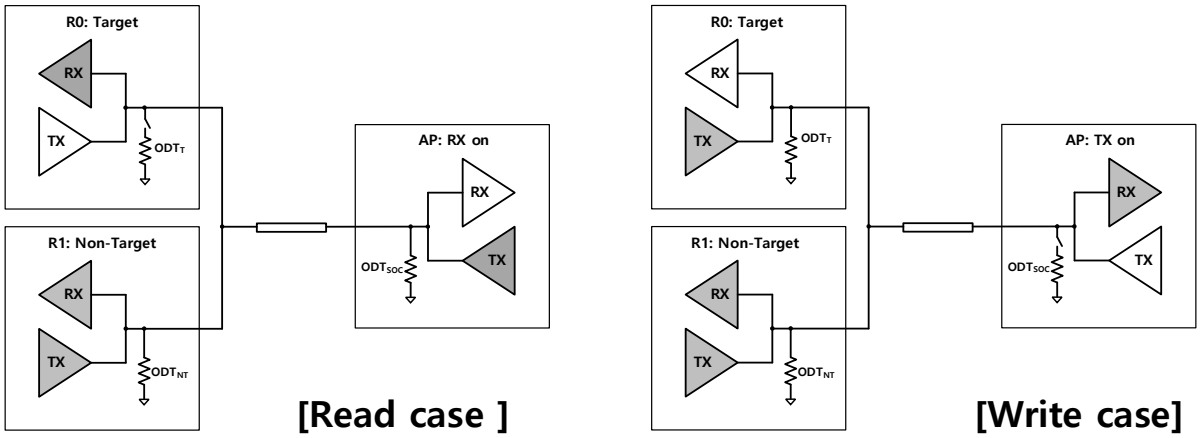


**Figure 167 - DRAM ODT configuration of Non-target DRAM ODT mode**

**Table 237 - Non-target and Target ODT status depending on DRAM state**

| Current DRAM State | Non-Target DRAM | Target DRAM |
|---|---|---|
| Power Down | Enable **(MR41 OP[7:5])** | Enable **(MR41 OP[7:5])** |
| Self-Refresh Power Down | Enable **(MR41 OP[7:5])** | Enable **(MR41 OP[7:5])** |
| Deep Sleep Mode | Enable **(MR41 OP[7:5])** | Enable **(MR41 OP[7:5])** |
| Pre-charge/Active Standby | Enable **(MR41 OP[7:5])** | Enable **(MR41 OP[7:5])** |
| Write/Write FIFO | Enable **(MR41 OP[7:5])** | Enable **(MR11 OP[2:0])** |
| Read/Read FIFO/Read DQ Calibration/MRR | Enable **(MR41 OP[7:5])** | PDDS/PUDS |

When enabling NT-ODT, following MR setting of SDRAMs connected to the same data bus line is required to have same setting.

- Write Link ECC MR22 OP[5:4]
- Read Link ECC MR22 OP[7:6]
- DBI-WR MR3 OP[7]
- DBI RD MR3 OP[6]
- DMD MR13 OP[5]
- WDCFE MR21 OP[4]
- RDCFE MR21 OP[5]
- RDQS MR20 OP[1:0]
- WCK-DQS_t/Parity Training MR46 OP[2]

#### 7.6.5.1 Non-target DRAM ODT control

In Non-Target ODT (NT-ODT) mode, Target DRAM ODT and Non-Target DRAM ODT can be set by MR11 OP[3] and MR41 OP[7:5] and NT-ODT needs to be used with Target ODT. It means that a following MR combination is inhibited: DQ ODT: MR11 OP[2:0] =$000_B$ and NT-ODT Enable: MR11 OP[3]=$1_B$. The above-mentioned restriction does not prohibit to use Target ODT independently. If using NT-ODT function, following things should be considered: VIH specification of DQ is satisfied for Write operation. In Read operation, since SDRAM calibrates Pull-Up strength to satisfy VOH specification according as SoC ODT of MR17 OP[2:0], SoC ODT of MR17 OP[2:0] should be the same as equivalent resistance of NT-ODT (MR41 OP[7:5]) and ODT of SoC Rx. Notice that the ODT value of non-target rank should be always one fixed level irrespective of read/write operation and NT-ODT should be disabled in case of VRO enabled by MR13 OP[2]. Refer to the table below for more information.

**Table 238 - Normal Mode vs. NT-ODT Mode for Write Operation**

| Mode<br>MR11 OP[3] | Target Rank ODT | Non-Target Rank ODT | Equivalent ODT of 2-Rank DRAM |
|---|---|---|---|
| OP[3]=0<br>(Normal Mode) | MR11 OP[2:0]<br>($ODT_T$) | Disable | $ODT_T$ |
| OP[3]=1<br>(NT-ODT Mode) | MR11 OP[2:0]<br>($ODT_T$) | MR41 OP[7:5]<br>($ODT_{NT}$) | $ODT_T$ \|\| $ODT_{NT}$ |

**Table 239 - Table 1. Normal Mode vs. NT-ODT Mode for Read Operation**

| Mode<br>MR11 OP[3] | Non-Target Rank ODT | SoC Rx ODT | Equivalent ODT for RD operation | MR17 OP[2:0]<br>(SoC ODT for DRAM Pull-Up Cal.) |
|---|---|---|---|---|
| OP[3]=0<br>(Normal Mode) | Disable | $ODT_{SOC}$ | $ODT_{SOC}$ | $ODT_{SOC}$ |
| OP[3]=1<br>(NT-ODT Mode) | MR41 OP[7:5]<br>($ODT_{NT}$) | $ODT_{SOC}$ | $ODT_{NT}$ \|\| $ODT_{SOC}$ | $ODT_{NT}$ \|\| $ODT_{SOC}$[1] |

NOTE 1 Since SoC ODT of MR17 can only support RZQ/n (n=1,2,3,4,5,6), (ODTNT||ODTSOC) should be one of RZQ/1, RZQ/2, RZQ/3, RZQ/4, RZQ/5, and RZQ/6.

**Table 240** shows all combinations that equivalent ODT is RZQ/1, RZQ/2, RZQ/3, RZQ/4, RZQ/5, or RZQ/6.

**Table 240 - Combination of Target ODT, Non-target ODT and SoC ODT**

| $ODT_{NT}$ | $ODT_T$ | $ODT_{SoC}$ | Write ($ODT_{eq}=ODT_{NT} \parallel ODT_T$) | Read (SoC ODT MR17 OP[2:0]) |
|---|---|---|---|---|
| RZQ/1 | RZQ/1 | Diabled | RZQ/2 | RZQ/1 |
| | RZQ/2 | RZQ/1 | RZQ/3 | RZQ/2 |
| | RZQ/3 | RZQ/2 | RZQ/4 | RZQ/3 |
| | RZQ/4 | RZQ/3 | RZQ/5 | RZQ/4 |
| | RZQ/5 | RZQ/4 | RZQ/6 | RZQ/5 |
| | - | RZQ/5 | - | RZQ/6 |
| RZQ/2 | RZQ/1 | Diabled | RZQ/3 | RZQ/2 |
| | RZQ/2 | RZQ/1 | RZQ/4 | RZQ/3 |
| | RZQ/3 | RZQ/2 | RZQ/5 | RZQ/4 |
| | RZQ/4 | RZQ/3 | RZQ/6 | RZQ/5 |
| | - | RZQ/4 | - | RZQ/6 |
| RZQ/3 | RZQ/1 | Diabled | RZQ/4 | RZQ/3 |
| | RZQ/2 | RZQ/1 | RZQ/5 | RZQ/4 |
| | RZQ/3 | RZQ/2 | RZQ/6 | RZQ/5 |
| | - | RZQ/3 | - | RZQ/6 |
| RZQ/4 | RZQ/1 | Diabled | RZQ/5 | RZQ/4 |
| | RZQ/2 | RZQ/1 | RZQ/6 | RZQ/5 |
| | - | RZQ/2 | - | RZQ/6 |
| RZQ/5 | RZQ/1 | Diabled | RZQ/6 | RZQ/5 |
| | - | RZQ/1 | - | RZQ/6 |

**Table 241 – Combination among Read Link ECC, Data Mask, Write DBI, Read DBI and Read Data Copy**

| Read Link ECC MR22 OP[7:6] | DMD MR13 OP[5] | DBI WR MR3 OP[7] | DBI RD MR3 OP[6] | RDCFE MR21 OP[5] | DMI Status | NT ODT to DMI | Notes |
|---|---|---|---|---|---|---|---|
| $00_B$ (Disable) | $0_B$ (Disable) | $0_B$ (Disable) | $0_B$ (Disable) | $0_B$ (Disable) | Enable | NT-ODT follows MR setting | 1 |
| $00_B$ (Disable) | $0_B$ (Disable) | $0_B$ (Disable) | $0_B$ (Disable) | $1_B$ (Enable) | Enable | NT-ODT follows MR setting | 1 |
| $00_B$ (Disable) | $0_B$ (Disable) | $0_B$ (Disable) | $1_B$ (Enable) | $0_B$ (Disable) | Enable | NT-ODT follows MR setting | 1 |
| $00_B$ (Disable) | $0_B$ (Disable) | $0_B$ (Disable) | $1_B$ (Enable) | $1_B$ (Enable) | Enable | NT-ODT follows MR setting | 1 |
| $00_B$ (Disable) | $0_B$ (Disable) | $1_B$ (Enable) | $0_B$ (Disable) | $0_B$ (Disable) | Enable | NT-ODT follows MR setting | 1 |
| $00_B$ (Disable) | $0_B$ (Disable) | $1_B$ (Enable) | $0_B$ (Disable) | $1_B$ (Enable) | Enable | NT-ODT follows MR setting | 1 |
| $00_B$ (Disable) | $0_B$ (Disable) | $1_B$ (Enable) | $1_B$ (Enable) | $0_B$ (Disable) | Enable | NT-ODT follows MR setting | 1 |
| $00_B$ (Disable) | $0_B$ (Disable) | $1_B$ (Enable) | $1_B$ (Enable) | $1_B$ (Enable) | Enable | NT-ODT follows MR setting | 1 |
| $00_B$ (Disable) | $1_B$ (Enable) | $0_B$ (Disable) | $0_B$ (Disable) | $0_B$ (Disable) | Disable | N/A | |
| $00_B$ (Disable) | $1_B$ (Enable) | $0_B$ (Disable) | $0_B$ (Disable) | $1_B$ (Enable) | Enable | NT-ODT follows MR setting | 1 |
| $00_B$ (Disable) | $1_B$ (Enable) | $0_B$ (Disable) | $1_B$ (Enable) | $0_B$ (Disable) | Enable | NT-ODT follows MR setting | 1 |
| $00_B$ (Disable) | $1_B$ (Enable) | $0_B$ (Disable) | $1_B$ (Enable) | $1_B$ (Enable) | Enable | NT-ODT follows MR setting | 1 |
| $00_B$ (Disable) | $1_B$ (Enable) | $1_B$ (Enable) | $0_B$ (Disable) | $0_B$ (Disable) | Enable | NT-ODT follows MR setting | 1 |
| $00_B$ (Disable) | $1_B$ (Enable) | $1_B$ (Enable) | $0_B$ (Disable) | $1_B$ (Enable) | Enable | NT-ODT follows MR setting | 1 |
| $00_B$ (Disable) | $1_B$ (Enable) | $1_B$ (Enable) | $1_B$ (Enable) | $0_B$ (Disable) | Enable | NT-ODT follows MR setting | 1 |
| $00_B$ (Disable) | $1_B$ (Enable) | $1_B$ (Enable) | $1_B$ (Enable) | $1_B$ (Enable) | Enable | NT-ODT follows MR setting | 1 |
| $01_B$ (Enable) | N/A | N/A | $1_B$ (Enable) | N/A | N/A | Prohibited setting | 2 |
| $01_B$ (Enable) | N/A | N/A | N/A | $1_B$ (Enable) | N/A | Prohibited setting | 3 |
| $01_B$ (Enable) | $0_B$ (Disable) | $0_B$ (Disable) | $0_B$ (Disable) | $0_B$ (Disable) | Enable | NT-ODT follows MR setting | 1 |
| $01_B$ (Enable) | $0_B$ (Disable) | $1_B$ (Enable) | $0_B$ (Disable) | $0_B$ (Disable) | Enable | NT-ODT follows MR setting | 1 |
| $01_B$ (Enable) | $1_B$ (Enable) | $0_B$ (Disable) | $0_B$ (Disable) | $0_B$ (Disable) | Enable | NT-ODT follows MR setting | 1 |
| $01_B$ (Enable) | $1_B$ (Enable) | $1_B$ (Enable) | $0_B$ (Disable) | $0_B$ (Disable) | Enable | NT-ODT follows MR setting | 1 |

NOTE 1 NT-ODT follows MR11 OP[3] and/or MR41 OP[7:5].
MR11 OP[3]: Non Target ODT Enable, MR41 OP[7:5]: NT DQ ODT (value setting)
NOTE 2 Read Link ECC: MR22 OP[7:6] and DBI RD MR3 OP[7] are mutually exclusive.
NOTE 3 Read Link ECC: MR22 OP[7:6] and RDCFE MR21 OP[5] are mutually exclusive.

**Table 242 - Combination among RDQS mode, WCK-RDQS/Parity Training, Read/Write-based WCK-RDQS_t Training and Write Link ECC**

| WCK-RDQS_t/Parity Training MR46 OP[2] | Read/Write-based WCK-RDQS_t Training MR26 OP[7] | Write Link ECC MR22 OP[5:4] | Read DQS MR20 OP[1:0] | RDQS_t Status | RDQS_c Status | NT ODT to RDQS_t/c | Notes |
|---|---|---|---|---|---|---|---|
| $0_B$ (Disable) | $0_B$ (Disable) | $00_B$ (Disable) | $00_B$ | Disable | Disable | NT-ODT should be disabled | 1 |
| $0_B$ (Disable) | $0_B$ (Disable) | $00_B$ (Disable) | $01_B$ | Enable | Disable | NT-ODT should be disabled | 1 |
| $0_B$ (Disable) | $0_B$ (Disable) | $00_B$ (Disable) | $10_B$ | Enable | Enable | NT-ODT can be applied | |
| $0_B$ (Disable) | $0_B$ (Disable) | $00_B$ (Disable) | $11_B$ | Disable | Enable | NT-ODT should be disabled | 1 |
| $0_B$ (Disable) | $0_B$ (Disable) | $01_B$ (Enable) | $00_B$, $01_B$, $11_B$ | N/A | N/A | Prohibited setting | 2 |
| $0_B$ (Disable) | $0_B$ (Disable) | $01_B$ (Enable) | $10_B$ | Enable | Enable | NT-ODT can be applied | |
| $0_B$ (Disable) | $1_B$ (Enable) | $00_B$ (Disable) | $00_B$, $01_B$, $11_B$ | N/A | N/A | Prohibited setting | 2 |
| $0_B$ (Disable) | $1_B$ (Enable) | $00_B$ (Disable) | $10_B$ | Enable | Enable | NT-ODT can be applied | |
| $0_B$ (Disable) | $1_B$ (Enable) | $01_B$ (Enable) | $00_B$, $01_B$, $11_B$ | N/A | N/A | Prohibited setting | 2 |
| $0_B$ (Disable) | $1_B$ (Enable) | $01_B$ (Enable) | $10_B$ | Enable | Enable | NT-ODT can be applied | |
| $1_B$ (Enable) | $0_B$ (Disable) | $00_B$ (Disable) | $00_B$, $01_B$, $10_B$, $11_B$ | N/A | N/A | Prohibited setting | 4 |
| $1_B$ (Enable) | $0_B$ (Disable) | $01_B$ (Enable) | $00_B$, $01_B$, $11_B$ | N/A | N/A | Prohibited setting | 3 |
| $1_B$ (Enable) | $0_B$ (Disable) | $01_B$ (Enable) | $10_B$ | Enable | Enable | NT-ODT can be applied | |
| $1_B$ (Enable) | $1_B$ (Enable) | $00_B$ (Disable) | $00_B$, $01_B$, $10_B$, $11_B$ | N/A | N/A | Prohibited setting | 5 |
| $1_B$ (Enable) | $1_B$ (Enable) | $01_B$ (Enable) | $00_B$, $01_B$, $10_B$, $11_B$ | N/A | N/A | Prohibited setting | 5 |

NOTE 1 MR is required to be set as follows: MR11 OP[3] = 0B or “MR11 OP[3] = 1B and MR41 OP[7:5] = 000B.”
MR11 OP[3]: Non Target ODT Enable, MR41 OP[7:5]: NT DQ ODT (value setting)

NOTE 2 NT-ODT should be disabled when using RDQS SE/Disable Mode.

NOTE 3 Target operating speed is not overlapped between RDQS SE/Disable Mode and WCK-DQS/Parity Training and Write Link ECC.
- 1600Mbps ≥ RDQS SE/Disable Mode
- 3200Mbps < Link ECC/ WCK-RDQS-Parity Training/ Read/Write-based WCK-RDQS_t Training.

NOTE 4 Write Link ECC MR22 OP[5:4]=01B is needed prior to set 1B to MR46 OP[2]: WCK-RDQS_t/Parity Training Enabled.

NOTE 5 WCK-RDQS_t/Parity Training: MR46 OP[2]=1B and Read/Write-based WCK-RDQS_tTraining: MR26 OP[7]=1B are mutually exclusive.

### 7.6.5.2 Asynchronous NT-ODT

The NT-ODT is enabled by MR11 OP[3] and a target ODT of DRAM is controlled by Write related commands such as Write, Masked Write, Write FIFO command or Read related commands such as Read, MRR, Read DQ Calibration, Read FIFO command. the ODT of each DRAM is turned on with NT-ODT value (MR41 OP[2:0]). The controller can check that LPDDR5 SDRAM supports the separate DQ NT-ODT timing from RDQS NT-ODT timing by MR0 OP[0] (MR0 OP[0]=$0_B$: Same NT-ODT timing for DQ/RDQS, OP[0]=$1_B$: Separate DQ NT-ODT timing from RDQS NT-ODT timing). When Write, Mask Write or Read command is issued to the target DRAM, according to timing parameters like ODTLon_(RD/RD_DQ/RDQS), tODT_(RD)on, ODTLoff_(RD/RD_DQ/RDQS) or tODT_(RD)off, the ODT of the target DRAM is controlled. Following timing parameters apply when DRAM NT-ODT mode is enabled.

- ODTLon, tODTon,min, tODTon,max
- ODTLoff, tODToff,min, tODToff,max
- ODTLon_RD/RD_DQ/RDQS, tODT_RDon,min, tODT_RDon,max
- ODTLoff_RD/RD_DQ/RDQS, tODT_RDoff,min, tODT_RDoff,max

**Table 243 - MR0 OP[0] for NT-ODT timing mode**

| Function | Register Type | Operand | Data |
|---|---|---|---|
| NT-ODT timing mode | Read-Only | OP[0] | $0_B$: Same NT-ODT timing for DQ/RDQS<br>$1_B$: Separate DQ NT-ODT timing from RDQS NT-ODT timing |

ODTLon is a synchronous parameter and it is the latency from the Write related command such as Write or Masked Write, Write FIFO command (the rising edge of the clock) to tODTon reference. ODTLon latency is a fixed latency value for each operation frequency range. Each operation frequency range has a different ODTLon latency. Minimum RTT turn-on time (tODTon,min) is the point in time when the device termination circuit leaves high impedance state and NT-ODT resistance begins to turn on. Maximum RTT turn-on time (tODTon,max) is the point in time when the ODT resistance is fully on. tODTon,min and tODTon,max are measured once ODTLon latency is satisfied from the Write or Mask Write command.
ODTLoff is a synchronous parameter and it is the latency from the Write or Mask Write command (the rising edge of the clock) to tODToff reference. ODTLoff latency is a fixed latency value for each operation frequency range. Each operation frequency range has a different ODTLoff latency. Minimum RTT turn-off time (tODToff,min) is the point in time when the device termination circuit starts to turn off the NT-ODT resistance. Maximum NT-ODT turn-off time (tODToff,max) is the point in time when the on-die termination has reached high impedance. tODToff,min and tODToff,max are measured once ODTLoff latency is satisfied from the Write or Mask Write command.

ODTLoff_RD/RD_DQ/RDQS is a synchronous parameter and it is the latency from the Read command(the rising edge of the clock) to tODT_RDoff reference. ODTLoff_RD/RD_DQ/RDQS latency is a fixed latency value for each operation frequency range. Each operation frequency range has a different ODTLoff_RD/RD_DQ/RDQS latency. Minimum RTT turn-off time (tODT_RDoff,min) is the point in time when the device termination circuit starts to turn off the NT-ODT resistance. Maximum NT-ODT turn-off time (tODT_RDoff,max) is the point in time when the on-die termination has reached high impedance. tODT_RDoff,min and tODT_RDoff,max are measured once ODTLoff latency is satisfied from the Read command. ODTLon_RD/RD_DQ/RDQS is a synchronous parameter and it is the latency from the Read command (the rising edge of the clock) to tODT_RDon reference. ODTLon_RD/RD_DQ/RDQS latency is a fixed latency value for each operation frequency range. Each operation frequency range has a different ODTLon_RD/RD_DQ/RDQS latency. Minimum RTT turn-on time (tODT_RDon,min) is the point in time when the device termination circuit leaves high impedance state and NT-ODT resistance begins to turn on. Maximum RTT turn-on time (tODT_RDon,max) is the point in time when the ODT resistance is fully on. tODT_RDon,min and tODT_RDon,max are measured once ODTLon_RD/RD_DQ/RDQS latency is satisfied from the Read command.

## Table 244 - ODTLon and ODTLoff Latency Values for Write

| Data Rate | WCK:CK Ratio | Lower Clock Frequency Limit (>) (MHz) | Upper Clock Frequency Limit (<=) (MHz) | ODTLon Units=nCK | ODTLoff ( WL + BL/n_min + RU(tWCK2DQI(max)/tCK)) Units=nCK | | | | |
|---|---|---|---|---|---|---|---|---|---|
| | | | | ALL mode | 16B mode | | 8B mode | BG mode | |
| | | | | | BL16 | BL32 | BL32 | BL16 | BL32 |
| 533 | 2:1 | 10 | 133 | WL - 1 | WL + 5 | WL + 9 | WL + 9 | - | - |
| 1067 | 2:1 | 133 | 267 | WL - 2 | WL + 5 | WL + 9 | WL + 9 | - | - |
| 1600 | 2:1 | 267 | 400 | WL - 2 | WL + 5 | WL + 9 | WL + 9 | - | - |
| 2133 | 2:1 | 400 | 533 | WL - 3 | WL + 5 | WL + 9 | WL + 9 | - | - |
| 2750 | 2:1 | 533 | 688 | WL - 3 | WL + 5 | WL + 9 | WL + 9 | - | - |
| 3200 | 2:1 | 688 | 800 | WL - 4 | WL + 5 | WL + 9 | WL + 9 | - | - |
| | | | | | | | | | |
| 533 | 4:1 | 5 | 67 | WL - 1 | WL + 3 | WL + 5 | WL + 5 | - | - |
| 1067 | 4:1 | 67 | 133 | WL - 1 | WL + 3 | WL + 5 | WL + 5 | - | - |
| 1600 | 4:1 | 133 | 200 | WL - 1 | WL + 3 | WL + 5 | WL + 5 | - | - |
| 2133 | 4:1 | 200 | 267 | WL - 2 | WL + 3 | WL + 5 | WL + 5 | - | - |
| 2750 | 4:1 | 267 | 344 | WL - 2 | WL + 3 | WL + 5 | WL + 5 | - | - |
| 3200 | 4:1 | 344 | 400 | WL - 2 | WL + 3 | WL + 5 | WL + 5 | - | - |
| 3733 | 4:1 | 400 | 467 | WL - 2 | - | - | WL + 5 | WL + 3 | WL + 7 |
| 4267 | 4:1 | 467 | 533 | WL - 3 | - | - | WL + 5 | WL + 3 | WL + 7 |
| 4800 | 4:1 | 533 | 600 | WL - 3 | - | - | WL + 5 | WL + 3 | WL + 7 |
| 5500 | 4:1 | 600 | 688 | WL - 3 | - | - | WL + 5 | WL + 3 | WL + 7 |
| 6000 | 4:1 | 688 | 750 | WL - 3 | - | - | WL + 5 | WL + 3 | WL + 7 |
| 6400 | 4:1 | 750 | 800 | WL - 3 | - | - | WL + 5 | WL + 3 | WL + 7 |

## Table 245 - Asynchronous NT-ODT Turn On and Turn off Timing for Write

| Parameter | ALL Operation Frequency | Unit |
|---|---|---|
| tODTon,min | 1.5 | ns |
| tODTon,max | 3.5 | ns |
| tODToff,min | 1.5 | ns |
| tODToff,max | 3.5 | ns |

**Table 246 - ODTLon_RD and ODTLoff_RD Latency Values for Read with RDQS disabled (MR0 OP[0]=$0_B$)**

| Data Rate | WCK:CK Ratio | Lower Clock Frequency Limit (>) (MHz) | Upper Clock Frequency Limit (<=) (MHz) | ODTLoff_RD Units=nCK | ODTLon_RD ( RL + BL/n_min + RU(tWCK2DQO(max)/tCK) ) Units=nCK | | | | |
|---|---|---|---|---|---|---|---|---|---|
| | | | | ALL mode | 16B mode | | 8B mode | BG mode | |
| | | | | | BL16 | BL32 | BL32 | BL16 | BL32 |
| 533 | 2:1 | 10 | 133 | RL - 1 | RL + 5 | RL + 9 | RL + 9 | - | - |
| 1067 | 2:1 | 133 | 267 | RL - 2 | RL + 5 | RL + 9 | RL + 9 | - | - |
| 1600 | 2:1 | 267 | 400 | RL - 2 | RL + 5 | RL + 9 | RL + 9 | - | - |
| 2133 | 2:1 | 400 | 533 | RL - 3 | RL + 6 | RL + 10 | RL + 10 | - | - |
| 2750 | 2:1 | 533 | 688 | RL - 3 | RL + 6 | RL + 10 | RL + 10 | - | - |
| 3200 | 2:1 | 688 | 800 | RL - 4 | RL + 6 | RL + 10 | RL + 10 | - | - |
| | | | | | | | | | |
| 533 | 4:1 | 5 | 67 | RL - 1 | RL + 3 | RL + 5 | RL + 5 | - | - |
| 1067 | 4:1 | 67 | 133 | RL - 1 | RL + 3 | RL + 5 | RL + 5 | - | - |
| 1600 | 4:1 | 133 | 200 | RL - 1 | RL + 3 | RL + 5 | RL + 5 | - | - |
| 2133 | 4:1 | 200 | 267 | RL - 2 | RL + 3 | RL + 5 | RL + 5 | - | - |
| 2750 | 4:1 | 267 | 344 | RL - 2 | RL + 3 | RL + 5 | RL + 5 | - | - |
| 3200 | 4:1 | 344 | 400 | RL - 2 | RL + 3 | RL + 5 | RL + 5 | - | - |
| 3733 | 4:1 | 400 | 467 | RL - 2 | - | - | RL + 5 | RL + 3 | RL + 7 |
| 4267 | 4:1 | 467 | 533 | RL - 3 | - | - | RL + 6 | RL + 4 | RL + 8 |
| 4800 | 4:1 | 533 | 600 | RL - 3 | - | - | RL + 6 | RL + 4 | RL + 8 |
| 5500 | 4:1 | 600 | 688 | RL - 3 | - | - | RL + 6 | RL + 4 | RL + 8 |
| 6000 | 4:1 | 688 | 750 | RL - 3 | - | - | RL + 6 | RL + 4 | RL + 8 |
| 6400 | 4:1 | 750 | 800 | RL - 3 | - | - | RL + 6 | RL + 4 | RL + 8 |

**Table 247 - ODTLon_RD and ODTLoff_RD Latency Values for Read with RDQS enabled & MR10 OP[5:4]=$00_B$, $01_B$, $10_B$ (MR0 OP[0]=$0_B$)**

| Data Rate | WCK:CK Ratio | Lower Clock Frequency Limit (>) (MHz) | Upper Clock Frequency Limit (<=) (MHz) | ODTLoff_RD Units=nCK | ODTLon_RD ( RL + BL/n_min + RU(tWCK2DQO(max)/tCK) + 2) Units=nCK at CKR=2:1<br>ODTLon_RD ( RL + BL/n_min + RU(tWCK2DQO(max)/tCK) + 1) Units=nCK at CKR=4:1 | | | | |
|---|---|---|---|---|---|---|---|---|---|
| | | | | ALL mode | 16B mode | | 8B mode | BG mode | |
| | | | | | BL16 | BL32 | BL32 | BL16 | BL32 |
| 533 | 2:1 | 10 | 133 | RL - 3 | RL + 7 | RL + 11 | RL + 11 | - | - |
| 1067 | 2:1 | 133 | 267 | RL - 4 | RL + 7 | RL + 11 | RL + 11 | - | - |
| 1600 | 2:1 | 267 | 400 | RL - 4 | RL + 7 | RL + 11 | RL + 11 | - | - |
| 2133 | 2:1 | 400 | 533 | RL - 5 | RL + 8 | RL + 12 | RL + 12 | - | - |
| 2750 | 2:1 | 533 | 688 | RL - 5 | RL + 8 | RL + 12 | RL + 12 | - | - |
| 3200 | 2:1 | 688 | 800 | RL - 6 | RL + 8 | RL + 12 | RL + 12 | - | - |
| | | | | | | | | | |
| 533 | 4:1 | 5 | 67 | RL - 2 | RL + 4 | RL + 6 | RL + 6 | - | - |
| 1067 | 4:1 | 67 | 133 | RL - 2 | RL + 4 | RL + 6 | RL + 6 | - | - |
| 1600 | 4:1 | 133 | 200 | RL - 2 | RL + 4 | RL + 6 | RL + 6 | - | - |
| 2133 | 4:1 | 200 | 267 | RL - 3 | RL + 4 | RL + 6 | RL + 6 | - | - |
| 2750 | 4:1 | 267 | 344 | RL - 3 | RL + 4 | RL + 6 | RL + 6 | - | - |
| 3200 | 4:1 | 344 | 400 | RL - 3 | RL + 4 | RL + 6 | RL + 6 | - | - |
| 3733 | 4:1 | 400 | 467 | RL - 3 | - | - | RL + 6 | RL + 4 | RL + 8 |
| 4267 | 4:1 | 467 | 533 | RL - 4 | - | - | RL + 7 | RL + 5 | RL + 9 |
| 4800 | 4:1 | 533 | 600 | RL - 4 | - | - | RL + 7 | RL + 5 | RL + 9 |
| 5500 | 4:1 | 600 | 688 | RL - 4 | - | - | RL + 7 | RL + 5 | RL + 9 |
| 6000 | 4:1 | 688 | 750 | RL - 4 | - | - | RL + 7 | RL + 5 | RL + 9 |
| 6400 | 4:1 | 750 | 800 | RL - 4 | - | - | RL + 7 | RL + 5 | RL + 9 |

**Table 248 - ODTLon_RD and ODTLoff_RD Latency Values for Read with RDQS enabled & MR10 OP[5:4]=$11_B$ (MR0 OP[0]=$0_B$)**

| Data Rate | WCK:CK Ratio | Lower Clock Frequency Limit (>) (MHz) | Upper Clock Frequency Limit (<=) (MHz) | ODTLoff_RD Units=nCK | ODTLon_RD ( RL + BL/n_min + RU(tWCK2DQO(max)/tCK) + 1) Units=nCK, at CKR=4:1 | | | | |
|---|---|---|---|---|---|---|---|---|---|
| | | | | ALL mode | 16B mode | | 8B mode | BG mode | |
| | | | | | BL16 | BL32 | BL32 | BL16 | BL32 |
| 3733 | 4:1 | 400 | 467 | RL - 4 | - | - | RL + 6 | RL + 4 | RL + 8 |
| 4267 | 4:1 | 467 | 533 | RL - 5 | - | - | RL + 7 | RL + 5 | RL + 9 |
| 4800 | 4:1 | 533 | 600 | RL - 5 | - | - | RL + 7 | RL + 5 | RL + 9 |
| 5500 | 4:1 | 600 | 688 | RL - 5 | - | - | RL + 7 | RL + 5 | RL + 9 |
| 6000 | 4:1 | 688 | 750 | RL - 5 | - | - | RL + 7 | RL + 5 | RL + 9 |
| 6400 | 4:1 | 750 | 800 | RL - 5 | - | - | RL + 7 | RL + 5 | RL + 9 |

### Table 249 - ODTLon_RD_DQ and ODTLoff_RD_DQ Latency Values for Read (MR0 OP[0]=$1_B$)

| Data Rate | WCK:CK Ratio | Lower Clock Frequency Limit (>) (MHz) | Upper Clock Frequency Limit (<=) (MHz) | ODTLoff_RD_DQ Units=nCK | ODTLon_RD_DQ ( RL + BL/n_min + RU(tWCK2DQO(max)/tCK) ) Units=nCK | | | | |
|---|---|---|---|---|---|---|---|---|---|
| | | | | ALL mode | 16B mode | | 8B mode | BG mode | |
| | | | | | BL16 | BL32 | BL32 | BL16 | BL32 |
| 533 | 2:1 | 10 | 133 | RL - 1 | RL + 5 | RL + 9 | RL + 9 | - | - |
| 1067 | 2:1 | 133 | 267 | RL - 2 | RL + 5 | RL + 9 | RL + 9 | - | - |
| 1600 | 2:1 | 267 | 400 | RL - 2 | RL + 5 | RL + 9 | RL + 9 | - | - |
| 2133 | 2:1 | 400 | 533 | RL - 3 | RL + 6 | RL + 10 | RL + 10 | - | - |
| 2750 | 2:1 | 533 | 688 | RL - 3 | RL + 6 | RL + 10 | RL + 10 | - | - |
| 3200 | 2:1 | 688 | 800 | RL - 4 | RL + 6 | RL + 10 | RL + 10 | - | - |
| | | | | | | | | | |
| 533 | 4:1 | 5 | 67 | RL - 1 | RL + 3 | RL + 5 | RL + 5 | - | - |
| 1067 | 4:1 | 67 | 133 | RL - 1 | RL + 3 | RL + 5 | RL + 5 | - | - |
| 1600 | 4:1 | 133 | 200 | RL - 1 | RL + 3 | RL + 5 | RL + 5 | - | - |
| 2133 | 4:1 | 200 | 267 | RL - 2 | RL + 3 | RL + 5 | RL + 5 | - | - |
| 2750 | 4:1 | 267 | 344 | RL - 2 | RL + 3 | RL + 5 | RL + 5 | - | - |
| 3200 | 4:1 | 344 | 400 | RL - 2 | RL + 3 | RL + 5 | RL + 5 | - | - |
| 3733 | 4:1 | 400 | 467 | RL - 2 | - | - | RL + 5 | RL + 3 | RL + 7 |
| 4267 | 4:1 | 467 | 533 | RL - 3 | - | - | RL + 6 | RL + 4 | RL + 8 |
| 4800 | 4:1 | 533 | 600 | RL - 3 | - | - | RL + 6 | RL + 4 | RL + 8 |
| 5500 | 4:1 | 600 | 688 | RL - 3 | - | - | RL + 6 | RL + 4 | RL + 8 |
| 6000 | 4:1 | 688 | 750 | RL - 3 | - | - | RL + 6 | RL + 4 | RL + 8 |
| 6400 | 4:1 | 750 | 800 | RL - 3 | - | - | RL + 6 | RL + 4 | RL + 8 |

**Table 250 - ODTLon_RD_RDQS and ODTLoff_RD_RDQS Latency Values for Read with RDQS disabled (MR0 OP[0]=$1_B$)**

| Data Rate | WCK:CK Ratio | Lower Clock Frequency Limit (>) (MHz) | Upper Clock Frequency Limit (<=) (MHz) | ODTLoff_RD_RDQS Units=nCK | ODTLon_RD_RDQS ( RL + BL/n_min + RU(tWCK2DQO(max)/tCK) ) Units=nCK | | | | |
|---|---|---|---|---|---|---|---|---|---|
| | | | | ALL mode | 16B mode | | 8B mode | BG mode | |
| | | | | | BL16 | BL32 | BL32 | BL16 | BL32 |
| 533 | 2:1 | 10 | 133 | RL - 1 | RL + 5 | RL + 9 | RL + 9 | - | - |
| 1067 | 2:1 | 133 | 267 | RL - 2 | RL + 5 | RL + 9 | RL + 9 | - | - |
| 1600 | 2:1 | 267 | 400 | RL - 2 | RL + 5 | RL + 9 | RL + 9 | - | - |
| 2133 | 2:1 | 400 | 533 | RL - 3 | RL + 6 | RL + 10 | RL + 10 | - | - |
| 2750 | 2:1 | 533 | 688 | RL - 3 | RL + 6 | RL + 10 | RL + 10 | - | - |
| 3200 | 2:1 | 688 | 800 | RL - 4 | RL + 6 | RL + 10 | RL + 10 | - | - |
| | | | | | | | | | |
| 533 | 4:1 | 5 | 67 | RL - 1 | RL + 3 | RL + 5 | RL + 5 | - | - |
| 1067 | 4:1 | 67 | 133 | RL - 1 | RL + 3 | RL + 5 | RL + 5 | - | - |
| 1600 | 4:1 | 133 | 200 | RL - 1 | RL + 3 | RL + 5 | RL + 5 | - | - |
| 2133 | 4:1 | 200 | 267 | RL - 2 | RL + 3 | RL + 5 | RL + 5 | - | - |
| 2750 | 4:1 | 267 | 344 | RL - 2 | RL + 3 | RL + 5 | RL + 5 | - | - |
| 3200 | 4:1 | 344 | 400 | RL - 2 | RL + 3 | RL + 5 | RL + 5 | - | - |
| 3733 | 4:1 | 400 | 467 | RL - 2 | - | - | RL + 5 | RL + 3 | RL + 7 |
| 4267 | 4:1 | 467 | 533 | RL - 3 | - | - | RL + 6 | RL + 4 | RL + 8 |
| 4800 | 4:1 | 533 | 600 | RL - 3 | - | - | RL + 6 | RL + 4 | RL + 8 |
| 5500 | 4:1 | 600 | 688 | RL - 3 | - | - | RL + 6 | RL + 4 | RL + 8 |
| 6000 | 4:1 | 688 | 750 | RL - 3 | - | - | RL + 6 | RL + 4 | RL + 8 |
| 6400 | 4:1 | 750 | 800 | RL - 3 | - | - | RL + 6 | RL + 4 | RL + 8 |

**Table 251 - ODTLon_RD_RDQS and ODTLoff_RD_RDQS Latency Values for Read with RDQS enabled & MR10 OP[5:4]=$00_B$, $01_B$, $10_B$ (MR0 OP[0]=$1_B$)**

| Data Rate | WCK:CK Ratio | Lower Clock Frequency Limit (>) (MHz) | Upper Clock Frequency Limit (<=) (MHz) | ODTLoff_RD_RDQS Units=nCK | ODTLon_RD_RDQS ( RL + BL/n_min + RU(tWCK2DQO(max)/tCK) + 2) Units=nCK at CKR=2:1<br>ODTLon_RD_RDQS ( RL + BL/n_min + RU(tWCK2DQO(max)/tCK) + 1) Units=nCK at CKR=4:1 | | | | |
|---|---|---|---|---|---|---|---|---|---|
| | | | | ALL mode | 16B mode | | 8B mode | BG mode | |
| | | | | | BL16 | BL32 | BL32 | BL16 | BL32 |
| 533 | 2:1 | 10 | 133 | RL - 3 | RL + 7 | RL + 11 | RL + 11 | - | - |
| 1067 | 2:1 | 133 | 267 | RL - 4 | RL + 7 | RL + 11 | RL + 11 | - | - |
| 1600 | 2:1 | 267 | 400 | RL - 4 | RL + 7 | RL + 11 | RL + 11 | - | - |
| 2133 | 2:1 | 400 | 533 | RL - 5 | RL + 8 | RL + 12 | RL + 12 | - | - |
| 2750 | 2:1 | 533 | 688 | RL - 5 | RL + 8 | RL + 12 | RL + 12 | - | - |
| 3200 | 2:1 | 688 | 800 | RL - 6 | RL + 8 | RL + 12 | RL + 12 | - | - |
| | | | | | | | | | |
| 533 | 4:1 | 5 | 67 | RL - 2 | RL + 4 | RL + 6 | RL + 6 | - | - |
| 1067 | 4:1 | 67 | 133 | RL - 2 | RL + 4 | RL + 6 | RL + 6 | - | - |
| 1600 | 4:1 | 133 | 200 | RL - 2 | RL + 4 | RL + 6 | RL + 6 | - | - |
| 2133 | 4:1 | 200 | 267 | RL - 3 | RL + 4 | RL + 6 | RL + 6 | - | - |
| 2750 | 4:1 | 267 | 344 | RL - 3 | RL + 4 | RL + 6 | RL + 6 | - | - |
| 3200 | 4:1 | 344 | 400 | RL - 3 | RL + 4 | RL + 6 | RL + 6 | - | - |
| 3733 | 4:1 | 400 | 467 | RL - 3 | - | - | RL + 6 | RL + 4 | RL + 8 |
| 4267 | 4:1 | 467 | 533 | RL - 4 | - | - | RL + 7 | RL + 5 | RL + 9 |
| 4800 | 4:1 | 533 | 600 | RL - 4 | - | - | RL + 7 | RL + 5 | RL + 9 |
| 5500 | 4:1 | 600 | 688 | RL - 4 | - | - | RL + 7 | RL + 5 | RL + 9 |
| 6000 | 4:1 | 688 | 750 | RL - 4 | - | - | RL + 7 | RL + 5 | RL + 9 |
| 6400 | 4:1 | 750 | 800 | RL - 4 | - | - | RL + 7 | RL + 5 | RL + 9 |

**Table 252 - ODTLon_RD_RDQS and ODTLoff_RD_RDQS Latency Values for Read with RDQS enabled & MR10 OP[5:4]=$11_B$ (MR0 OP[0]=$1_B$)**

| Data Rate | WCK:CK Ratio | Lower Clock Frequency Limit (>) (MHz) | Upper Clock Frequency Limit (<=) (MHz) | ODTLoff_RD_RDQS Units=nCK | ODTLon_RD_RDQS ( RL + BL/n_min + RU(tWCK2DQO(max)/tCK) + 1) Units=nCK, at CKR=4:1 | | | | |
|---|---|---|---|---|---|---|---|---|---|
| | | | | ALL mode | 16B mode | | 8B mode | BG mode | |
| | | | | | BL16 | BL32 | BL32 | BL16 | BL32 |
| 3733 | 4:1 | 400 | 467 | RL - 4 | - | - | RL + 6 | RL + 4 | RL + 8 |
| 4267 | 4:1 | 467 | 533 | RL - 5 | - | - | RL + 7 | RL + 5 | RL + 9 |
| 4800 | 4:1 | 533 | 600 | RL - 5 | - | - | RL + 7 | RL + 5 | RL + 9 |
| 5500 | 4:1 | 600 | 688 | RL - 5 | - | - | RL + 7 | RL + 5 | RL + 9 |
| 6000 | 4:1 | 688 | 750 | RL - 5 | - | - | RL + 7 | RL + 5 | RL + 9 |
| 6400 | 4:1 | 750 | 800 | RL - 5 | - | - | RL + 7 | RL + 5 | RL + 9 |

**Table 253 - Asynchronous NT-ODT Turn On and Turn Off Timing**

| Parameter | ALL Operation Frequency | Unit |
|---|---|---|
| tODT_RDon,min | 1.5 | ns |
| tODT_RDon,max | 3.5 | ns |
| tODT_RDoff,min | 1.5 | ns |
| tODT_RDoff,max | 3.5 | ns |

### 7.6.5.3 Timing diagram of Write case

In Non-target DRAM ODT enabled mode, ODT timings (ODTLon and ODTLoff) are referenced to WL after the write command and the ODT value in target rank can be updated within tODTon,max as shown in **Figure 168**. After write operation, target ODT value should be recovered to pre-defined Non-target DRAM ODT value within the tODToff,max.

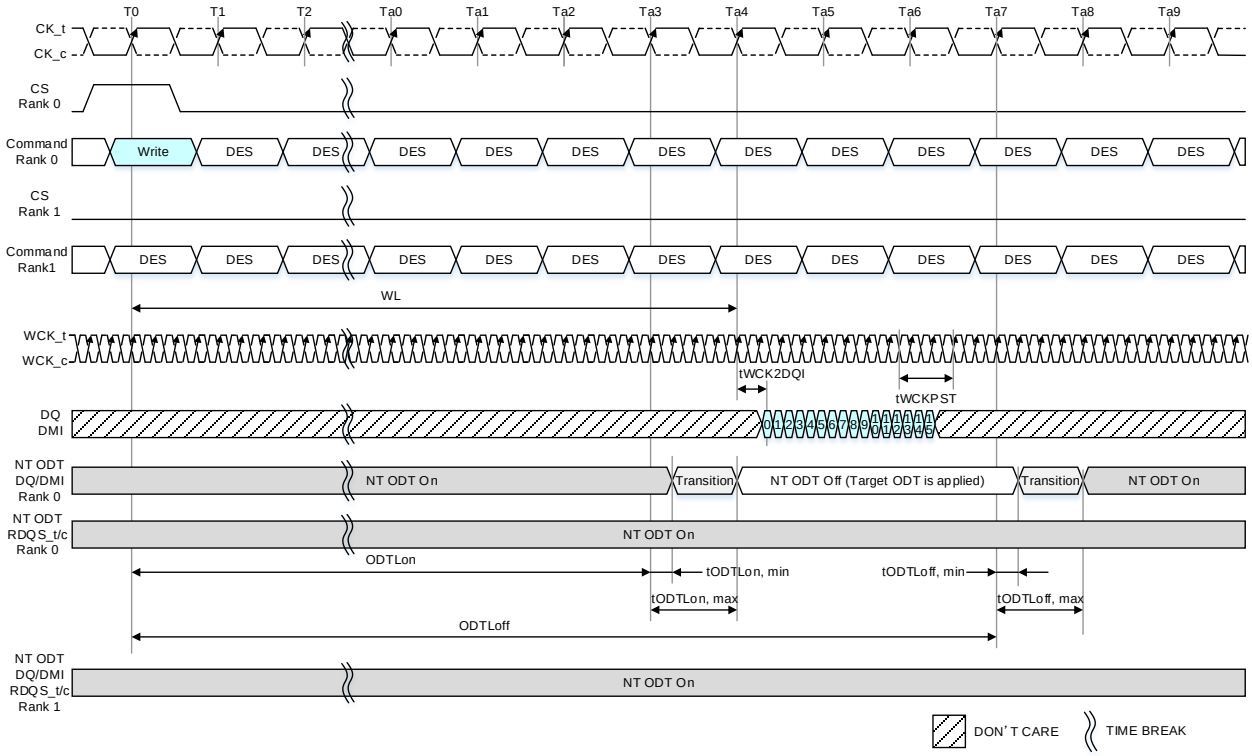


NOTE 1 tWCK2CK is 0ps in this instance.
NOTE 2 ODTLon=WL-1, ODTLoff=WL+3
NOTE 3 In case of NT-ODT is applied for DMI.
NOTE 4 Write Link ECC is disabled.

**Figure 168 - ODT, NT ODT Timing for Write BG Mode: CKR (WCK vs. CK) = 4:1, BL=16**

### 7.6.5.4 Timing diagram of Read case

In Non-target DRAM ODT enabled mode, ODT timings (ODTLoff_RD/RD_DQ/RDQS) are referenced to RL after the read command and the ODT value in target rank is disabled within tODT_RDoff,max as shown in **Figure 169**. After read operation, disabled ODT should be recovered to pre-defined Non-target DRAM ODT value within the tODT_RDon,max.

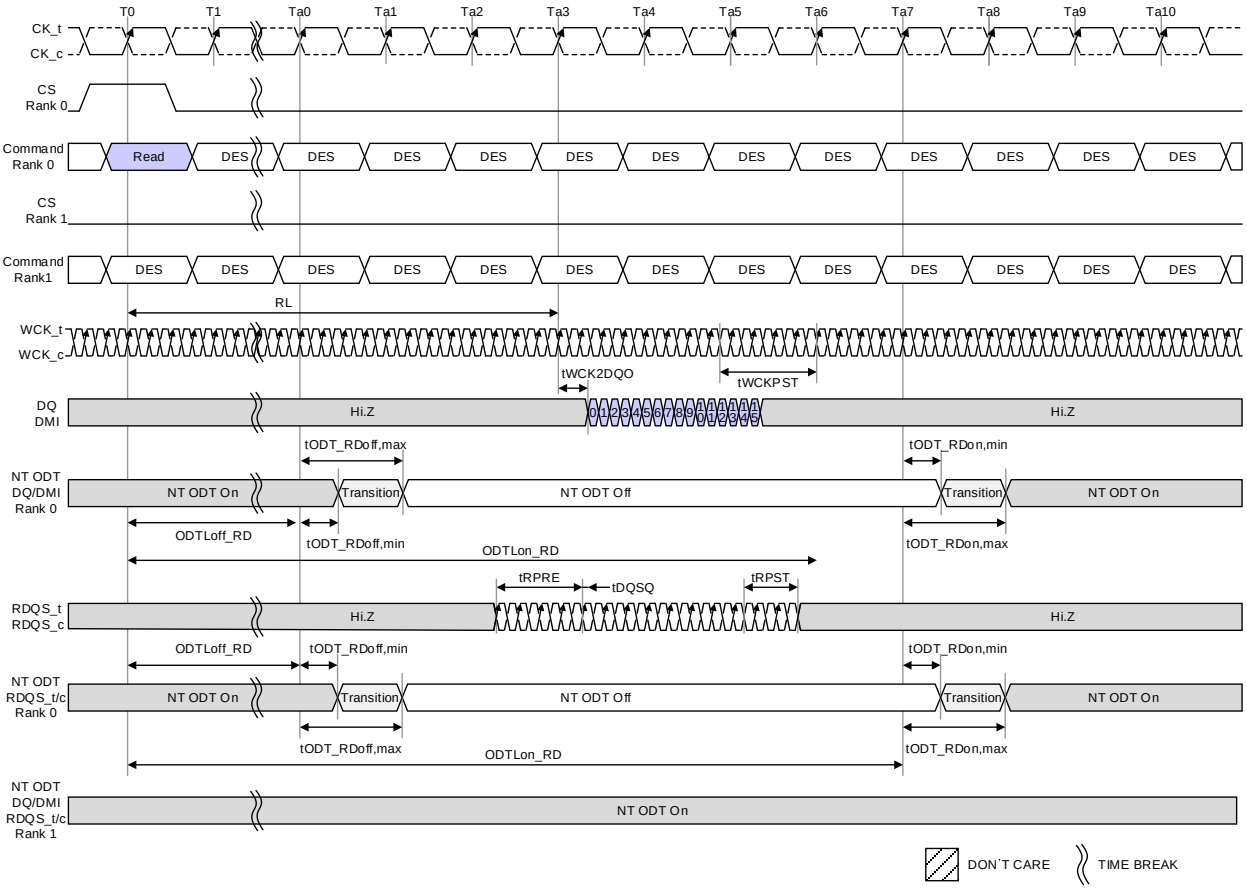


NOTE 1 tWCK2CK is 0ps in this instance.
NOTE 2 ODT/NT-ODT turned on/off timing for DQ and RDQS is merged.

**Figure 169 - ODT Control on Non-target DRAM for Read (MR0 OP[0]=$0_B$)**

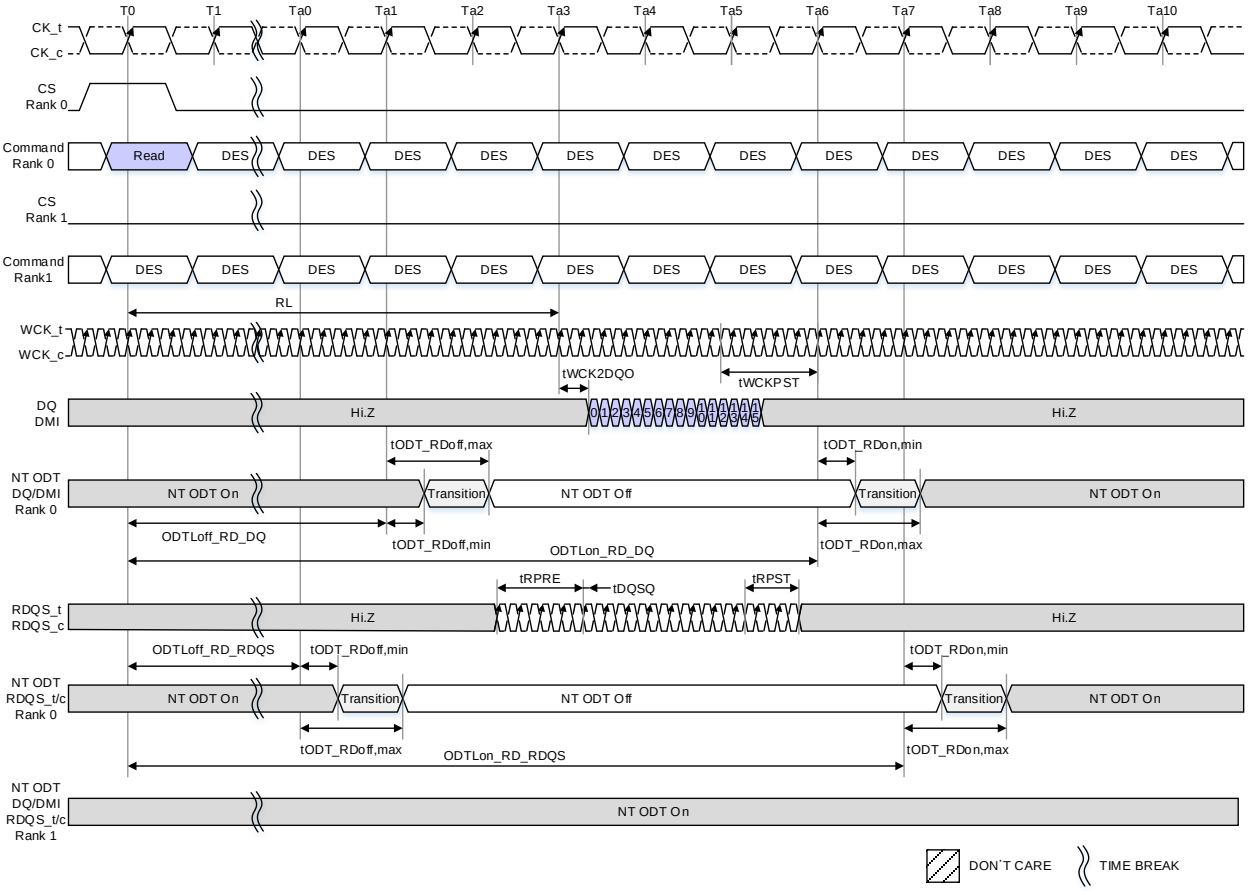


NOTE 1 tWCK2CK is 0ps in this instance.
NOTE 2 ODT/NT-ODT turned on/off timing for DQ and RDQS is separated.

**Figure 170 - ODT Control on Non-target DRAM for Read (MR0 OP[0]=$1_B$)**

### 7.6.5.5 Rank2Rank Timing diagram of Write to Read case

In Non-target DRAM ODT enabled mode, Write to Read command constraint in Rank2Rank operation MR0 OP[0] = $1_B$(RDQS/DQ NT-ODT control Separated) is shorter than MR0 OP[0]=$0_B$(RDQS/DQ NT-ODT control merged). Refer to **Figure 171** and **Figure 172**.

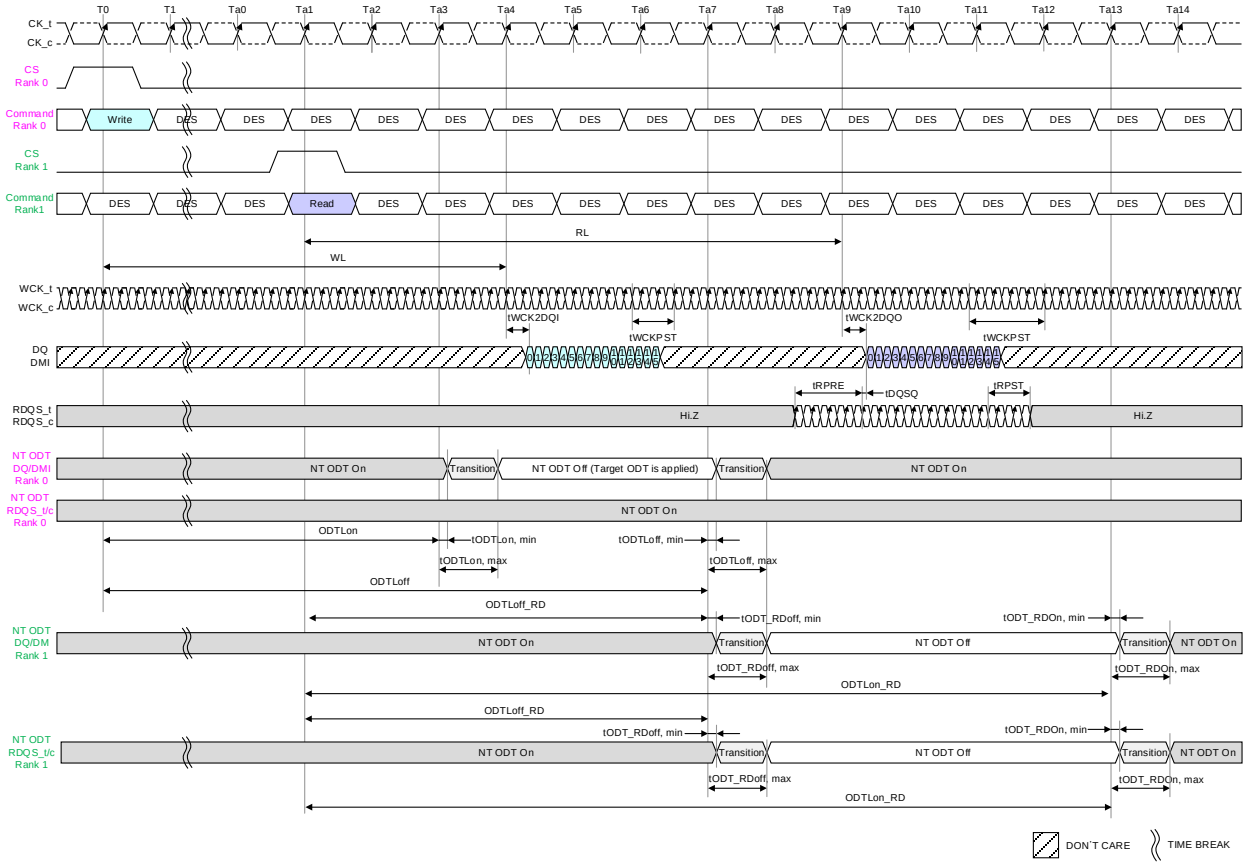


NOTE 1 tWCK2CK is 0ps in this instance.
NOTE 2 ODTLon=WL-1, ODTLoff=WL+3
NOTE 3 In case of NT-ODT is applied for DMI.
NOTE 4 Write Link ECC is disabled.
NOTE 5 ODTLoff_RD =RL-2, ODTLon_RD =RL+4
NOTE 6 ODT/NT-ODT turned on/off timing for DQ and RDQS is merged.

**Figure 171 - Write to Read Rank2Rank Operation (MR OP[0]=$0_B$)**

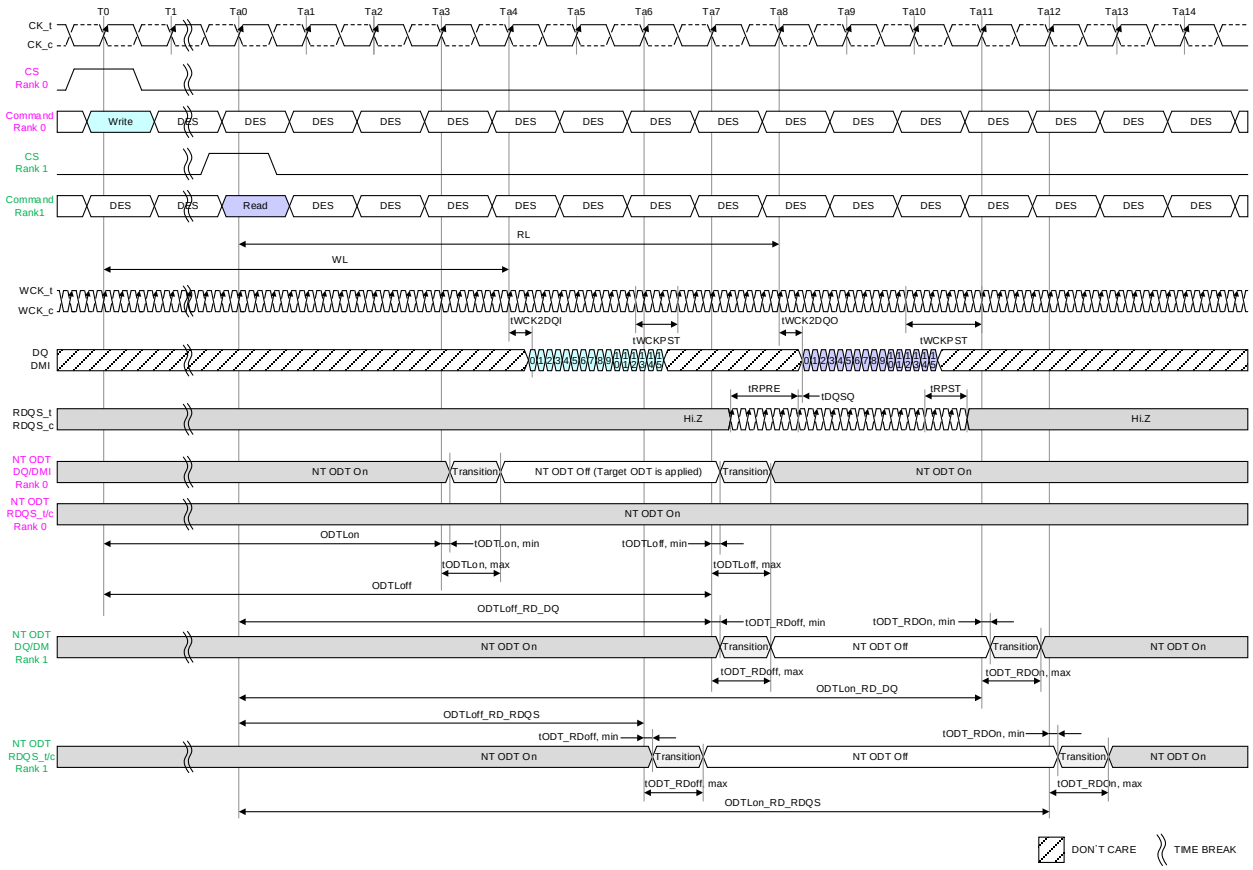


**Figure 172 - Write to Read Rank2Rank Operation (MR OP[0]=$1_B$)**

### 7.6.5.6 NT-ODT setting by MRW command

The NT-ODT is enabled by MR11 OP[3]=$1_B$, and then the NT-ODT status of SDRAM is move to NT-ODT value set by MR41 OP[7:5], in case of changing MR41 OP[7:5] from $000_B$ to another setting is same as to move from MR11 OP[3]=$0_B$ to MR11 OP[3] =$1_B$ too.

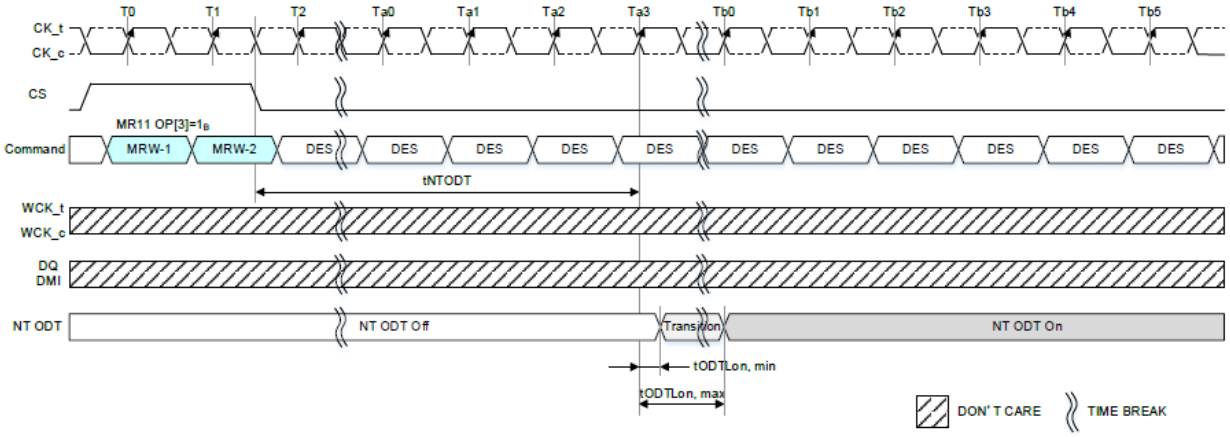


**Figure 173 – NT-ODT turn-on timing by MRW command**

The NT-ODT is disabled by MR11 OP[3]=$0_B$, and then the NT-ODT status of SDRAM is move to NT-ODT off mode, in case of changing MR41 OP[7:5] to $000_B$ from another setting is same as to move from MR11 OP[3]=$1_B$ to MR11 OP[3] =$0_B$ too.

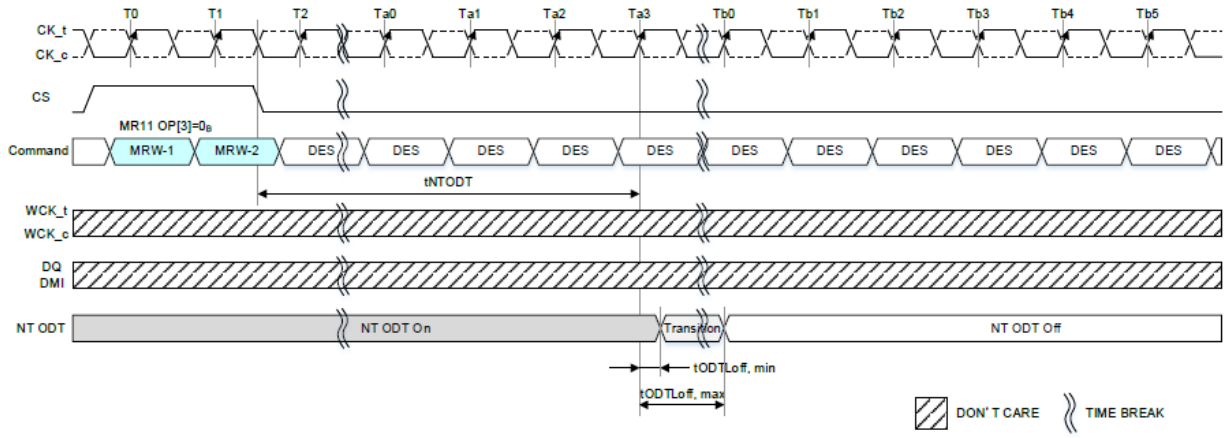


**Figure 174 – NT-ODT turn-off timing by MRW command**

Figure 175 shows NT-ODT value change by MRW command.

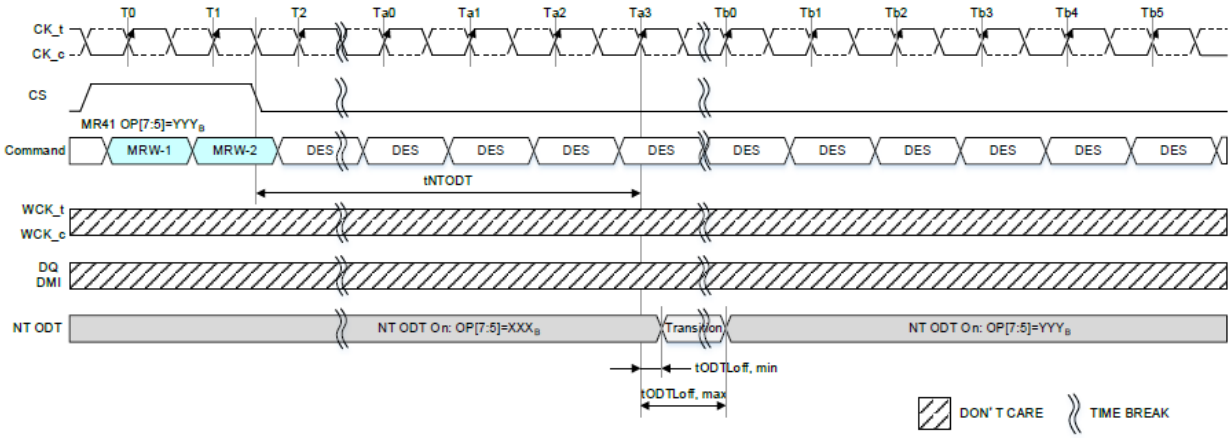


**Figure 175 – NT-ODT Value change by MRW command**

This timing also applies in case of accompanying active/inactive switching for DMI and RDQS_t pin by MR setting.

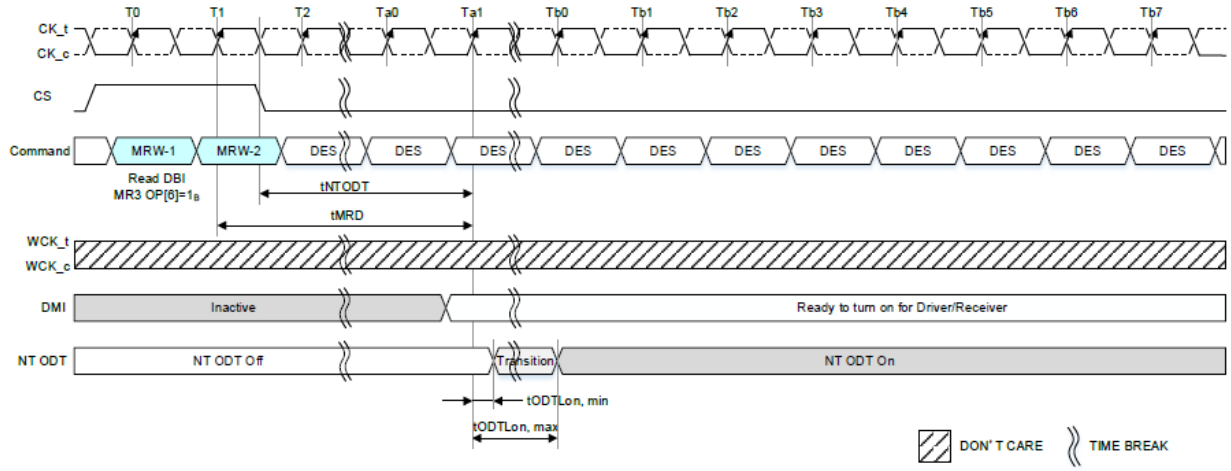


**Figure 176 – NT-ODT's turn-on timing associated with DMI activated: In case of Read DBI enable**

**Table 254 – NT-ODT AC timing**

| Parameters | Symbol | Min/Max | Value | Unit | Notes |
|---|---|---|---|---|---|
| Delay from MRW command to NT-ODT switching | tNTODT | Min | Max (14ns, 5nCK) | - | 1 |

NOTE 1 tNTODT is defined as the delay time from MRW-2 command (the falling edge of the CK_t) to start point of tODTLon/tODTLoff. Which tODTLon or tODTLoff applies depends on the previous NT-ODT status.

### 7.6.6 NT-ODT behavior unification

LPDDR5 SDRAM supports the unified NT-ODT behavior as optional feature to reduce one bubble in the Write to Read operation in multi rank case when Write Link ECC is disabled and to simplify the handling of NT-ODT timing.
MR0 OP[5] indicates whether the unified NT-ODT behavior is supported or not.

- MR0 OP[5]=$0_B$
  The NT-ODT behavior does not follow the unified NT-ODT behavior.
  See vendor's data sheet for detail of NT-ODT behavior.
- MR0 OP[5]=$1_B$
  The NT-ODT behavior follow the unified NT-ODT behavior which defined in this section.

#### 7.6.6.1 Unified NT-ODT behavior

Once NT-ODT is enabled, termination by NT-ODT for DQ, DMI and RDQS pins are continuing until NT-ODT is disabled or SDRAM will be reset, except following case.

- DQ
  - During the input receiver turned on (Write operation for example).
  - During the output driver turned on (Read operation for example).
- DMI
  - DMI is disabled by MR setting.
  - During the input receiver turned on.
  - During the output driver turned on.
- RDQS_t
  - RDQS_t is disabled by MR setting.
  - During the input receiver turned on.
  - During the output driver turned on.
- RDQS_c
  - RDQS_c is disabled by MR setting.
  - During the output driver turned on.

In Non-Target ODT (NT-ODT) mode, Target DRAM ODT and Non-Target DRAM ODT can be set by MR11 and MR41 and a possible combination is shown in **Table 257**. NT-ODT needs to be used with Target ODT. It means that a following MR combination is inhibited: DQ ODT: MR11 OP[2:0] =$000_B$ and NT-ODT Enable: MR11 OP[3]=$1_B$. If using NT-ODT function, following things should be considered: $V_{IH}$ specification of DQ is satisfied for Write operation. In Read operation, since SDRAM calibrates Pull-Up strength to satisfy $V_{OH}$ specification according as SoC ODT of MR17 OP[2:0], SoC ODT of MR17 OP[2:0] should be the same as equivalent resistance of NT-ODT (MR41 OP[7:5]) and ODT of SoC Rx. Notice that the ODT value of non-target rank should be always one fixed level irrespective of read/write operation and NT-ODT should be disabled in case of VRO enabled by MR13 OP[2]. Refer to the table below for more information.
Following MR setting, SDRAMs connected to the same data bus line is required to have same setting.

- MR22 OP[5:4]: Write Link ECC
- MR22 OP[7:6]: Read Link ECC
- MR3 OP[7]: DBI-WR
- MR3 OP[6]: DBI RD
- MR13 OP[5]: DMD
- MR21 OP[5]: RDCFE
- MR20 OP[1:0]: RDQS
- MR46 OP[2]: WCK-DQS_t/Parity Training
- MR26 OP[7] Read/Write-based WCK-RDQS_t Training

**Table 255 - Normal Mode vs. NT-ODT Mode for Write Operation**

| Mode MR11 OP[3] | Target Rank ODT | Non-Target Rank ODT | Equivalent ODT of 2-Rank DRAM |
|---|---|---|---|
| OP[3]=0 (Normal Mode) | MR11 OP[2:0] ($ODT_T$) | Disable | $ODT_T$ |
| OP[3]=1 (NT-ODT Mode) | MR11 OP[2:0] ($ODT_T$) | MR41 OP[7:5] ($ODT_{NT}$) | $ODT_T$ \|\| $ODT_{NT}$ |

**Table 256 - Normal Mode vs. NT-ODT Mode for Read Operation**

| Mode MR11 OP[3] | Non-Target Rank ODT | SoC Rx ODT | Equivalent ODT for RD operation | MR17 OP[2:0] (SoC ODT for DRAM Pull-Up Cal.) |
|---|---|---|---|---|
| OP[3]=0 (Normal Mode) | Disable | $ODT_{SOC}$ | $ODT_{SOC}$ | $ODT_{SOC}$ |
| OP[3]=1 (NT-ODT Mode) | MR41 OP[7:5] ($ODT_{NT}$) | $ODT_{SOC}$ | $ODT_{NT}$ \|\| $ODT_{SOC}$ | $ODT_{NT}$ \|\| $ODT_{SOC}$[1] |

NOTE 1 Since SoC ODT of MR17 can only support RZQ/n (n=1,2,3,4,5,6), (ODTNT||ODTSOC) should be one of RZQ/1, RZQ/2, RZQ/3, RZQ/4, RZQ/5, and RZQ/6.

**Table 257** shows all combinations that equivalent ODT is RZQ/1, RZQ/2, RZQ/3, RZQ/4, RZQ/5, or RZQ/6.

**Table 257 - Combination of Target ODT, Non-target ODT and SoC ODT**

| $ODT_{NT}$ | $ODT_T$ | $ODT_{SoC}$ | Write ($ODT_{eq}=ODT_{NT} // ODT_T$) | Read (SoC ODT MR17 OP[2:0]) |
|---|---|---|---|---|
| RZQ/1 | RZQ/1 | RZQ/0 | RZQ/2 | RZQ/1 |
| | RZQ/2 | RZQ/1 | RZQ/3 | RZQ/2 |
| | RZQ/3 | RZQ/2 | RZQ/4 | RZQ/3 |
| | RZQ/4 | RZQ/3 | RZQ/5 | RZQ/4 |
| | RZQ/5 | RZQ/4 | RZQ/6 | RZQ/5 |
| | - | RZQ/5 | - | RZQ/6 |
| RZQ/2 | RZQ/1 | RZQ/0 | RZQ/3 | RZQ/2 |
| | RZQ/2 | RZQ/1 | RZQ/4 | RZQ/3 |
| | RZQ/3 | RZQ/2 | RZQ/5 | RZQ/4 |
| | RZQ/4 | RZQ/3 | RZQ/6 | RZQ/5 |
| | - | RZQ/4 | - | RZQ/6 |
| RZQ/3 | RZQ/1 | RZQ/0 | RZQ/4 | RZQ/3 |
| | RZQ/2 | RZQ/1 | RZQ/5 | RZQ/4 |
| | RZQ/3 | RZQ/2 | RZQ/6 | RZQ/5 |
| | - | RZQ/3 | - | RZQ/6 |
| RZQ/4 | RZQ/1 | RZQ/0 | RZQ/5 | RZQ/4 |
| | RZQ/2 | RZQ/1 | RZQ/6 | RZQ/5 |
| | - | RZQ/2 | - | RZQ/6 |
| RZQ/5 | RZQ/1 | RZQ/0 | RZQ/6 | RZQ/5 |
| | - | RZQ/1 | - | RZQ/6 |
| RZQ/6 | RZQ/0 | RZQ/0 | RZQ/6 | RZQ/6 |

### 7.6.6.2 Effective MR set for NT ODT

The following MR setting affect NT-ODT behavior.

- The NT-ODT does not apply to DMI if all of the following function is disabled.
  - MR3 OP[6]: DBI-Read select
  - MR3 OP[7]: DBI-Write select
  - MR13 OP[5]: Data Mask Disable
  - MR21 OP[5]: READ Data Copy Function Enable
  - MR22 OP[7:6]: Read link ECC Control

**Table 258 - NT ODT behavior of DMI by MR setting**

| Function | | | | | NT ODT to DMI |
|---|---|---|---|---|---|
| MR3 OP[6] DBI-Read | MR3 OP[7] DBI-Write | MR13 OP[5] Data Mask | MR21 OP[5] READ Data Copy | MR22 OP[7:6] Read Link ECC | |
| $0_B$ (Disable) | $0_B$ (Disable) | $1_B$ (Disable) | $0_B$ (Disable) | $00_B$ (Disable) | NT ODT is not applied. |
| Other than those above | | | | | NT ODT is applied. |

NOTE 1 The following MR setting is inhibited when MR46 OP[2] =$1_B$.
DBI-Read: MR3 OP[6]=$0_B$, DBI-Write: MR3 OP[7]=$0_B$, Data Mask: MR13 OP[5]=$1_B$, READ Data Copy: MR21 OP[5]=$0_B$, Read Link ECC: MR22 OP[7:6]=$00_B$

- The NT-ODT does not apply to RDQS_t if all of the following function is disabled.
  - MR20 OP[1:0]: Read DQS
  - MR22 OP[5:4]: Write link ECC Control
  - MR46 OP[2]: WCK-RDQS_t/Parity Training

**Table 259 - NT ODT behavior of RDQS_t by MR setting**

| MR46 OP[2] WCK-RDQS_t/Parity Training | MR26 OP[7] Read/Write-based WCK-RDQS_t Training | MR20 OP[1:0] Read DQS | MR22 OP[5:4] Write Link ECC | NT ODT to RDQS_t |
|---|---|---|---|---|
| $0_B$ (Disable) | $0_B$ (Disable) | $00_B$ or $11_B$ (Disable) | $00_B$ (Disable) | NT ODT is not applied |
| $0_B$ (Disable) | $0_B$ (Disable) | $00_B$ or $11_B$ (Disable) | $01_B$ (Enable) | NT ODT is applied |
| $0_B$ (Disable) | $0_B$ (Disable) | $01_B$ or $10_B$ (Enable) | $00_B$ (Disable) | NT ODT is applied |
| $0_B$ (Disable) | $0_B$ (Disable) | $01_B$ or $10_B$ (Enable) | $01_B$ (Enable) | NT ODT is applied |
| $0_B$ (Disable) | $1_B$ (Enable) | $00_B$ or $11_B$ (Disable) | $00_B$ (Disable) | NT ODT is applied |
| $0_B$ (Disable) | $1_B$ (Enable) | $00_B$ or $11_B$ (Disable) | $01_B$ (Enable) | NT ODT is applied |
| $0_B$ (Disable) | $1_B$ (Enable) | $01_B$ or $10_B$ (Enable) | $00_B$ (Disable) | NT ODT is applied |
| $0_B$ (Disable) | $1_B$ (Enable) | $01_B$ or $10_B$ (Enable) | $01_B$ (Enable) | NT ODT is applied |
| $1_B$ (Enable) | $0_B$ (Disable) | $00_B$ or $11_B$ (Disable) | $00_B$ (Disable) | Prohibited setting |
| $1_B$ (Enable) | $0_B$ (Disable) | $00_B$ or $11_B$ (Disable) | $01_B$ (Enable) | NT ODT is applied |
| $1_B$ (Enable) | $0_B$ (Disable) | $01_B$ or $10_B$ (Enable) | $00_B$ (Disable) | Prohibited setting |
| $1_B$ (Enable) | $0_B$ (Disable) | $01_B$ or $10_B$ (Enable) | $01_B$ (Enable) | NT ODT is applied |
| $1_B$ (Enable) | $1_B$ (Enable) | $00_B$ or $11_B$ (Disable) | $00_B$ (Disable) | Prohibited setting |
| $1_B$ (Enable) | $1_B$ (Enable) | $00_B$ or $11_B$ (Disable) | $01_B$ (Enable) | Prohibited setting |
| $1_B$ (Enable) | $1_B$ (Enable) | $01_B$ or $10_B$ (Enable) | $00_B$ (Disable) | Prohibited setting |
| $1_B$ (Enable) | $1_B$ (Enable) | $01_B$ or $10_B$ (Enable) | $01_B$ (Enable) | Prohibited setting |

- The NT-ODT does not apply to RDQS_c if Read DQS function for RDQS_c is disabled.
  - MR20 OP[1:0]: Read DQS

**Table 260 - NT ODT behavior of RDQS_c by MR setting**

| Function | NT ODT to RDQS_c |
|---|---|
| MR20 OP[1:0] Read DQS | |
| $00_B$ (Disable) | NT ODT is not applied. |
| $01_B$ (Disable) | NT ODT is not applied. |
| Other than those above | NT ODT is applied. |

#### 7.6.6.3 Asynchronous NT-ODT

The NT-ODT is enabled by MR11 OP[3] and a target ODT of SDRAM is controlled by Write related command such as Write, Mask Write command or Read related command such as Read and MRR command. The ODT of each SDRAM is turned on with NT-ODT value (MR41 OP[2:0]). When Write, Mask Write or Read command is issued to the target DRAM, according to timing parameters like ODTLon_(RD_DQ/RDQS), tODT_RDon, ODTLoff_(RD_DQ/RDQS) or tODT_RDoff, the ODT of the target DRAM is controlled.

Following timing parameters apply when DRAM NT-ODT mode is enabled.

- ODTLon, tODTon,min, tODTon,max
- ODTLoff, tODToff,min, tODToff,max
- ODTLon_RD_DQ/ODTLon_RD_RDQS, tODT_RDon,min, tODT_RDon,max
- ODTLoff_RD_DQ/ ODTLoff_RD_RDQS, tODT_RDoff,min, tODT_RDoff,max

##### 7.6.6.3.1 NT-ODT behavior for Write operation

ODTLon is a synchronous parameter and it is the latency from the Write related command such as Write or Mask Write command (the rising edge of the clock) to tODTon reference. ODTLon latency is a fixed latency value for each operation frequency range. Each operation frequency range has a different ODTLon latency. Minimum RTT turn-on time (tODTon,min) is the point in time when the device termination circuit leaves high impedance state and NT-ODT resistance begins to turn on. Maximum RTT turn-on time (tODTon,max) is the point in time when the ODT resistance is fully on. tODTon,min and tODTon,max are measured once ODTLon latency is satisfied from the Write or Mask Write command.

ODTLoff is a synchronous parameter and it is the latency from the Write or Mask Write command (the rising edge of the clock) to tODToff reference. ODTLoff latency is a fixed latency value for each operation frequency range. Each operation frequency range has a different ODTLoff latency. Minimum RTT turn-off time (tODToff,min) is the point in time when the device termination circuit starts to turn off the NT-ODT resistance. Maximum NT-ODT turn-off time (tODToff,max) is the point in time when the on-die termination has reached high impedance. tODToff,min and tODToff,max are measured once ODTLoff latency is satisfied from the Write or Mask Write command.

In Non-target DRAM ODT enabled mode, ODT timings (ODTLon and ODTLoff) are referenced to the Write command and the ODT value in target rank can be updated within tODTLon,max as shown in **Figure 177**. After write operation, target ODT value should be recovered to pre-defined Non-target DRAM ODT value within the tODToff,max.

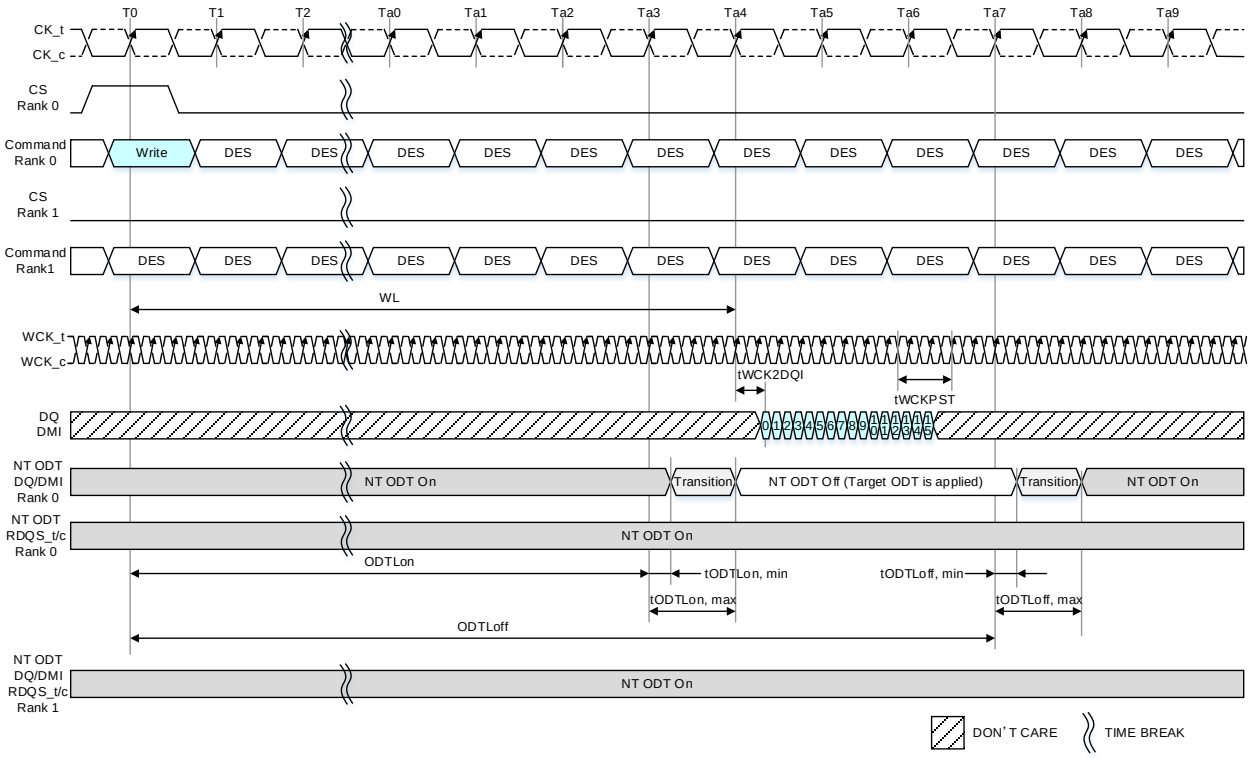


NOTE 1 tWCK2CK is 0ps in this instance.
NOTE 2 ODTLon=WL-1, ODTLoff=WL+3
NOTE 3 In case of NT-ODT is applied for DMI.
NOTE 4 Write Link ECC is disabled.

**Figure 177 - ODT, NT ODT Timing for Write BG Mode: CKR (WCK vs. CK) = 4:1, BL=16**

**Table 261 - ODTLon and ODTLoff Latency Values for Write**

| Data Rate | WCK:CK Ratio | Lower Clock Frequency Limit (>) (MHz) | Upper Clock Frequency Limit (≤) (MHz) | ODTLon Units=nCK | ODTLoff (WL + BL/n_min + RU(tWCK2DQI(max)/tCK)) Units=nCK | | | | |
|---|---|---|---|---|---|---|---|---|---|
| | | | | ALL mode | 16B mode | | 8B mode | BG mode | |
| | | | | | BL16 | BL32 | BL32 | BL16 | BL32 |
| 533 | 2:1 | 10 | 133 | WL - 1 | WL + 5 | WL + 9 | WL + 9 | - | - |
| 1067 | 2:1 | 133 | 267 | WL - 2 | WL + 5 | WL + 9 | WL + 9 | - | - |
| 1600 | 2:1 | 267 | 400 | WL - 2 | WL + 5 | WL + 9 | WL + 9 | - | - |
| 2133 | 2:1 | 400 | 533 | WL - 3 | WL + 5 | WL + 9 | WL + 9 | - | - |
| 2750 | 2:1 | 533 | 688 | WL - 3 | WL + 5 | WL + 9 | WL + 9 | - | - |
| 3200 | 2:1 | 688 | 800 | WL - 4 | WL + 5 | WL + 9 | WL + 9 | - | - |
| | | | | | | | | | |
| 533 | 4:1 | 5 | 67 | WL - 1 | WL + 3 | WL + 5 | WL + 5 | - | - |
| 1067 | 4:1 | 67 | 133 | WL - 1 | WL + 3 | WL + 5 | WL + 5 | - | - |
| 1600 | 4:1 | 133 | 200 | WL - 1 | WL + 3 | WL + 5 | WL + 5 | - | - |
| 2133 | 4:1 | 200 | 267 | WL - 2 | WL + 3 | WL + 5 | WL + 5 | - | - |
| 2750 | 4:1 | 267 | 344 | WL - 2 | WL + 3 | WL + 5 | WL + 5 | - | - |
| 3200 | 4:1 | 344 | 400 | WL - 2 | WL + 3 | WL + 5 | WL + 5 | - | - |
| 3733 | 4:1 | 400 | 467 | WL - 2 | - | - | WL + 5 | WL + 3 | WL + 7 |
| 4267 | 4:1 | 467 | 533 | WL - 3 | - | - | WL + 5 | WL + 3 | WL + 7 |
| 4800 | 4:1 | 533 | 600 | WL - 3 | - | - | WL + 5 | WL + 3 | WL + 7 |
| 5500 | 4:1 | 600 | 688 | WL - 3 | - | - | WL + 5 | WL + 3 | WL + 7 |
| 6000 | 4:1 | 688 | 750 | WL - 3 | - | - | WL + 5 | WL + 3 | WL + 7 |
| 6400 | 4:1 | 750 | 800 | WL - 3 | - | - | WL + 5 | WL + 3 | WL + 7 |

NOTE 1 ODTLoff is not related to WCK post-amble because the ODT of WCK is always turned on or off.

**Table 262 - Asynchronous NT-ODT Turn on and Turn off Timing for Write**

| Parameter | ALL Operation Frequency | Unit |
|---|---|---|
| tODTon,min | 1.5 | ns |
| tODTon,max | 3.5 | ns |
| tODToff,min | 1.5 | ns |
| tODToff,max | 3.5 | ns |

#### 7.6.6.3.2 NT-ODT behavior for Read operation

LPDDR5 SDRAM only supports “Separate DQ NT-ODT timing from RDQS NT-ODT timing” at Read related command such as Read and MRR and this information is described MR0 OP[0]: NT-ODT timing mode.

MR0 OP[0]=$1_B$: Separate DQ NT-ODT timing from RDQS NT-ODT timing

ODTLoff_RD_DQ/RDQS is a synchronous parameter and it is the latency from the Read command(the rising edge of the clock) to tODT_RDoff reference. ODTLoff_RD_DQ/RDQS latency is a fixed latency value for each operation frequency range. Each operation frequency range has a different ODTLoff_RD_DQ/RDQS latency. Minimum RTT turn-off time (tODT_RDoff,min for example) is the point in time when the device termination circuit starts to turn off the NT-ODT resistance. Maximum NT-ODT turn-off time (tODT_RDoff,max) is the point in time when the on-die termination has reached high impedance. tODT_RDoff,min and tODT_RDoff,max are measured once ODTLoff latency is satisfied from the Read command.

ODTLoff_RD_DQ/RDQS is a synchronous parameter and it is the latency from the Read command (the rising edge of the clock) to tODT_RDon reference. ODTLoff_RD_DQ/RDQS latency is a fixed latency value for each operation frequency range. Each operation frequency range has a different ODTLoff_RD_DQ/RDQS latency. Minimum RTT turn-on time (tODT_RDon,min) is the point in time when the device termination circuit leaves high impedance state and NT-ODT resistance begins to turn on. Maximum RTT turn-on time (tODT_RDon,max) is the point in time when the ODT resistance is fully on. tODT_RDon,min and tODT_RDon,max are measured once ODTLoff_RD_DQ/RDQS latency is satisfied from the Read command.

In Non-target DRAM ODT enabled mode, ODT timings (ODTLoff_RD_DQ/RDQS and ODTLon_RD_DQ/RDQS) are referenced to Read command and the ODT value in target rank is disabled within tODT_RDoff,max as shown in **Figure 178**. After read operation, disabled ODT should be recovered to pre-defined Non-target DRAM ODT value within the tODT_RDon,max.

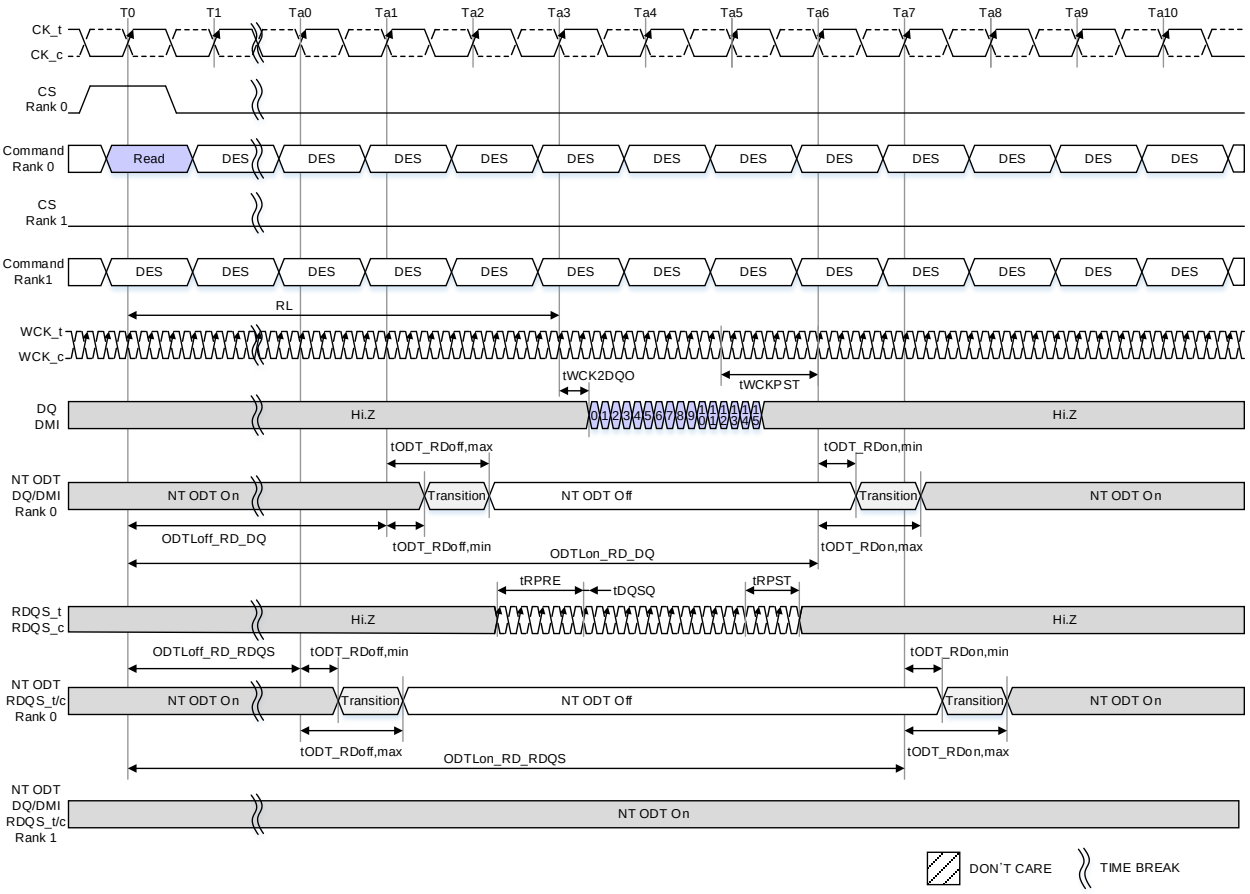


NOTE 1 tWCK2CK is 0ps in this instance.
NOTE 2 ODT/NT-ODT turned on/off timing for DQ and RDQS is separated.

**Figure 178 - ODT Control on Non-target DRAM for Read (MR0 OP[0]=$1_B$)**

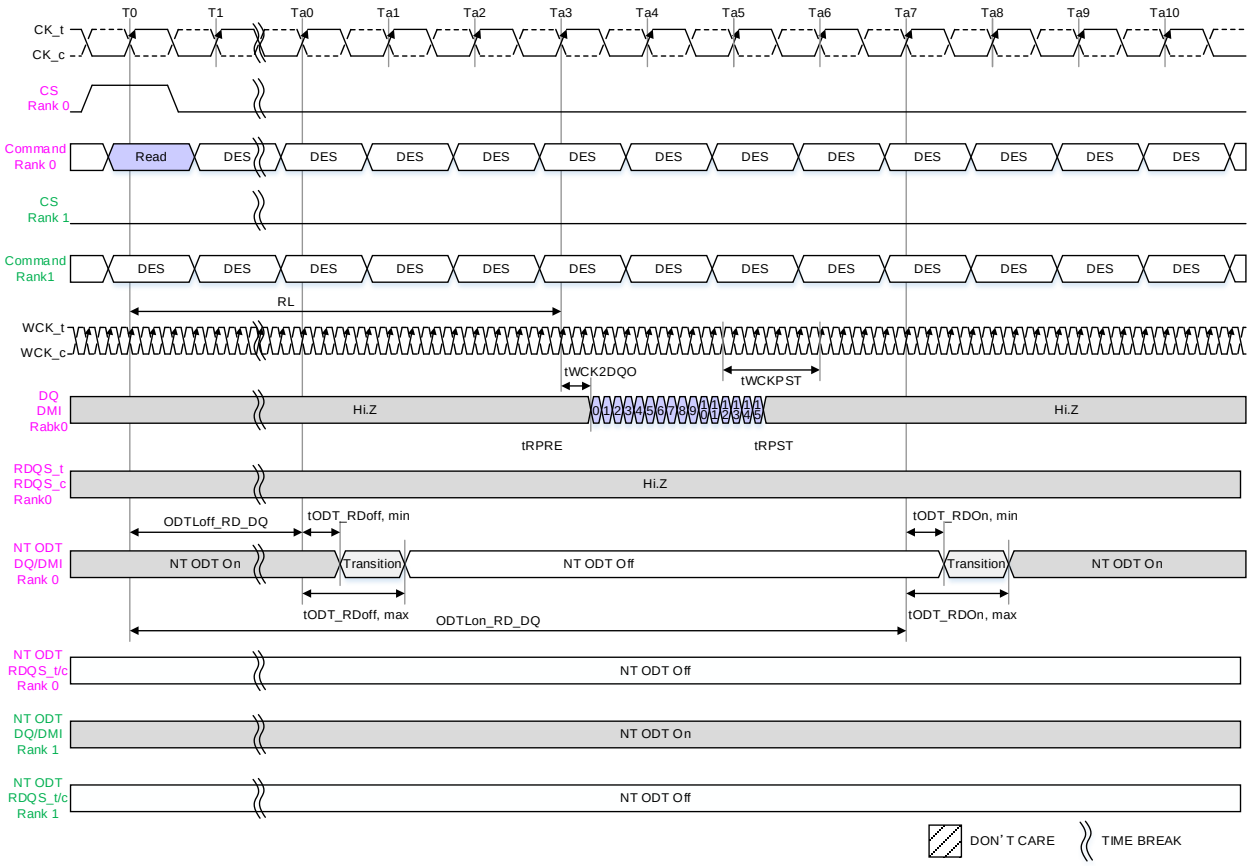


NOTE 1 tWCK2CK is 0ps in this instance.

**Figure 179 - ODT, NT ODT Timing for Read BG Mode: CKR (WCK vs. CK) = 4:1, BL=16 RDQS = Disabled, MR0 OP[0]=$1_B$**

**Table 263 - ODTLon_RD_DQ and ODTLoff_RD_DQ Latency Values for Read (MR0 OP[0]=$1_B$)**

| Data Rate | WCK:CK Ratio | Lower Clock Frequency Limit (>) (MHz) | Upper Clock Frequency Limit (≤) (MHz) | ODTLoff_RD_DQ Units=nCK | ODTLon_RD_DQ (RL + BL/n_min + RU(tWCK2DQO(max)/tCK)) Units=nCK | | | | |
|---|---|---|---|---|---|---|---|---|---|
| | | | | ALL mode | 16B mode | | 8B mode | BG mode | |
| | | | | | BL16 | BL32 | BL32 | BL16 | BL32 |
| 533 | 2:1 | 10 | 133 | RL - 1 | RL + 5 | RL + 9 | RL + 9 | - | - |
| 1067 | 2:1 | 133 | 267 | RL - 2 | RL + 5 | RL + 9 | RL + 9 | - | - |
| 1600 | 2:1 | 267 | 400 | RL - 2 | RL + 5 | RL + 9 | RL + 9 | - | - |
| 2133 | 2:1 | 400 | 533 | RL - 3 | RL + 6 | RL + 10 | RL + 10 | - | - |
| 2750 | 2:1 | 533 | 688 | RL - 3 | RL + 6 | RL + 10 | RL + 10 | - | - |
| 3200 | 2:1 | 688 | 800 | RL - 4 | RL + 6 | RL + 10 | RL + 10 | - | - |
| | | | | | | | | | |
| 533 | 4:1 | 5 | 67 | RL - 1 | RL + 3 | RL + 5 | RL + 5 | - | - |
| 1067 | 4:1 | 67 | 133 | RL - 1 | RL + 3 | RL + 5 | RL + 5 | - | - |
| 1600 | 4:1 | 133 | 200 | RL - 1 | RL + 3 | RL + 5 | RL + 5 | - | - |
| 2133 | 4:1 | 200 | 267 | RL - 2 | RL + 3 | RL + 5 | RL + 5 | - | - |
| 2750 | 4:1 | 267 | 344 | RL - 2 | RL + 3 | RL + 5 | RL + 5 | - | - |
| 3200 | 4:1 | 344 | 400 | RL - 2 | RL + 3 | RL + 5 | RL + 5 | - | - |
| 3733 | 4:1 | 400 | 467 | RL - 2 | - | - | RL + 5 | RL + 3 | RL + 7 |
| 4267 | 4:1 | 467 | 533 | RL - 3 | - | - | RL + 6 | RL + 4 | RL + 8 |
| 4800 | 4:1 | 533 | 600 | RL - 3 | - | - | RL + 6 | RL + 4 | RL + 8 |
| 5500 | 4:1 | 600 | 688 | RL - 3 | - | - | RL + 6 | RL + 4 | RL + 8 |
| 6000 | 4:1 | 688 | 750 | RL - 3 | - | - | RL + 6 | RL + 4 | RL + 8 |
| 6400 | 4:1 | 750 | 800 | RL - 3 | - | - | RL + 6 | RL + 4 | RL + 8 |

**Table 264 - ODTLon_RD_RDQS and ODTLoff_RD_RDQS Latency Values for Read with RDQS enabled & MR10 OP[5:4]=$00_B$, $01_B$, $10_B$ (MR0 OP[0]=$1_B$)**

| Data Rate | WCK:CK Ratio | Lower Clock Frequency Limit (>) (MHz) | Upper Clock Frequency Limit (≤) (MHz) | ODTLoff_RD_RDQS Units=nCK | ODTLon_RD_RDQS (RL + BL/n_min + RU(tWCK2DQO(max)/tCK) + 2) Units=nCK at CKR=2:1<br>ODTLon_RD_RDQS (RL + BL/n_min + RU(tWCK2DQO(max)/tCK) + 1) Units=nCK at CKR=4:1 | | | | |
|---|---|---|---|---|---|---|---|---|---|
| | | | | ALL mode | 16B mode | | 8B mode | BG mode | |
| | | | | | BL16 | BL32 | BL32 | BL16 | BL32 |
| 533 | 2:1 | 10 | 133 | RL - 3 | RL + 7 | RL + 11 | RL + 11 | - | - |
| 1067 | 2:1 | 133 | 267 | RL - 4 | RL + 7 | RL + 11 | RL + 11 | - | - |
| 1600 | 2:1 | 267 | 400 | RL - 4 | RL + 7 | RL + 11 | RL + 11 | - | - |
| 2133 | 2:1 | 400 | 533 | RL - 5 | RL + 8 | RL + 12 | RL + 12 | - | - |
| 2750 | 2:1 | 533 | 688 | RL - 5 | RL + 8 | RL + 12 | RL + 12 | - | - |
| 3200 | 2:1 | 688 | 800 | RL - 6 | RL + 8 | RL + 12 | RL + 12 | - | - |
| | | | | | | | | | |
| 533 | 4:1 | 5 | 67 | RL - 2 | RL + 4 | RL + 6 | RL + 6 | - | - |
| 1067 | 4:1 | 67 | 133 | RL - 2 | RL + 4 | RL + 6 | RL + 6 | - | - |
| 1600 | 4:1 | 133 | 200 | RL - 2 | RL + 4 | RL + 6 | RL + 6 | - | - |
| 2133 | 4:1 | 200 | 267 | RL - 3 | RL + 4 | RL + 6 | RL + 6 | - | - |
| 2750 | 4:1 | 267 | 344 | RL - 3 | RL + 4 | RL + 6 | RL + 6 | - | - |
| 3200 | 4:1 | 344 | 400 | RL - 3 | RL + 4 | RL + 6 | RL + 6 | - | - |
| 3733 | 4:1 | 400 | 467 | RL - 3 | - | - | RL + 6 | RL + 4 | RL + 8 |
| 4267 | 4:1 | 467 | 533 | RL - 4 | - | - | RL + 7 | RL + 5 | RL + 9 |
| 4800 | 4:1 | 533 | 600 | RL - 4 | - | - | RL + 7 | RL + 5 | RL + 9 |
| 5500 | 4:1 | 600 | 688 | RL - 4 | - | - | RL + 7 | RL + 5 | RL + 9 |
| 6000 | 4:1 | 688 | 750 | RL - 4 | - | - | RL + 7 | RL + 5 | RL + 9 |
| 6400 | 4:1 | 750 | 800 | RL - 4 | - | - | RL + 7 | RL + 5 | RL + 9 |

**Table 265 - ODTLon_RD_RDQS and ODTLoff_RD_RDQS Latency Values for Read with RDQS enabled & MR10 OP[5:4]=$11_B$ (MR0 OP[0]=$1_B$)**

| Data Rate | WCK:CK Ratio | Lower Clock Frequency Limit (>) (MHz) | Upper Clock Frequency Limit (≤) (MHz) | ODTLoff_RD_RDQS Units=nCK | ODTLon_RD_RDQS (RL + BL/n_min + RU(tWCK2DQO(max)/tCK) + 1) Units=nCK, at CKR=4:1 | | | | |
|---|---|---|---|---|---|---|---|---|---|
| | | | | ALL mode | 16B mode | | 8B mode | BG mode | |
| | | | | | BL16 | BL32 | BL32 | BL16 | BL32 |
| 3733 | 4:1 | 400 | 467 | RL - 4 | - | - | RL + 6 | RL + 4 | RL + 8 |
| 4267 | 4:1 | 467 | 533 | RL - 5 | - | - | RL + 7 | RL + 5 | RL + 9 |
| 4800 | 4:1 | 533 | 600 | RL - 5 | - | - | RL + 7 | RL + 5 | RL + 9 |
| 5500 | 4:1 | 600 | 688 | RL - 5 | - | - | RL + 7 | RL + 5 | RL + 9 |
| 6000 | 4:1 | 688 | 750 | RL - 5 | - | - | RL + 7 | RL + 5 | RL + 9 |
| 6400 | 4:1 | 750 | 800 | RL - 5 | - | - | RL + 7 | RL + 5 | RL + 9 |

**Table 266 - Asynchronous NT-ODT Turn On and Turn Off Timing**

| Parameter | ALL Operation Frequency | Unit |
|---|---|---|
| tODT_RDon,min | 1.5 | ns |
| tODT_RDon,max | 3.5 | ns |
| tODT_RDoff,min | 1.5 | ns |
| tODT_RDoff,max | 3.5 | ns |

#### 7.6.6.3.3 Timing diagrams for typical case

Timing diagrams for typical case are shown in below.

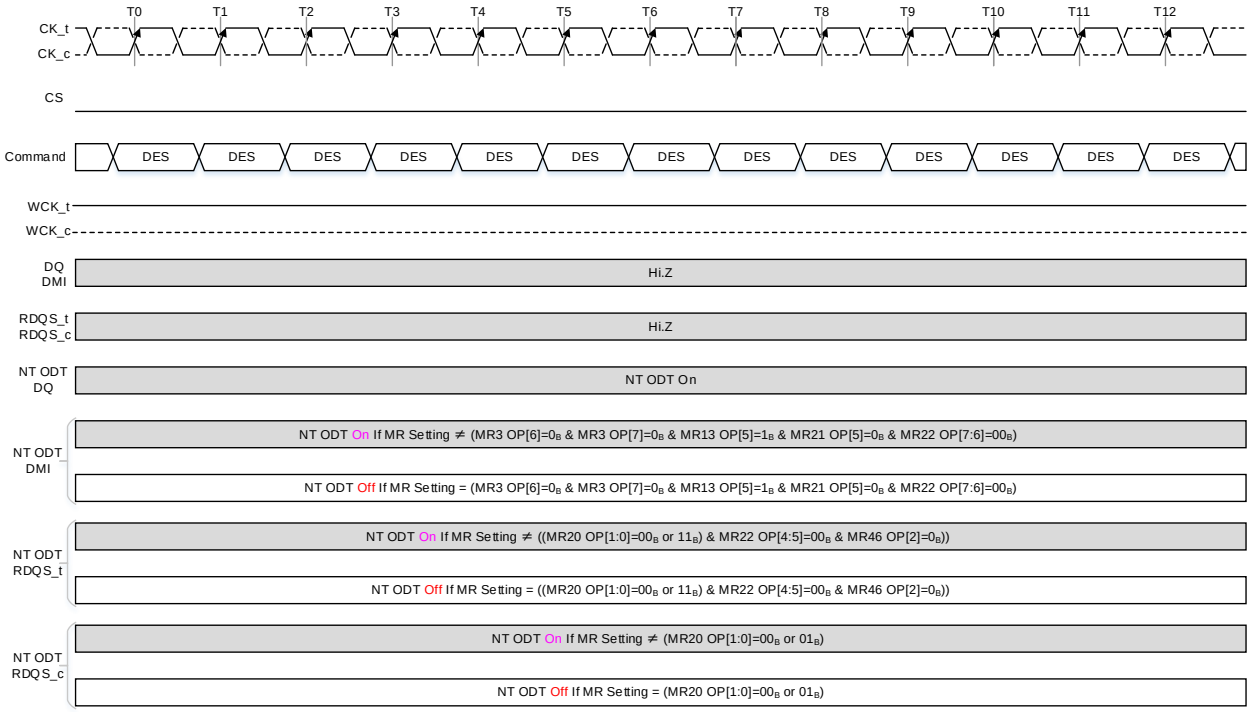


**Figure 180 - NT ODT State at Idle**

NT-ODT behavior in Write X operation is shown in below.

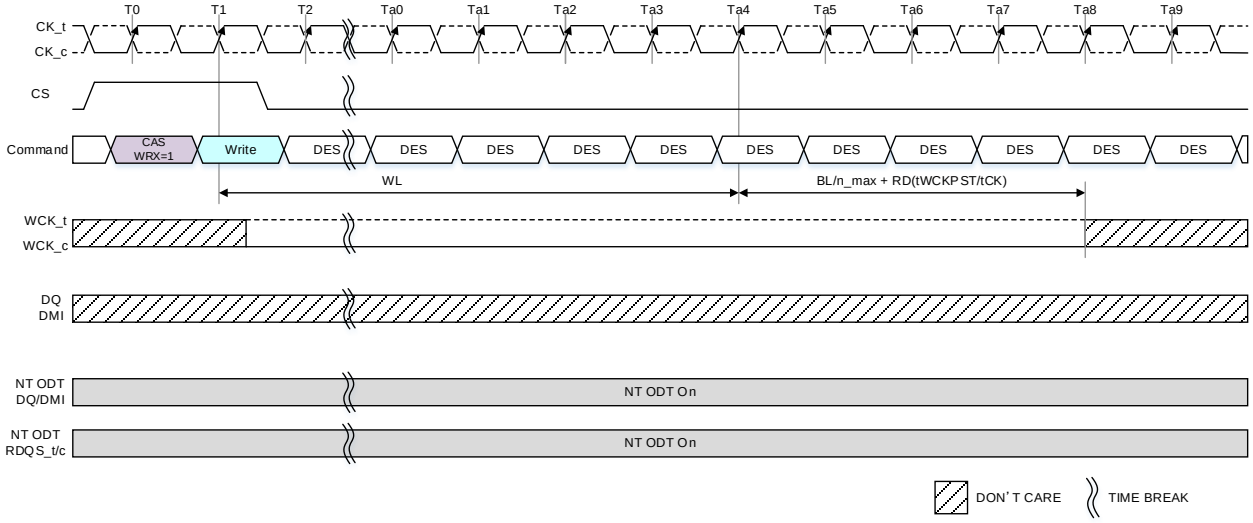


NOTE 1 NT ODT is Enabled.

**Figure 181 - NT ODT Timing at Write X for Write BG Mode: CKR (WCK vs. CK) = 4:1, BL=16**

NT-ODT behavior in Write with Link ECC operation is shown in below.

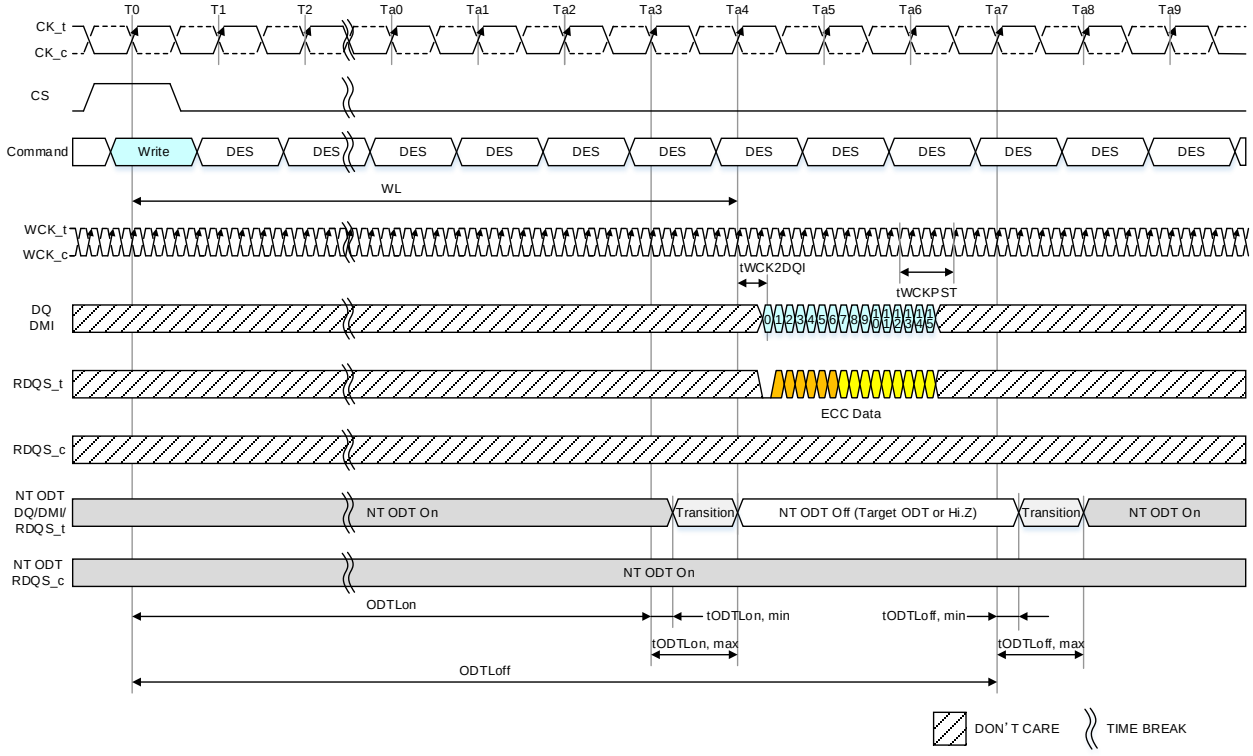


NOTE 1 tWCK2CK is 0ps in this instance.
NOTE 2 ODTLon=WL-1, ODTLoff=WL+3
NOTE 3 In case of NT-ODT is applied for DMI.
NOTE 4 Write Link ECC is enabled.

**Figure 182 - ODT, NT ODT Timing for Write w/ Link ECC BG Mode: CKR (WCK vs. CK) = 4:1, BL=16**

NT-ODT behavior in Write with Write X and Link ECC operation is shown in below.

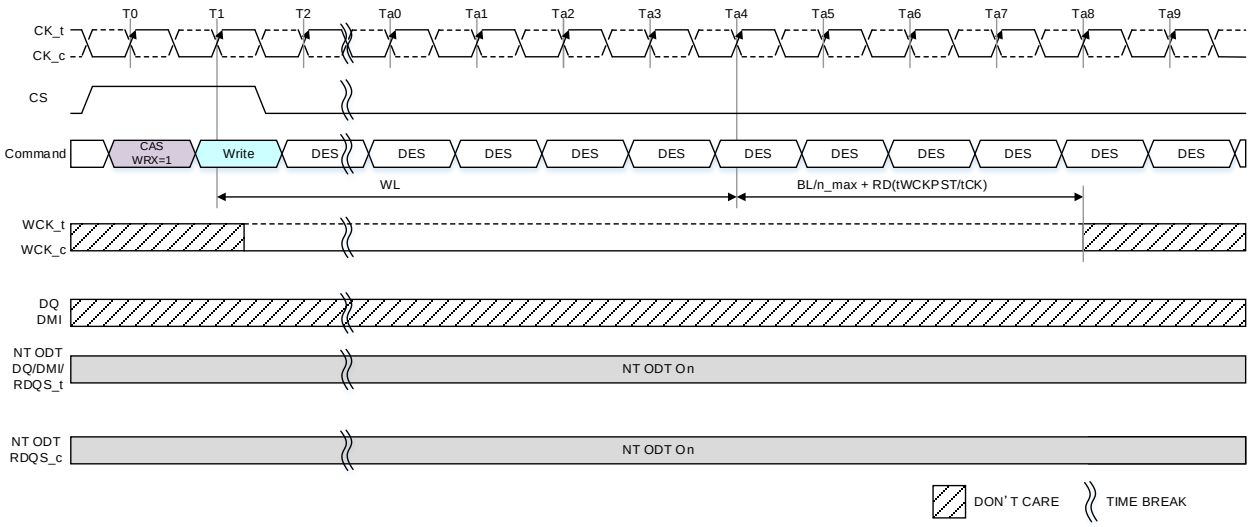


**Figure 183 - NT ODT Timing at Write X with Write Link ECC for Write BG Mode: CKR (WCK vs. CK) = 4:1, BL=16**

### 7.6.6.3.4 Rank to Rank Write to Read timing

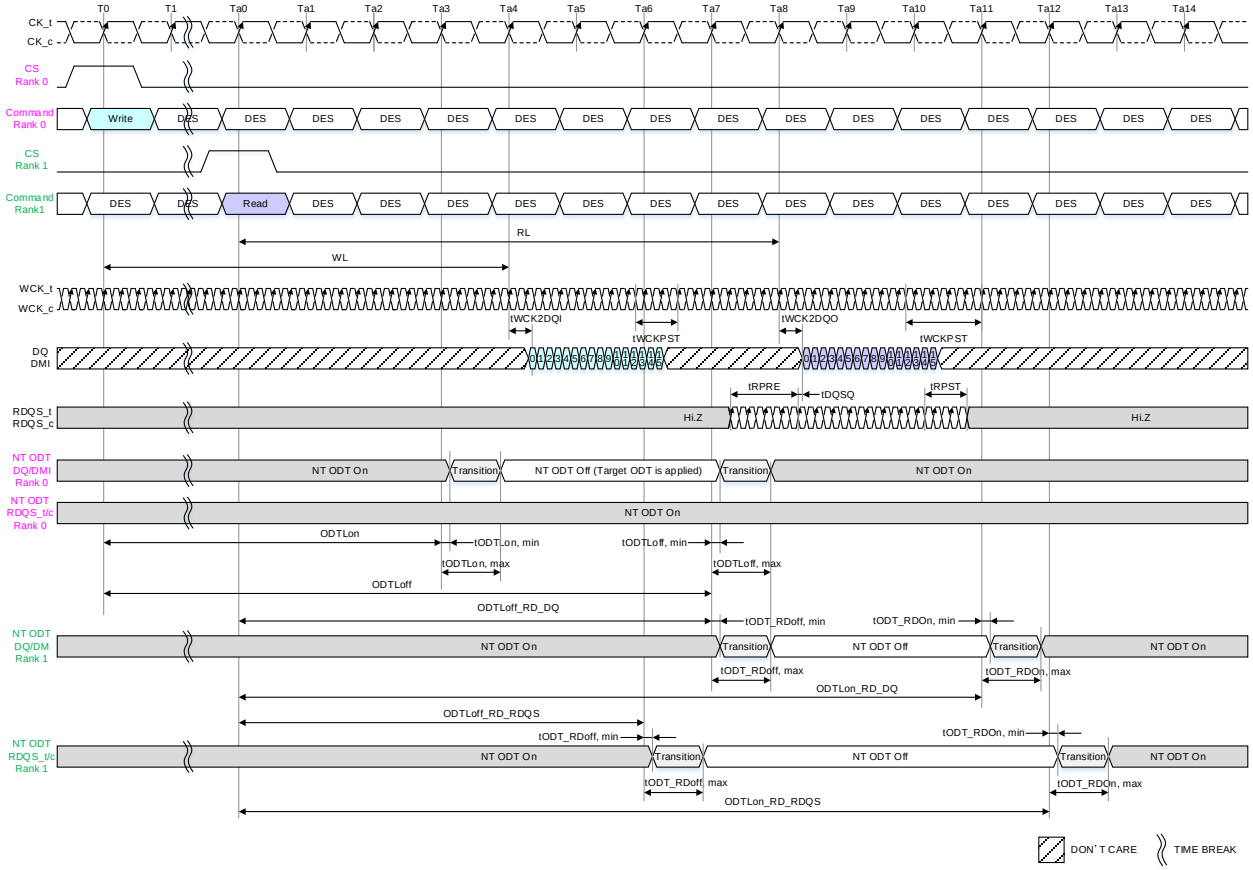


NOTE 1 tWCK2CK is 0ps in this instance.
NOTE 2 ODTLon=WL-1, ODTLoff=WL+3
NOTE 3 In case of NT-ODT is applied for DMI.
NOTE 4 Write Link ECC is disabled.
NOTE 5 ODTLoff_RD_DQ=RL-1, ODTLon_RD_DQ=RL+3
NOTE 6 ODTLoff_RD_RDQS=RL-2, ODTLon_RD_RDQS=RL+4
NOTE 7 ODT/NT-ODT turned on/off timing for DQ and RDQS is separated.

**Figure 184 - Write to Read Rank2Rank Operation (MR0 OP[0]=$1_B$)**

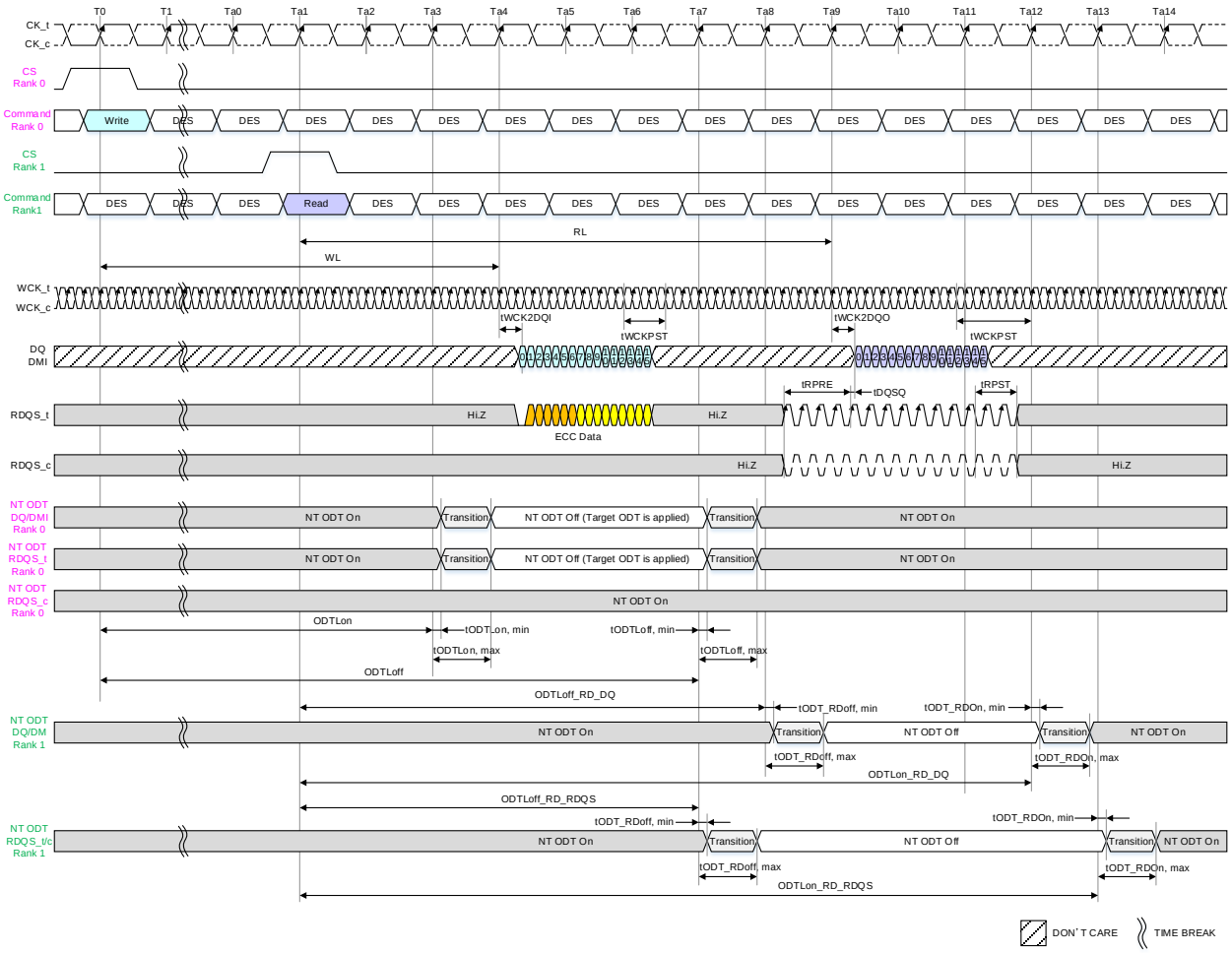


NOTE 1 tWCK2CK is 0ps in this instance.
NOTE 2 ODTLon=WL-1, ODTLoff=WL+3
NOTE 3 In case of NT-ODT is applied for DMI.
NOTE 4 Write Link ECC is enabled.
NOTE 5 ODTLoff_RD_DQ=RL-1, ODTLon_RD_DQ=RL+3
NOTE 6 ODTLoff_RD_RDQS=RL-2, ODTLon_RD_RDQS=RL+4
NOTE 7 ODT/NT-ODT turned on/off timing for DQ and RDQS is separated.

**Figure 185 - Write to Read Rank2Rank Operation w/ Link ECC (MR0 OP[0]=$1_B$)**

### 7.6.7 Input Clock Stop and Frequency Change

LPDDR5 SDRAM supports input clock frequency change under the following conditions:

- tCK(abs)min is met for each clock cycle.
- Refresh requirements apply during clock frequency change.
- All banks are required to be idle state or during tRFCab/pb.
- Any Mode Register Write, or Mode Register Read commands must have executed to completion, including any associated data bursts prior to changing the frequency;
- The certain timing conditions such as tRCD, tWR, tWRA, tMRW, tMRR have been met prior to changing the frequency.
- CS shall be held LOW during clock frequency change.
- The LPDDR5 SDRAM is ready for normal operation after the clock satisfies tCH(abs) and tCL(abs) for a minimum of (2 x tCK + tXP).
- WCK2CK-Sync state is expired, or WCK2CK-Sync OFF state in case of WCK always On mode.

After the input clock frequency is changed, additional MRW commands may be required to set the WR, RL, etc. These settings may need to be adjusted to meet minimum timing requirements at the target clock frequency.

LPDDR5 SDRAM supports clock stop under the following conditions:

- CK_t is held LOW and CK_c is held HIGH during clock stop.
- CS shall be held LOW during clock stop.
- Refresh requirements apply during clock stop.
- All banks are required to be idle state or during tRFCab/pb or Active Power-Down.
- The certain timing conditions such as tRCD, tWR, tRP, tMRW, tMRR, tZQLAT, etc. have been met prior to stopping the clock.
- Read with auto precharge and write with auto precharge commands need extra 4 clock cycles in addition to the related timing constraints, nWR and nRTP, to complete the operations as sown in Figure 186, Figure 187, and Figure 188.
- REFab, REFpb, SRE, SRX and ZQcal Start commands are required to have Max(9ns,6nCK) additional clocks prior to stopping the clock as shown in Figure 189.
- The LPDDR5 SDRAM is ready for normal operation after the clock is restarted and satisfies tCH(abs) and tCL(abs) for a minimum of (2 x tCK + tXP).
- WCK2CK-Sync state is expired, or WCK2CK-Sync OFF state in case of WCK always On mode.

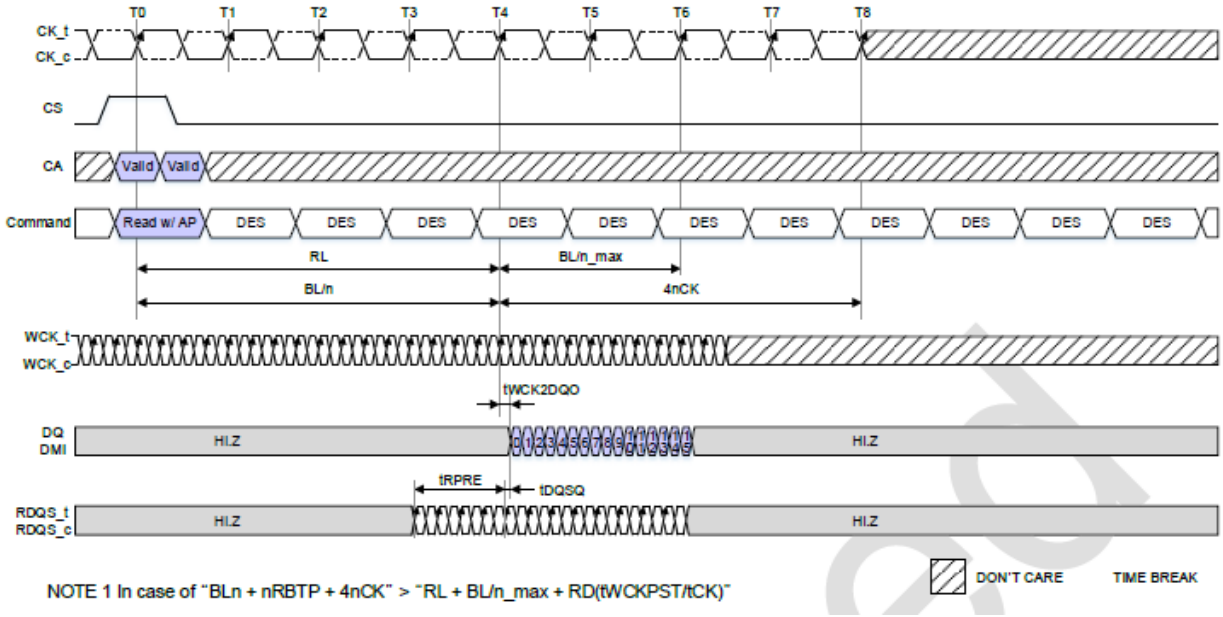


**Figure 186 – Delay time from Read with Auto-Precharge to Clock Stop: 16B mode, CKR=4:1, tRPST=0.5nWCK, tWCKPST=2.5nWCK, nRBTP=0nCK**

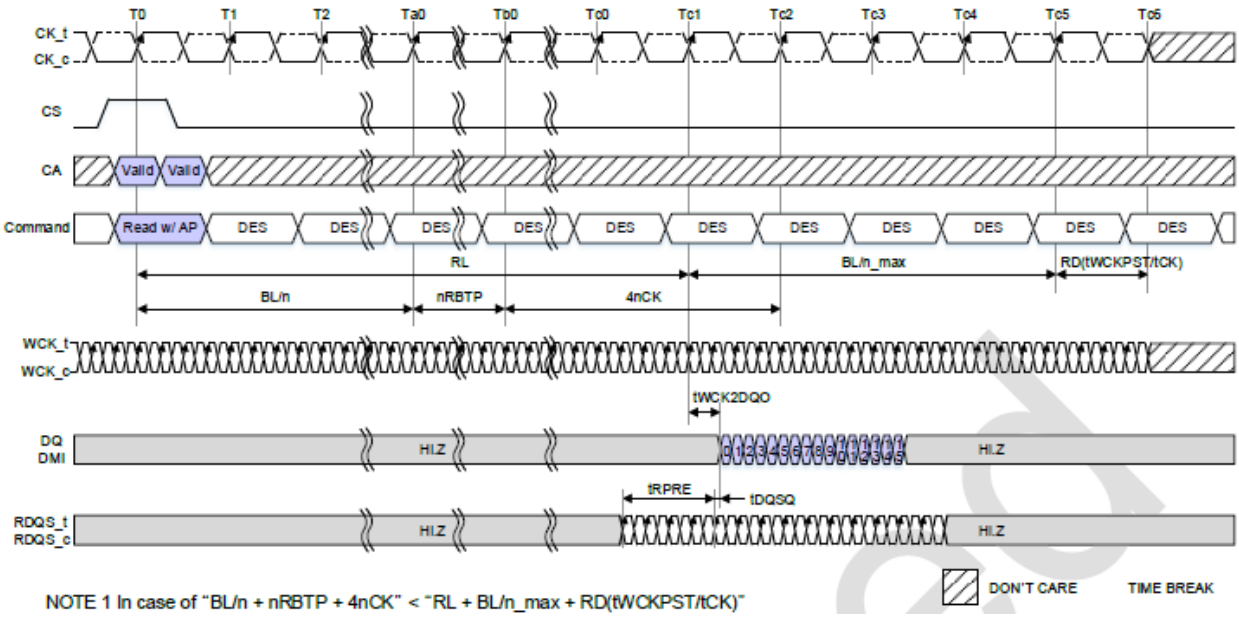


**Figure 187 – Delay time from Read with Auto-Precharge to Clock Stop: BG mode, CKR=4:1, tRPST=2.5nWCK, tWCKPST=4.5nWCK**

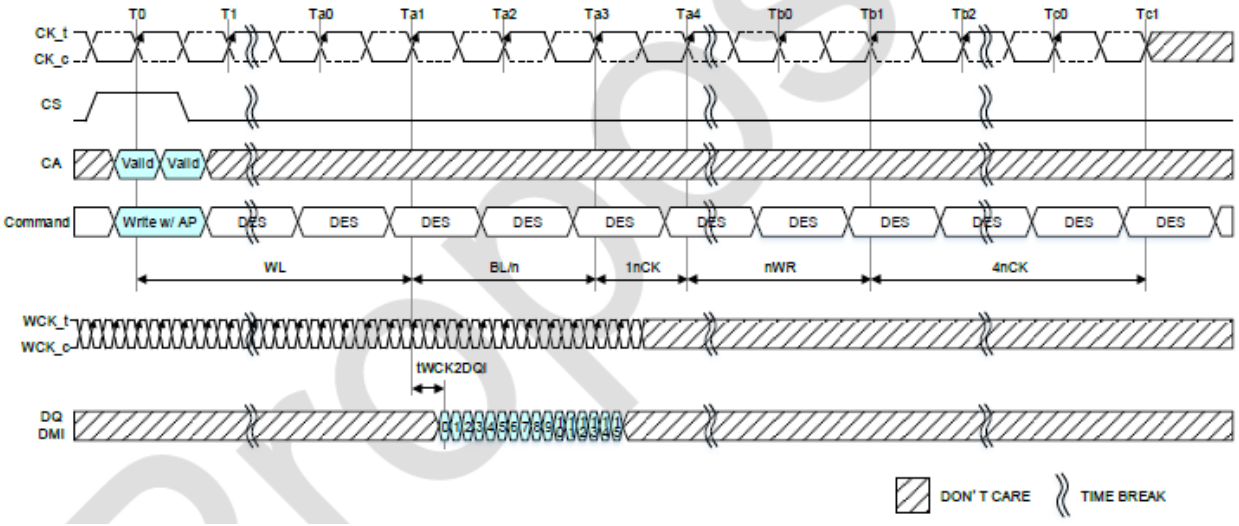


**Figure 188 – Delay time from Write with Auto-Precharge to Clock Stop: 16B mode, CKR=4:1, tWCKPST=2.5nWCK**

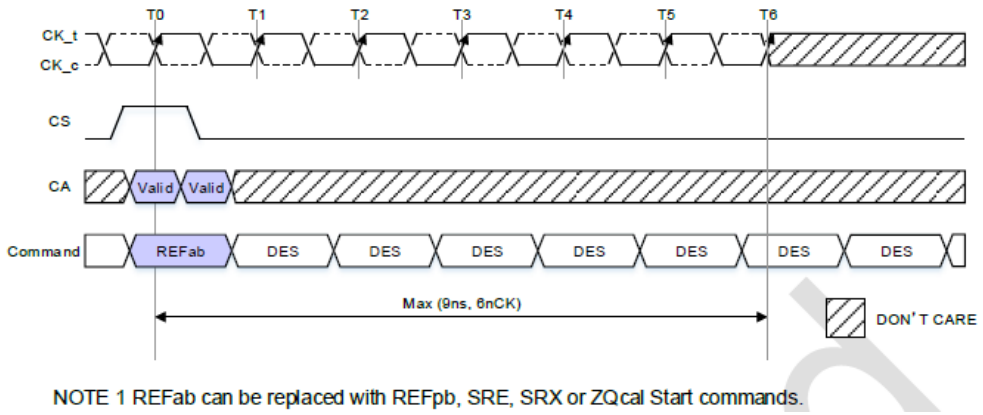


**Figure 189 – Delay time from REFab, REFpb, SRE, SRX and ZQ Cal Start to Clock Stop**

### 7.6.7.1 WCK to CK Frequency Ratio (CKR) Change

LPDDR5 SDRAM supports two WCK to CK frequency ratio (CKR), one is 2 to 1 and the other is 4 to 1. CKR mode is selected by MR18 OP[7] (MR18 OP[7] = $0_B$ : CKR=2:1, MR18 OP[7] =$1_B$ : CKR=4:1). CKR can be changed by Frequency Set Point Function (FSP) or MRW command to set MR18 OP[7] setting. Refer to “7.6.7 Input Clock Stop and Frequency Change” for CKR change by FSP.

#### 7.6.7.1.1 WCK to CK Frequency Ratio (CKR) Change by MRW command

CKR mode can be changed by MRW command to update MR18 OP[7] setting. Prior to CKR mode change by MRW command, LPDDR5 SDRAM should be in all bank idle state and WCK2CK-Sync expired or WCK2CK-Sync OFF state in case WCK always On mode. Refer to “MRR/MRW Timing Constraints” table for its command timing constraints.

After the CKR mode is changed, additional MRW commands may be required to set the WR, RL, etc. These settings may need to be adjusted to meet timing requirements at the operating clock frequency and WCK to CK frequency ratio

### 7.6.8 $V_{REF}$ Current Generator (VRCG)

LPDDR5 SDRAM VREF current generators (VRCG) incorporate a high current mode to reduce the settling time of the internal $V_{REF}$(DQ) and $V_{REF}$(CA) levels during training and when changing frequency set points during operation. The high current mode is enabled by setting MR16 OP[6] = 1. Only Deselect commands may be issued until tVRCG_ENABLE is satisfied. tVRCG_ENABLE timing is shown in Figure 190.

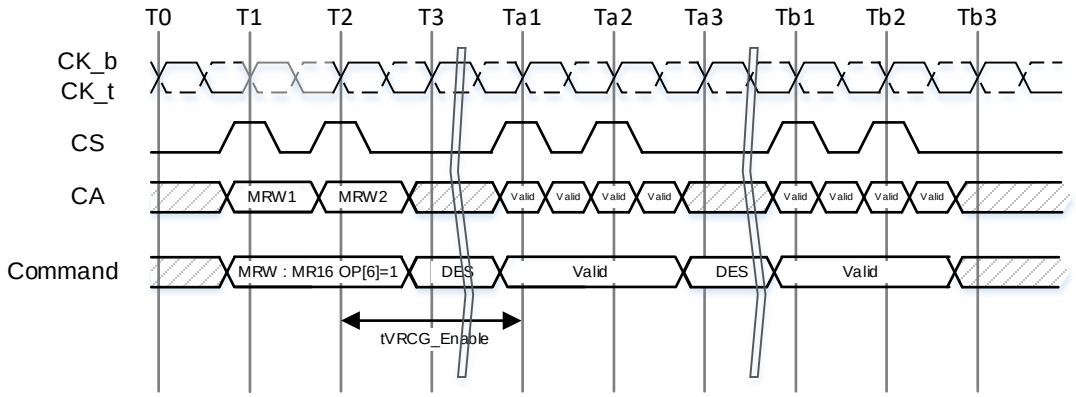


**Figure 190 — VRCG Enable Timing**

VRCG high current mode is disabled by setting MR16 OP[6] = 0. Only Deselect commands may be issued until tVRCG_DISABLE is satisfied. tVRCG_DISABLE timing is shown in Figure 191.

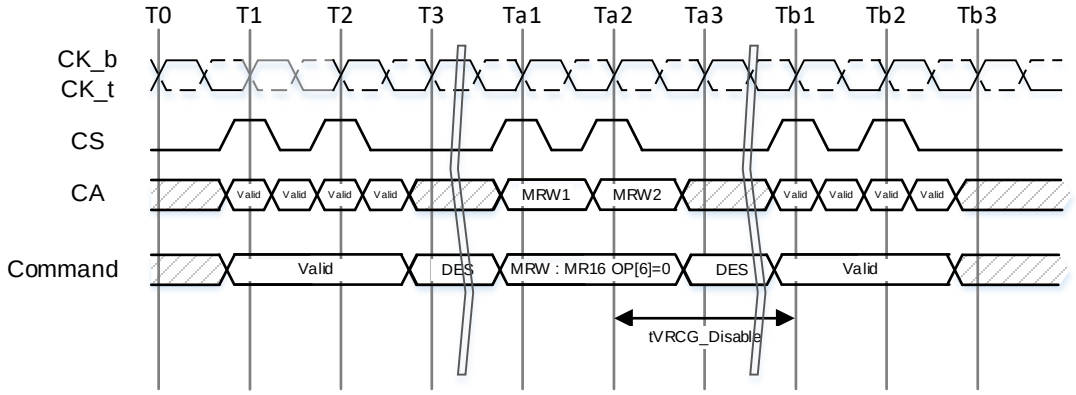


**Figure 191 — VRCG Disable Timing**

Note that LPDDR5 SDRAM devices support $V_{REF}$(CA) and $V_{REF}$(DQ) range and value changes without enabling VRCG high current mode.

**Table 267 — VRCG Enable / Disable Timing**

| Parameter | Symbol | Min | Max | Unit | Note |
|---|---|---|---|---|---|
| $V_{REF}$ High Current Mode Enable Time | tVRCG_ENABLE | | 150 | ns | |
| $V_{REF}$ High Current Mode Disable Time | tVRCG_DISABLE | | 100 | ns | |

### 7.6.9 VREF(CA) update timing

In case of VRCG is high current mode: MR16 OP[6]=$1_B$, LPDDR5 $V_{REF}$(CA) setting time which update by MRW command is shown in **Figure 192**.

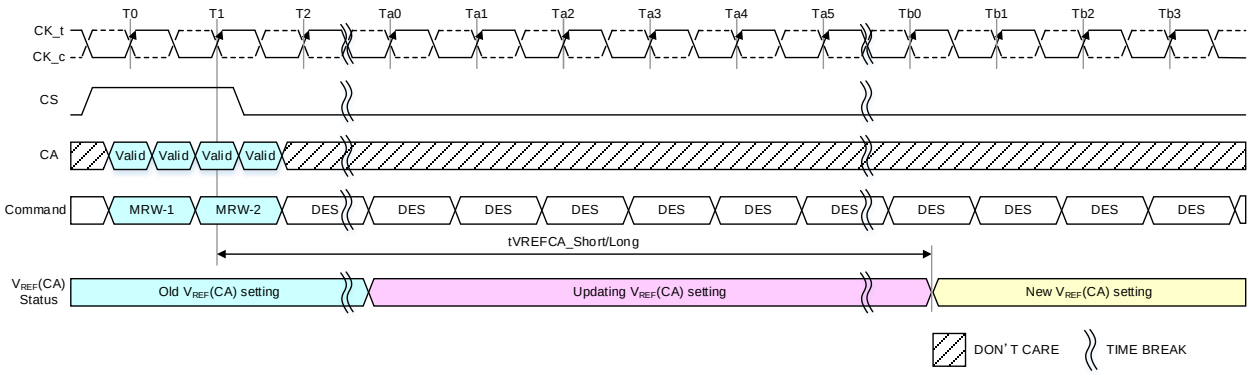


NOTE 1 VRCG (VREF Current Generator): MR16 OP[6]=$1_B$.
NOTE 2 Only DES Command is allowed till tVREFCA_Short/Long is satisfied.

**Figure 192 - $V_{REF}$(CA) update timing: VRCG is High Current Mode**

In case of VRCG is Normal operation: MR16 OP[6]=$0_B$, LPDDR5 VREF(CA) setting time which update by MRW command is shown in **Figure 193**.

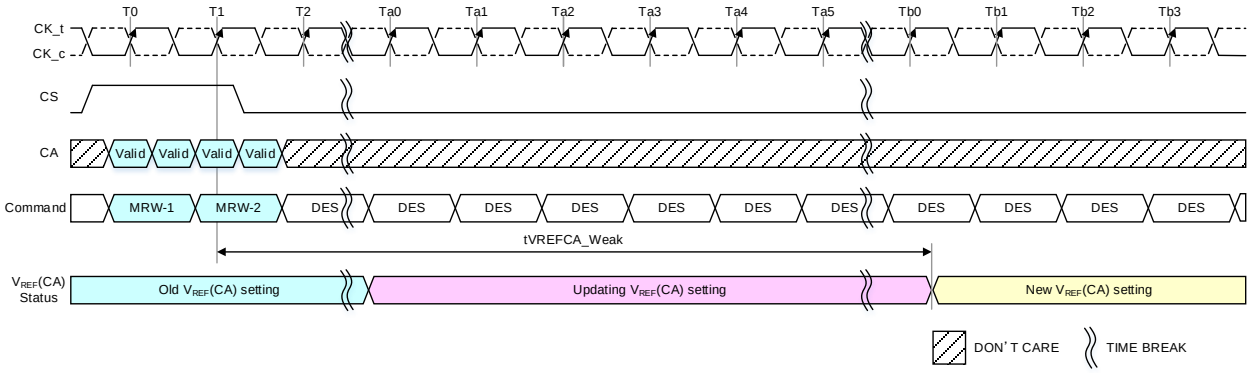


NOTE 1 VRCG (VREF Current Generator): MR16 OP[6]=$0_B$.
NOTE 2 Only DES Command is allowed till tVREFCA_Weak is satisfied.

**Figure 193 - $V_{REF}$(CA) update timing: VRCG is Normal Operation**

**Table 268 - $V_{REF}$(CA) update timing AC Timing Table**

| Item | Symbol | Min/ Max | CK Frequency (MHz) | | | | | | | | | | | | Unit | Notes |
|---|---|---|---|---|---|---|---|---|---|---|---|---|---|---|---|---|
| | | | 67 | 133 | 200 | 267 | 344 | 400 | 467 | 533 | 600 | 688 | 750 | 800 | | |
| VREF(CA) update parameters | | | | | | | | | | | | | | | | |
| $V_{REF}$(CA) update timing | tVREFCA_Short | Min | 200+0.5tCK | | | | | | | | | | | | ns | 1,2,3 |
| | tVREFCA_Long | Min | 250+0.5tCK | | | | | | | | | | | | ns | 1,2,4 |
| | tVREFCA_Weak | Min | 1 | | | | | | | | | | | | ms | 6 |

NOTE 1 $V_{REF}$(CA) update timing depends on value of $V_{REF}$(CA) setting: MR12 OP[6:0].
NOTE 2 The value is assumed that VRCG is setting High current mode: MR16 OP[6]=$1_B$.
NOTE 3 tCK for this timing is the tCK value of the operating frequency when the MRW is issued.
NOTE 4 VREFCA_Short is for a single step size increment/decrement change in $V_{REF}$(CA) voltage.
NOTE 5 VREFCA_Long is for at least 2 step sizes increment/decrement change including up to $V_{REF}$min to $V_{REF}$max or $V_{REF}$max to $V_{REF}$min change in $V_{REF}$(CA) voltage.
NOTE 6 The value is assumed that VRCG is setting Normal Operation: MR16 OP[6]=$0_B$.

### 7.6.10 VREF(DQ) update timing

In case of VRCG is high current mode: MR16 OP[6]=$1_B$, LPDDR5 $V_{REF}$(DQ) setting time which update by MRW command is shown in **Figure 192**.

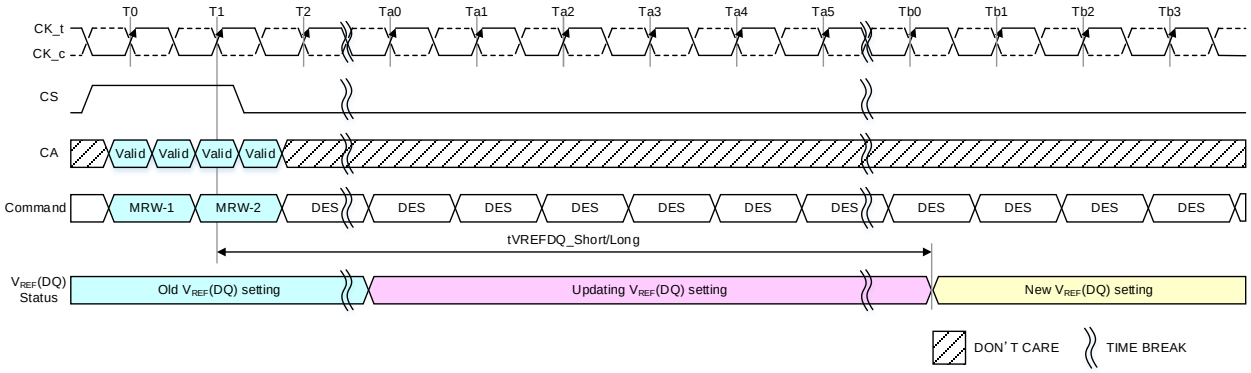


NOTE 1 VRCG (VREF Current Generator): MR16 OP[6]=$1_B$.
NOTE 2 DES commands are shown for ease of illustration; other commands may be valid at these times.
NOTE 3 The WCK and Data input is prohibited till the tVREFDQ_Short/Long period is satisfied.

**Figure 194 - $V_{REF}$(DQ) update timing: VRCG is High Current Mode**

In case of VRCG is Normal operation: MR16 OP[6]=$0_B$, LPDDR5 VREF(DQ) setting time which update by MRW command is shown in **Figure 195**.

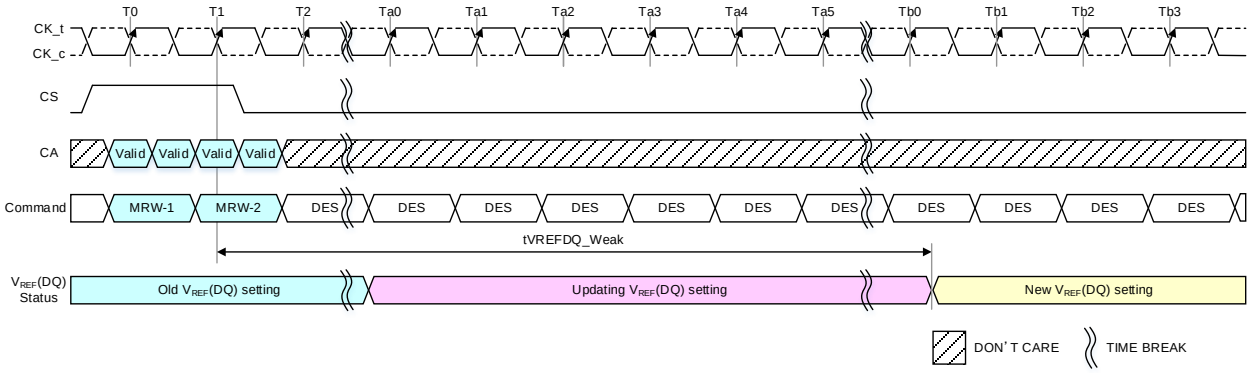


NOTE 1 VRCG (VREF Current Generator): MR16 OP[6]=$0_B$.
NOTE 2 DES commands are shown for ease of illustration; other commands may be valid at these times.
NOTE 3 The WCK and Data input is prohibited till the tVREFDQ_Weak period is satisfied.

**Figure 195 - $V_{REF}$(DQ) update timing: VRCG is Normal Operation**

**Table 269 - $V_{REF}$(DQ) update timing AC Timing Table**

| Item | Symbol | Min/ Max | Data Rate (Mbps) | | | | | | | | | | | | Unit | Notes |
|---|---|---|---|---|---|---|---|---|---|---|---|---|---|---|---|---|
| | | | 533 | 1067 | 1600 | 2133 | 2750 | 3200 | 3733 | 4267 | 4800 | 5500 | 6000 | 6400 | | |
| $V_{REF}$(DQ) update parameters | | | | | | | | | | | | | | | | |
| $V_{REF}$(DQ) update timing | tVREFDQ_Short | Min | 200+0.5tCK | | | | | | | | | | | | ns | 1,2,3 |
| | tVREFDQ_Long | Min | 250+0.5tCK | | | | | | | | | | | | ns | 1,2,4 |
| | tVREFDQ_Weak | Min | 1 | | | | | | | | | | | | ms | 6 |

NOTE 1 $V_{REF}$(DQ) update timing depends on value of $V_{REF}$(DQ) setting: MR14 OP[6:0] and MR15 OP[6:0].

NOTE 2 The value is assumed that VRCG is setting High current mode: MR16 OP[6]=$1_B$.

NOTE 3 tCK for this timing is the tCK value of the operating frequency when the MRW is issued.

NOTE 4 VREFDQ_Short is for a single step size increment/decrement change in $V_{REF}$(DQ) voltage.

NOTE 5 VREFDQ_Long is for at least 2 step sizes increment/decrement change including up to $V_{REF}$min to $V_{REF}$max or $V_{REF}$max to $V_{REF}$min change in $V_{REF}$(DQ) voltage.

NOTE 6 The value is assumed that VRCG is setting Normal Operation: MR16 OP[6]=$0_B$.

### 7.6.11 Thermal Offset

Because of their tight thermal coupling with the LPDDR5 device, hot spots on an SOC can induce thermal gradients across the LPDDR5 device. As these hot spots may not be located near the device thermal sensor, the devices' temperature compensated self-refresh circuit may not generate enough refresh cycles to guarantee memory retention. To address this shortcoming, the controller can provide a thermal offset that the memory uses to adjust its TCSR circuit to ensure reliable operation.

This offset is provided through MR13 OP[1:0]. This temperature offset may modify refresh behavior. It will take a max of 200us to have the change reflected in MR4 OP[4:0]. If the induced thermal gradient from the device temperature sensor location to the hot spot location of the controller is larger than 15 degrees C, then self-refresh mode will not reliably maintain memory contents.

To accurately determine the temperature gradient between the memory thermal sensor and the induced hot spot, the memory thermal sensor location must be provided to the LPDDR5 memory controller.

### 7.6.12 Temperature Sensor

LPDDR5 devices feature a temperature sensor whose status can be read from MR4. This sensor can be used to determine an appropriate refresh rate, determine whether AC timing de-rating is required in the elevated temperature range, and/or monitor the operating temperature. Either the temperature sensor or the device TOPER may be used to determine whether operating temperature requirements are being met.

LPDDR5 devices shall monitor device temperature and update MR4 according to tTSI. Device temperature status bits shall be no older than tTSI. MR4 will be updated even when device is in self refresh state.

When using the temperature sensor, the actual device case temperature may be higher than the TOPER specification that applies for the standard or elevated temperature ranges. For example, TCASE may be above 85°C when MR4[4:0] equals 'b01001. LPDDR5 devices shall allow for 2°C temperature margin between the point at which the device updates the MR4 value and the point at which the controller reconfigures the system accordingly. In the case of tight thermal coupling of the memory device to external hot spots, the maximum device temperature might be higher than what is indicated by MR4

To assure proper operation using the temperature sensor, applications should consider the following factors:

- TempGradient is the maximum temperature gradient experienced by the memory device at the temperature of interest over a range of 2 °C.
- ReadInterval is the time period between MR4 reads from the system.
- TempSensorInterval (tTSI) is maximum delay between internal updates of MR4.
- SysRespDelay is the maximum time between a read of MR4 and the response by the system.

### 7.6.9 Temperature Sensor (Cont'd)

In order to determine the required frequency of polling MR4, the system shall use the maximum TempGradient and the maximum response time of the system using the following equation:

**TempGradient x (ReadInterval + tTSI + SysRespDelay) ≤ 2°C**

**Table 270 — Temperature Sensor**

| Parameter | Symbol | Max/ Min | Value | Unit | Note |
|---|---|---|---|---|---|
| System Temperature Gradient | TempGradient | Max | System Dependent | °C/s | |
| MR4 Read Interval | ReadInterval | Max | System Dependent | ms | |
| Temperature Sensor Interval | tTSI | Max | 32 | ms | |
| System Response Delay | SysRespDelay | Max | System Dependent | ms | |
| Device Temperature Margin | TempMargin | Max | 2 | °C | |

For example, if TempGradient is 10°C/s and the SysRespDelay is 1 ms: (10°C/s) x (ReadInterval + 32ms + 1ms) ≤ 2°C.

In this case, ReadInterval shall be no greater than 167 ms.

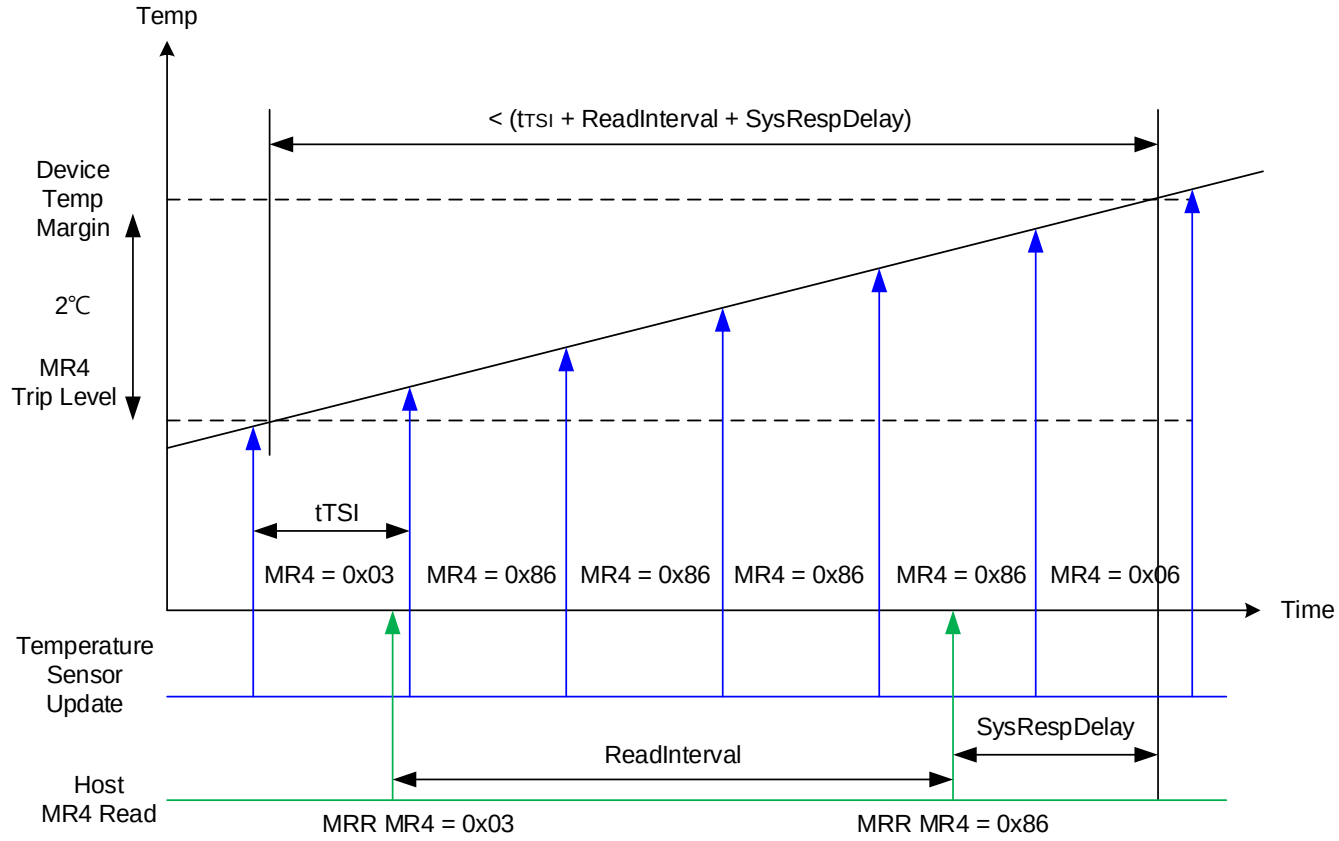


**Figure 196 — Temp Sensor Timing**

### 7.6.13 Multi-Purpose Command (MPC)

LPDDR5 SDRAM uses the MPC command to issue commands about ZQ calibration and WCK2DQx Interval Oscillator. The MPC command is initiated with CS, and CA[6:0] asserted to the proper state at the crossing points of CK_t and CK_c, as defined by the Command Truth Table, **Table 178**. The MPC command has eight operands (OP[7:0]) that are decoded to execute specific commands in the SDRAM. OP[7] is a special bit that is decoded on the first crossing point of CK_t and CK_c of the MPC command.

The MPC command supports the following functions:

- Start WCK2DQI Interval Oscillator
- Stop WCK2DQI Interval Oscillator
- Start WCK2DQO Interval Oscillator
- Stop WCK2DQO Interval Oscillator
- ZQ CAL Start
- ZQ CAL Latch

**Table 271 — MPC Command Definition**

| SDRAM COMMAND | DDR COMMAND PINS | | | | | | | | CK_t edge | Notes |
|---|---|---|---|---|---|---|---|---|---|---|
| | CS | CA0 | CA1 | CA2 | CA3 | CA4 | CA5 | CA6 | | |
| MULTI PURPOSE COMMAND (MPC) | H | L | L | L | L | H | H | OP7 | ↑ R1 | |
| | X | OP0 | OP1 | OP2 | OP3 | OP4 | OP5 | OP6 | ↓ F1 | |

**Table 272 — MPC Command Definition for OP[7:0]**

| Function | Operand | Data | Notes |
|---|---|---|---|
| Commands | OP[7:0] | $10000001_B$: Start WCK2DQI Interval Oscillator<br>$10000010_B$: Stop WCK2DQI Interval Oscillator<br>$10000011_B$: Start WCK2DQO Interval Oscillator<br>$10000100_B$: Stop WCK2DQO Interval Oscillator<br>$10000101_B$: ZQ CAL Start<br>$10000110_B$: ZQ CAL Latch<br>All Others: Reserved | |

### 7.6.14 tWCK2DQ Interval Oscillator

As voltage and temperature change on the SDRAM die, the WCK clock tree delay will shift and may require re-training. The LPDDR5-SDRAM includes an internal CK based WCK2DQx Interval Oscillator to measure the amount of delay over a given time interval (determined by the controller), allowing the controller to compare the trained delay value to the delay value seen at a later time. The CK based WCK2DQx Interval Oscillator will provide the controller with important information regarding the need to re-train, and the magnitude of potential error in WCK clock tree. In order to provide low power interval oscillator to user, the WCK2DQx Interval Oscillator counts the number of CK cycles, not the number of WCK cycles.

The WCK2DQx Interval Oscillator is started by issuing a MPC [Start WCK2DQI Osc] or MPC [Start WCK2DQO Osc] command with OP[7:0] set as described in the MPC Operation section, which will start an internal ring oscillator. A counter is implemented to count the number of times a signal propagates through a replica of the WCK clock tree during the established time interval.

The WCK2DQx Interval Oscillator may be stopped by issuing a MPC [Stop WCK2DQI Osc] or MPC [Stop WCK2DQO Osc] command with OP[7:0] set as described in the MPC Operation section, or the controller may instruct the SDRAM to count for a specific number of clocks and then stop automatically (See MR37/MR40 for more information). If MR37 or MR40 is set to automatically stop the WCK2DQx Interval Oscillator, then the MPC [Stop WCK2DQI Osc] or MPC [Stop WCK2DQO Osc] command should not be used (illegal). MR37 WCK2DQI interval timer run time setting is prohibited to change during WCK2DQI Interval Oscillator is running. As with MR37, MR40 WCK2DQO interval timer run time setting is prohibited to change during WCK2DQO Interval Oscillator is running. When the WCK2DQx Interval Oscillator is stopped by either method, the result of the oscillator counter for WCK2DQI is automatically stored in MR35 and MR36, and the data for WCK2DQO is also stored in MR38 and MR39.

A new MPC [Start WCK2DQI Osc] or MPC [Start WCK2DQO Osc] command with OP[7:0] can be issued, and the new MPC [Start WCK2DQI Osc] or MPC [Start WCK2DQO Osc] command will reset the stored result in MR35/36 or MR38/39, respectively. If power down or deep sleep mode command is issued while WCK2DQ Interval Oscillator is operating, DRAM will stop operating oscillator. In this case, results stored in MR35/36 or MR38/39 are invalid and shall be ignored.

WCK2DQI Interval Oscillator and WCK2DQO Interval Oscillator cannot be operated simulataneously. After completing WCK2DQI(or WCK2DQO) Interval Oscillator operation, WCK2DQO (or WCK2DQI) Interval Oscaillator Start MPC can be issued. To track tWCK2DQx variation of different WCK frequency modes (MR18 OP[3]), user can specify WCK2DQx oscillator for WCK low or high frequency mode via MR18 OP[5]. When operating in WCK low frequency mode (MR18 OP[3]=$0_B$), WCK2DQx oscillator for WCK high frequency mode (MR18 OP[5]=$1_B$) can be enabled and vice versa.

The controller may adjust the accuracy of the result by running the WCK2DQx Interval Oscillator for shorter (less accurate) or longer (more accurate) duration. The accuracy of the result for a given temperature and voltage is determined by the following equation:

$$\textbf{WCK2DQx Interval Oscillator Granularity Error} = \frac{2 * (\boldsymbol{WCK2DQx\ Delay})}{\boldsymbol{Run\ Time}}$$

Where:

Run Time = Total time between start and stop commands

WCK2DQ delay = the value of the WCK clock tree delay (tWCK2DQ min/max)

Additional matching error must be included, which is the difference between WCK training circuit and the actual WCK clock tree across voltage and temperature.

Therefore, the total accuracy of the WCK2DQx Interval Oscillator counter is given by:

**WCK2DQx Interval Oscillator Accuracy = 1 - Granularity Error - Matching Error**

**Example:** If the total time between start and stop commands is 200ns, and the maximum WCK clock tree delay is 1600ps (tWCK2DQO max), then the WCK Oscillator Granularity Error is:

$$\textbf{WCK2DQx Interval Oscillator Granularity Error} = \frac{2 * (\boldsymbol{1.6ns})}{\boldsymbol{200ns}} = \boldsymbol{1.6\%}$$

This equates to a granularity timing error of 25.6ps.

Assuming a circuit Matching Error of 5.5ps across voltage and temperature, then the accuracy is:

$$\textbf{WCK2DQx Interval Oscillator Accuracy} = \boldsymbol{1 - \frac{25.6ps + 5.5ps}{1600ps} = 98.06\%}$$

**Example:** Running the WCK Oscillator for a longer period improves the accuracy. If the total time between start and stop commands is 500ns, and the maximum WCK clock tree delay is 1600ps (tWCK2DQO max), then the WCK Oscillator Granularity Error is:

$$\textbf{WCK2DQx Oscillator Granularity Error} = \frac{2 * (\boldsymbol{1.6ns})}{\boldsymbol{500ns}} = \boldsymbol{0.64\%}$$

This equates to a granularity timing error of 10ps.

Assuming a circuit Matching Error of 5.5ps across voltage and temperature, then the accuracy is:

$$\textbf{WCK2DQx Oscillator Accuracy} = \boldsymbol{1 - \frac{10ps + 5.5ps}{1600ps} = 99.0\%}$$

The result of the WCK2DQx Interval Oscillator is defined as the number of CK cycles which reflects WCK Clock Tree Delays that are counted during the run time determined by the controller. The result for WCK2DQI is stored in MR35-OP[7:0] and MR36-OP[7:0], and that for WCK2DQO is also stored in MR38-OP[7:0] and MR39-OP[7:0]. MR35 and MR38 contain the least significant bits (LSB) of the result for WCK2DQI and WCK2DQO, respectively. MR36 andMR39 contain the most significant bits (MSB) of the result for WCK2DQI and WCK2DQO, respectively.

MR35 and MR36 are overwritten by the SDRAM when a MPC-1 [Stop WCK2DQI Osc] command is received. Similarly, for a WCK2DQI stop command, MR38 and MR39 is also overwritten when SDRAM receives MPC-1 [Stop WCK2DQO Osc] command.

The SDRAM counter will count to its maximum value (=2^16) and stop. If the maximum value is read from the mode registers, then the memory controller must assume that the counter overflowed the register and discard the result. The longest “run time” for the oscillator that will not overflow the counter registers can be calculated as follows:

$$\text{Longest WCK2DQI Run Time Interval} = 2^{16} * \text{tWCK2DQ(min)} = 2^{16} * 0.3\text{ns} = 19.66\text{us}$$

$$\text{Longest WCK2DQO Run Time Interval} = 2^{16} * \text{tWCK2DQ(min)} = 2^{16} * 0.65\text{ns} = 42.6\text{us}$$

### 7.6.14.1 Interval Oscillator Matching Error

The interval oscillator matching error is defined as the difference between the WCK training circuit (interval oscillator) and the actual WCK clock tree across voltage and temperature.

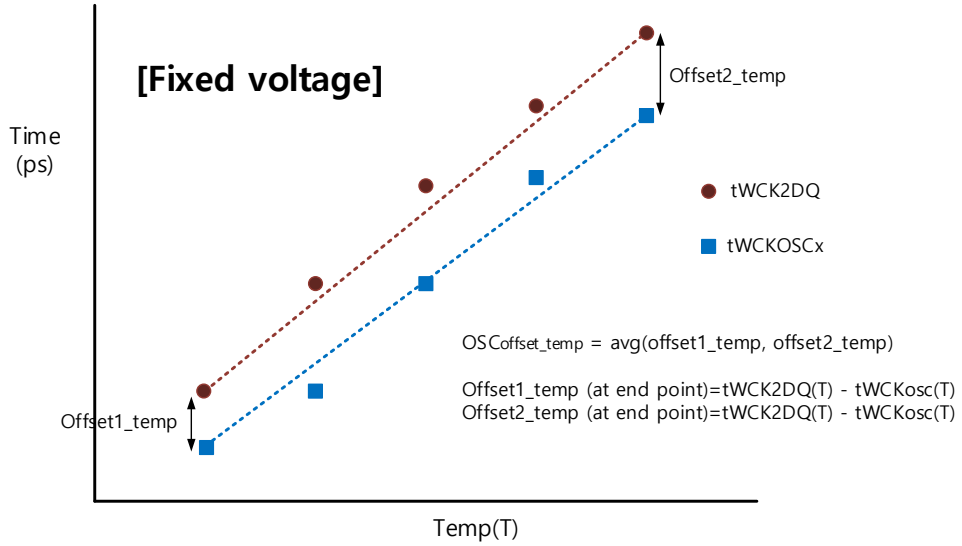


**Figure 197 - Interval oscillator offset_temp**

- $OSC_{Match_temp}$ : $\mathbf{OSC_{Match_temp} = [tWCK2DQ_{(T)} - tWCKosc_{(T)} - OSC_{offset_temp}]}$
- tWCKosc(T) : $\mathbf{tWCKosc(T)} = \frac{\boldsymbol{Run\ Time}}{\mathbf{2}*\boldsymbol{Count}}$

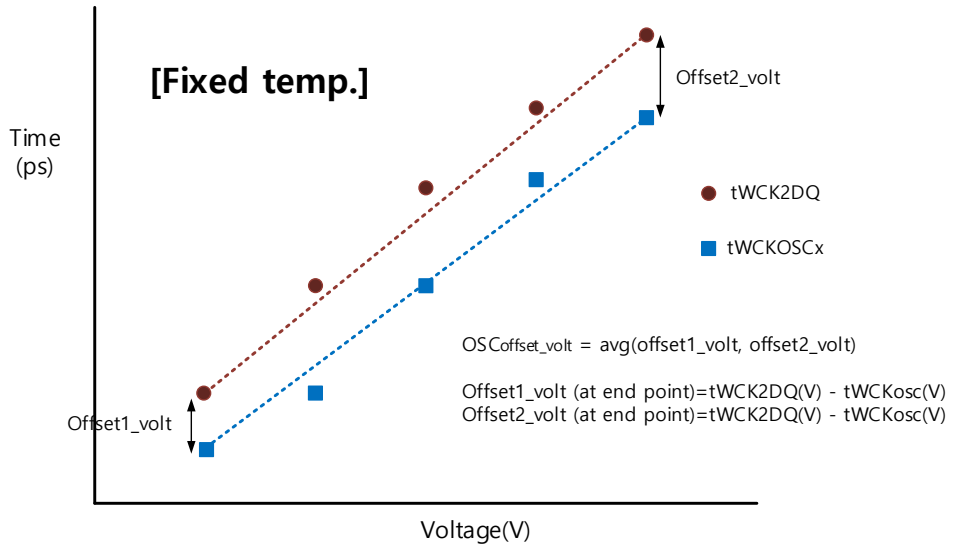


**Figure 198 - Interval oscillator offset_volt**

- $OSC_{Match_volt}$ : $\mathbf{OSC_{Match_volt} = [tWCK2DQ_{(V)} - tWCKosc_{(V)} - OSC_{offset_volt}]}$
- tWCKosc(V) : $\mathbf{tWCKosc(V)} = \frac{\boldsymbol{Run\ Time}}{\mathbf{2}*\boldsymbol{Count}}$

**Table 273 - WCK Oscillator Matching Error Specification for HF mode**

| Parameter | Symbol | Min | Max | Units | Notes |
|---|---|---|---|---|---|
| Write WCK Oscillator Matching Error: voltage variation | $WOSC_{Match_volt}$ | -7.5 | 7.5 | ps | 1,2,3,5 |
| Write WCK Oscillator Error: Temperature variation | $WOSC_{Match_temp}$ | -7.5 | 7.5 | ps | 1,2,3,5 |
| Write WCK Oscillator Offset For voltage variation | $WOSC_{offset_volt}$ | -100 | 100 | ps | 2,5 |
| Write WCK Oscillator Offset For temp variation | $WOSC_{offset_temp}$ | -100 | 100 | ps | 2,5 |
| Read WCK Oscillator Matching Error: voltage variation | $ROSC_{Match_volt}$ | -20 | 20 | ps | 1,2,3,6 |
| Read WCK Oscillator Error: Temperature variation | $ROSC_{Match_temp}$ | -20 | 20 | ps | 1,2,3,6 |
| Read WCK Oscillator Offset For voltage variation | $ROSC_{offset_volt}$ | -200 | 200 | ps | 2,6 |
| Read WCK Oscillator Offset For voltage variation | $ROSC_{offset_temp}$ | -200 | 200 | ps | 2,6 |

NOTE 1 The WOSCmatch or ROSCmatch is the matching error per between the actual WCK and WCK interval oscillator over voltage and temp.
NOTE 2 This parameter will be characterized or guaranteed by design.
NOTE 3 The input stimulus for tWCK2DQ will be consistent over voltage and temp conditions.
NOTE 4 tWCK2DQ(V,T) delay will the average of WCK to DQ delay over the runtime period.
NOTE 5 The matching error and offset of WOSC is from WCK2DQI interval oscillator.
NOTE 6 The matching error and offset of ROSC is from WCK2DQO interval oscillator.

**Table 274 - WCK Oscillator Matching Error Specification for LF mode**

| Parameter | Symbol | Min | Max | Units | Notes |
|---|---|---|---|---|---|
| Write WCK Oscillator Matching Error: voltage variation | $WOSC_{Match_volt}$ | TBD | TBD | ps | 1,2,3,5 |
| Write WCK Oscillator Error: Temperature variation | $WOSC_{Match_temp}$ | TBD | TBD | ps | 1,2,3,5 |
| Write WCK Oscillator Offset: Voltage variation | $WOSC_{offset_volt}$ | TBD | TBD | ps | 2,5 |
| Write WCK Oscillator Offset: Temperature variation | $WOSC_{offset_temp}$ | TBD | TBD | ps | 2,5 |
| Read WCK Oscillator Matching Error: voltage variation | $ROSC_{Match_volt}$ | TBD | TBD | ps | 1,2,3,6 |
| Read WCK Oscillator Error: Temperature variation | $ROSC_{Match_temp}$ | TBD | TBD | ps | 1,2,3,6 |
| Read WCK Oscillator Offset: Voltage variation | $ROSC_{offset_volt}$ | TBD | TBD | ps | 2,6 |
| Read WCK Oscillator Offset: Temperature variation | $ROSC_{offset_temp}$ | TBD | TBD | ps | 2,6 |

NOTE 1 The WOSCmatch or ROSCmatch is the matching error per between the actual WCK and WCK interval oscillator over voltage and temp.
NOTE 2 This parameter will be characterized or guaranteed by design.
NOTE 3 The input stimulus for tWCK2DQ will be consistent over voltage and temp conditions.
NOTE 4 tWCK2DQ(V,T) delay will the average of WCK to DQ delay over the runtime period.
NOTE 5 The matching error and offset of WOSC is from WCK2DQI interval oscillator.
NOTE 6 The matching error and offset of ROSC is from WCK2DQO interval oscillator.

### 7.6.14.2 WCK2DQI/O interval Oscillator Readout Timing

#### 7.6.14.2.1 WCK2DQI interval Oscillator

WCK2DQI interval Oscillator Stop to its counting value readout timing is shown in **Figure 199** and **Figure 200**.

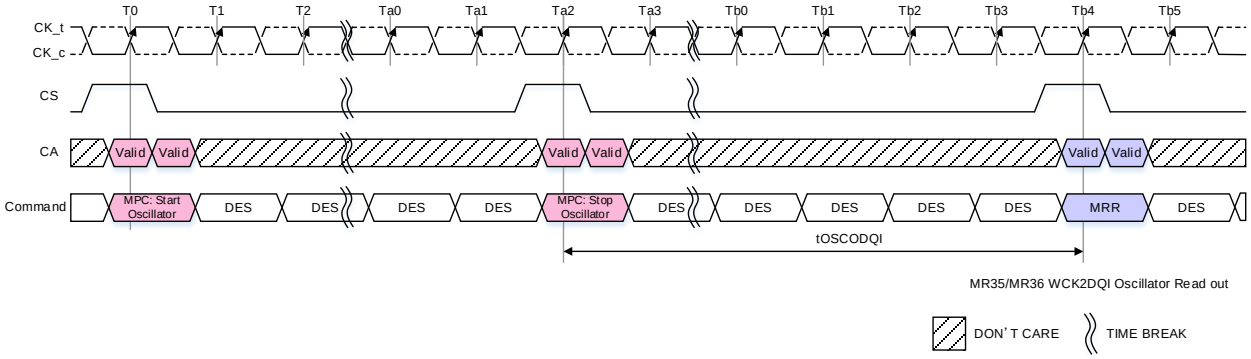


NOTE 1 The combination of “MPC: Start Oscillator” and “MPC: Stop Oscillator” is as following. Start WCK2DQI Interval Oscillator and Stop WCK2DQI Interval Oscillator.
NOTE 2 WCK2DQI interval timer run time: MR37 OP[7:0]=$00000000_B$.
NOTE 3 DES commands are shown for ease of illustration; other commands may be valid at these times.

**Figure 199 - In case of WCK2DQI Interval Oscillator is stopped by MPC Command**

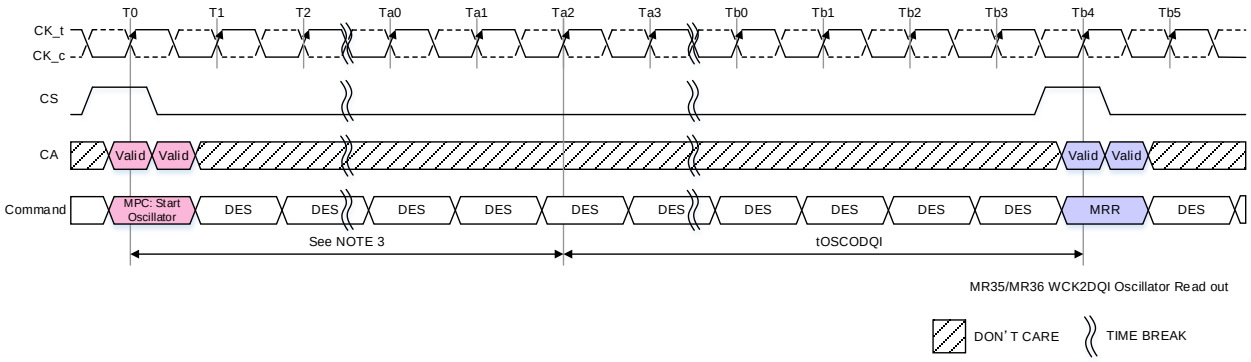


NOTE 1 The combination of “MPC: Start Oscillator” and “MPC: Stop Oscillator” is as following. Start WCK2DQI Interval Oscillator and Stop WCK2DQI Interval Oscillator.
NOTE 2 WCK2DQI interval timer run time: MR37 OP[7:0] ≠ $00000000_B$.
NOTE 3 Setting counts of MR37 for WCK2DQI interval Oscillator.
NOTE 4 DES commands are shown for ease of illustration; other commands may be valid at these times.

**Figure 200 - In case of WCK2DQI Interval Oscillator is stopped by Interval Timer**

### 7.6.14.2.2 WCK2DQO interval Oscillator

WCK2DQO interval Oscillator Stop to its counting value readout timing is shown in **Figure 201** and **Figure 202**.

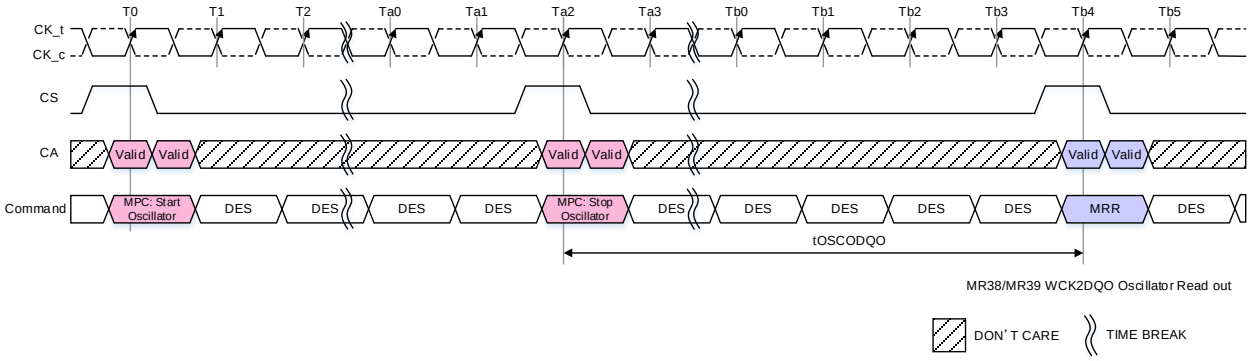


NOTE 1 The combination of “MPC: Start Oscillator” and “MPC: Stop Oscillator” is as following. Start WCK2DQO Interval Oscillator and Stop WCK2DQO Interval Oscillator.
NOTE 2 WCK2DQO interval timer run time: MR40 OP[7:0]=$00000000_B$.
NOTE 3 DES commands are shown for ease of illustration; other commands may be valid at these times.

**Figure 201 - In case of WCK2DQO Interval Oscillator is stopped by MPC Command**

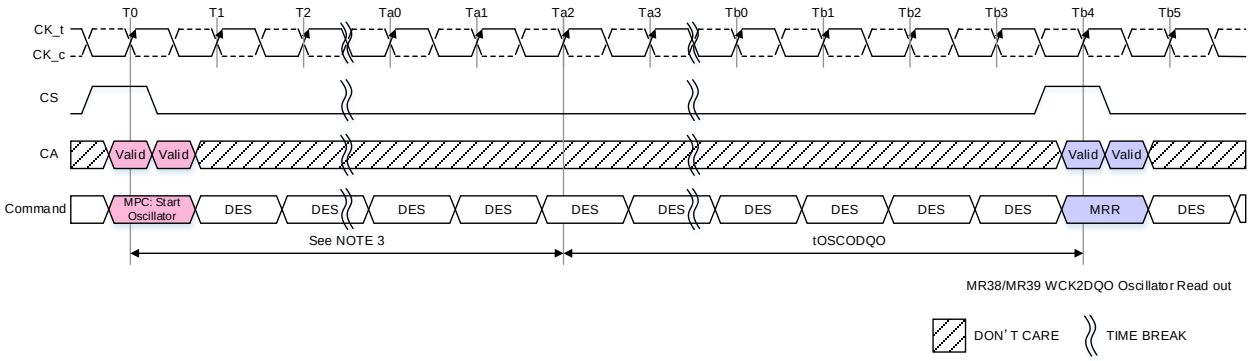


NOTE 1 The combination of “MPC: Start Oscillator” and “MPC: Stop Oscillator” is as following. Start WCK2DQO Interval Oscillator and Stop WCK2DQO Interval Oscillator.
NOTE 2 WCK2DQO interval timer run time: MR40 OP[7:0] ≠ $00000000_B$.
NOTE 3 Setting counts of MR40 for WCK2DQO interval Oscillator.
NOTE 4 DES commands are shown for ease of illustration; other commands may be valid at these times.

**Figure 202 - In case of WCK2DQO Interval Oscillator is stopped by Interval Timer**

### 7.6.14.3 WCK2DQI(O) Interval Oscillator Start/Stop Command Constraints

WCK2DQI/WCK2DQO Interval Oscillator Start/Stop Command Constraints is shown in **Figure 203**.

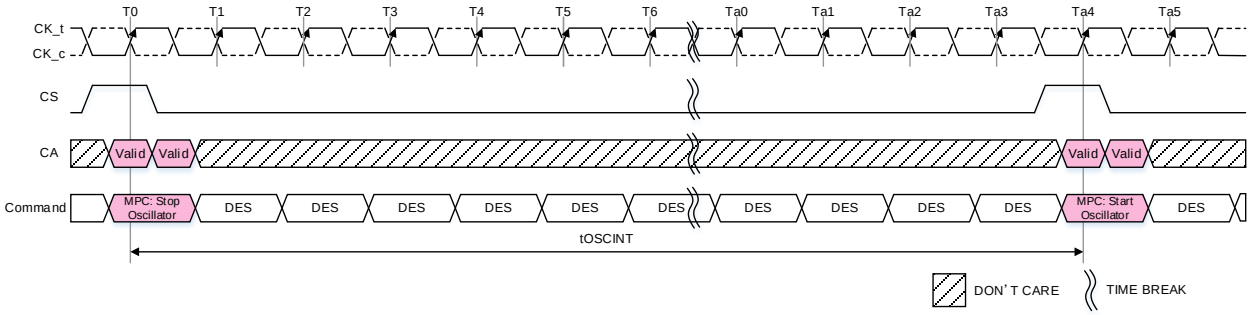


NOTE 1 This parameter applies a following combination.
- MPC Stop WCK2DQI Interval Oscillator to MPC Start WCK2DQO Interval Oscillator.
- MPC Stop WCK2DQO Interval Oscillator to MPC Start WCK2DQI Interval Oscillator.
- MPC Stop WCK2DQI Interval Oscillator to MPC Start WCK2DQI Interval Oscillator.
- MPC Stop WCK2DQO Interval Oscillator to MPC Start WCK2DQO Interval Oscillator.

**Figure 203 - WCK2DQI/WCK2DQO Interval Oscillator Start/Stop Command Constraints Timing**

**Table 275 - WCK2DQI/WCK2DQO Interval Oscillator AC Timing**

| Parameter | Symbol | Min/ Max | Value | Units | Notes |
|---|---|---|---|---|---|
| Delay time from Stop WCK2DQI Interval Oscillator command to Mode Register Readout | tOSCODQI | Min | Max(40ns,8nCK) | ns | |
| Delay time from Stop WCK2DQO Interval Oscillator command to Mode Register Readout | tOSCODQO | Min | Max(40ns,8nCK) | ns | |
| Delay time from MPC OSC Stop command to MPC OSC Start command | tOSCINT | Min | Max(40ns,8nCK) | ns | |

## 7.7 Specific features, Reliability & Power-optimization

### 7.7.1 Dynamic Voltage and Frequency Scaling (DVFS)

LPDDR5 Dynamic Voltage and Frequency Scaling (DVFS) consists of two modes intended to reduce the LPDRAM energy consumption. The two modes are DVFSC (DVFS Core) and DVFSQ (DVFS $V_{DDQ}$).

#### 7.7.1.1 DVFSC Mode

In DVFSC mode, when enabled by MR19 OP[1:0]=$01_B$, the LPDRAM may operate internal circuitry from either the $V_{DD2H}$ rail or the $V_{DD2L}$ rail. When the memory controller commands a FSP change, the LPDRAM may internally switch some internal circuits from one rail to the other. This switching will complete within tFC, when normal operation at the new frequency set point may commence. DVFSC mode changes are only allowed as part of FSP-OP switching. Changes to DVFSC mode by direct programming of MR19 OP[1:0] for the current operating point are illegal.

Some LPDRAM operations will take longer to complete when DVFSC is enabled. Latencies and AC timing parameters are specified in separate tables depending on the current DVFSC state of the LPDRAM.

Application usage of DVFSC mode is optional. Systems which will not implement DVFSC must supply the specified $V_{DD2H}$ voltage level to both the $V_{DD2H}$ and $V_{DD2L}$ rails of the LPDRAM, and must set MR13 OP[7]=1 and MR19 OP[1:0]=00B at all times.

Figures 1 and 2 below illustrate DVFSC high-to-low and low-to-high timing respectively. In these diagrams commands other than the FSP switch are shown as examples only. For more information on FSP switching refer to the section “Frequency Set Points”.

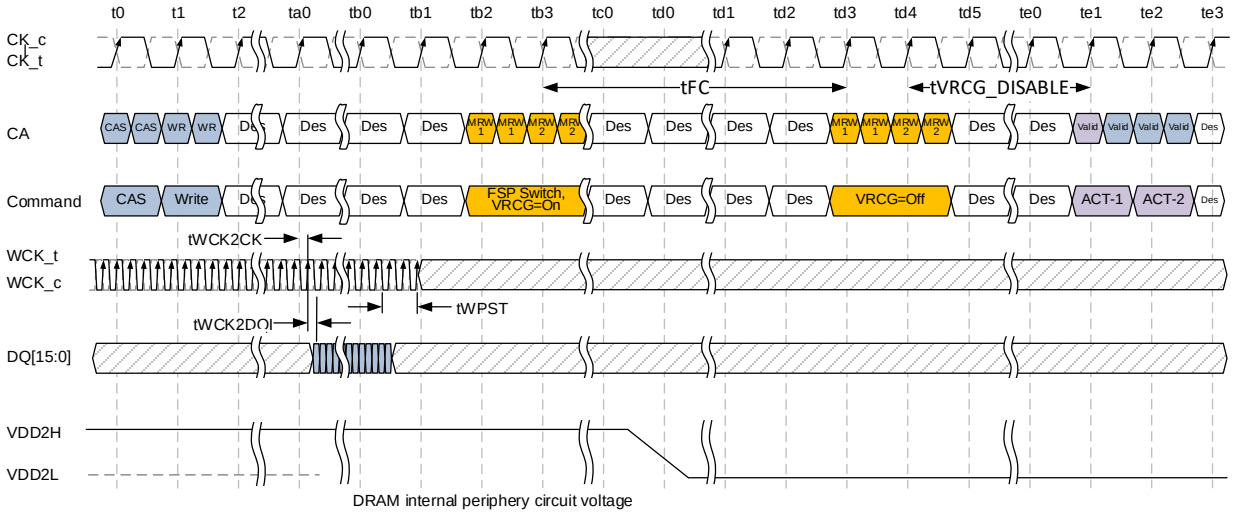


**Figure 204 – DVFSC High (VDD2H) to Low (VDD2L) Transition**

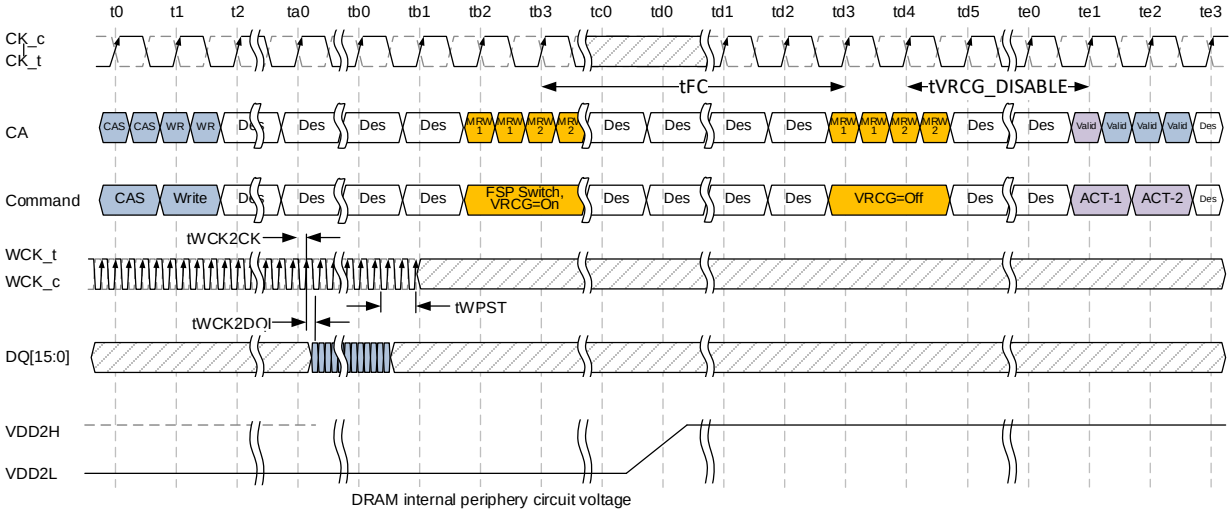


**Figure 205 – DVFSC Low (VDD2L) to High (VDD2H) Transition**

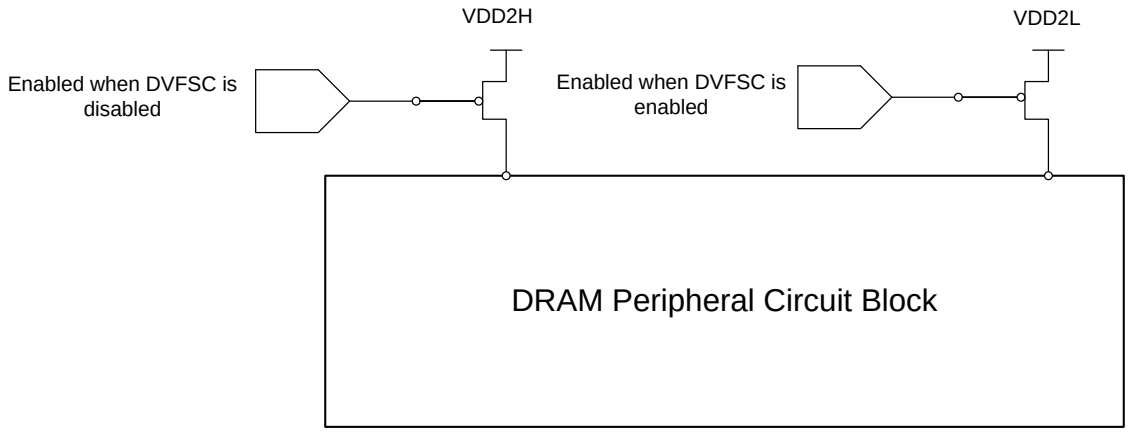


**Figure 206 – Example DVFSC Block Diagram**

### 7.7.1.2 DVFSQ Mode

LPDDR5 devices can allow the $V_{DDQ}$ to be ramped during operation including Read/Write transactions. Exact speeds and levels are to be determined by the system builder according to the limits specified in this standard, their own system limitations, and at their own risk. Some guidelines are:
If operation of the LPDRAM will be halted during the $V_{DDQ}$ voltage ramp

1. The device must be placed in power-down mode or CS held low until the voltage ramp is complete
2. Re-calibration is recommended before high-speed operation at VDDQ=0.5v nominal after ramping the VDDQ level
3. FSP change to appropriate new settings should occur before operation at the new level

If operation of the LPDRAM during the $V_{DDQ}$ voltage ramp is intended

1. The LPDRAM should be operated at settings and speeds suitable for the lowest $V_{DDQ}$ level
2. Operation with ODT disabled is highly recommended, and generally required for $V_{DDQ}$ levels below 0.5V nominal
3. The $V_{DDQ}$ voltage ramp should always be equal or slower than the specified limits
4. Recommended to set VRCG enabled to ensure internal Vref tracking of the changing $V_{DDQ}$ level
5. Re-calibration is recommended before high-speed operation at VDDq=0.5v nominal after ramping the VDDQ level
6. FSP change to appropriate new settings should occur before higher-speed operation at the new level

#### 7.7.1.2.1 DVFSQ High-to-Low Transition

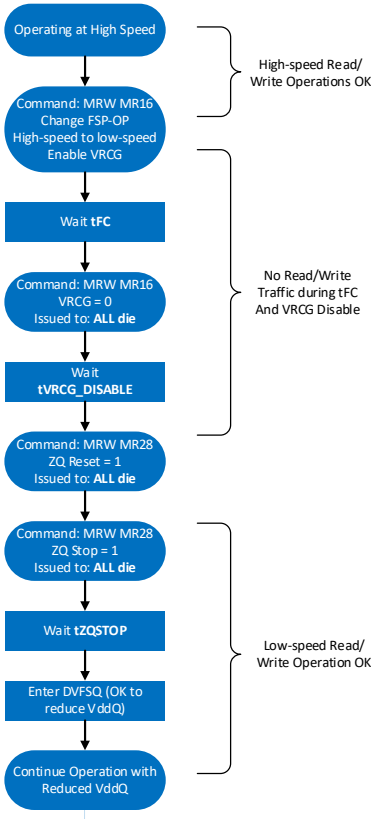


An example DVFSQ high-to-low transition sequence is:

1. Operating at high speed with VddQ=0.5v nominal
2. FSP switch from high frequency to a low frequency suitable for non-ODT operation, enable VRCG
3. Wait tFC (stall traffic)
4. Issue MRW MR16 – set VRCG = 0
5. Wait tVRCG_DISABLE (stall traffic)
6. Issue MRW MR28 – ZQ reset OP[0] = 1 to set default ZQ strength to meet VDDQ = 0.3V operation
7. Wait tZQRESET without ZQ latch
8. Issue MRW MR28 – set ZQ Stop=1 to disable background calibration
9. Wait tZQSTOP
10. Enter DVFSQ (reduce VDDQ below 0.5v nominal)
11. Continue operation with reduced VddQ

Background ZQ Calibration mode is assumed. Refer to Section 4.2.1 'LPDDR5 ZQ Calibration' for details and options related to ZQ requirements.

**Figure 207 – DVFSQ High (VDDQ) to Low Transition Flow Chart**

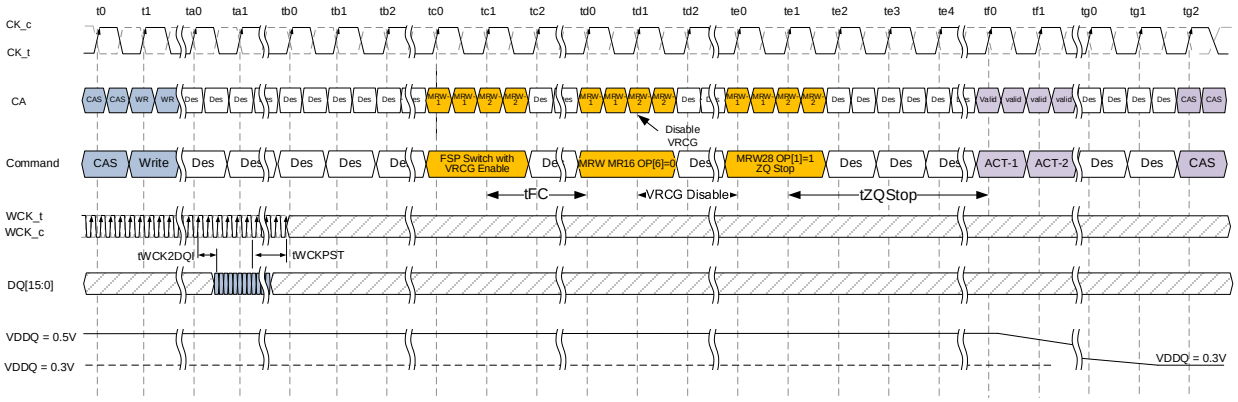


**Figure 208 – DVFSQ High (VDDQ) to Low Transition Timing**

### 7.7.1.2.2 DVFSQ Low-to-High Transition without VRCG during VDDQ ramp

An example DVFSQ low-to-high transition sequence is:

1. Operating at low speed with VDDQ<0.5v nominal
2. Ramp VDDQ up to 0.5v nominal
3. Issue MRW MR28 – set ZQ Stop=0 to enable background calibration
4. Wait tZQCALx
5. FSP switch from low frequency to high frequency and VRCG enabled
6. Wait tFC (stall traffic)
7. Issue MRW 16 to disable VRCG
8. Wait tVRCG_DISABLE (stall traffic)
9. Begin high-speed operation with VDDQ=0.5v nominal

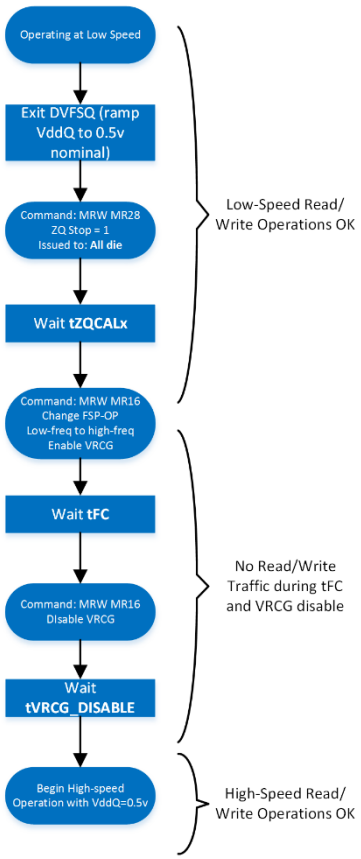


**Figure 209 – DVFSQ Low (VDDQ) to High (VDDQ) Transition Flow Chart without VRCG**

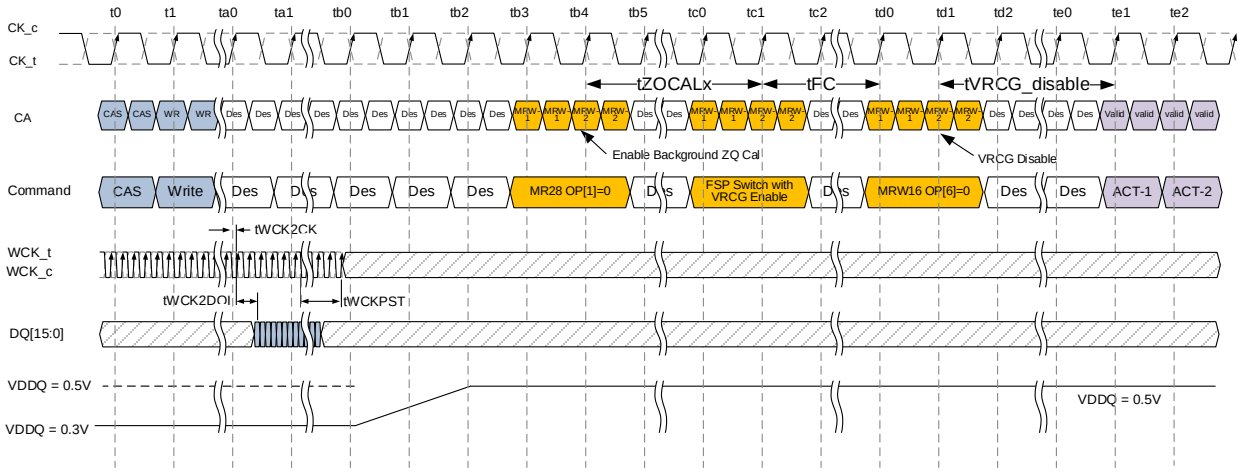


**Figure 210 – DVFSQ Low (VDDQ) to High Transition Timing without VRCG during VDDQ ramp**

### 7.7.1.2.3 DVFSQ Low-to-High Transition with VRCG

Enabling VRCG before a VDDQ level transition allows the VREF circuits to accurately track during higher VDDQ slew rates, as shown in table 1 below. An example DVFSQ low-to-high transition sequence including use of VRCG mode is:

1. Operating at low speed with VddQ<0.5v nominal
2. Enable VRCG
3. Wait tVRCG_enable (stall traffic)
4. Ramp VddQ up to 0.5v nominal
5. Issue MRW MR28 – set ZQ Stop=0 to enable background calibration
6. Wait tZQCALx
7. FSP switch from low frequency to high frequency
8. Wait tFC (stall traffic)
9. Disable VRCG
10. Wait tVRCG_disable (continue stall traffic)
11. Begin high-speed operation with VddQ=0.5v nominal

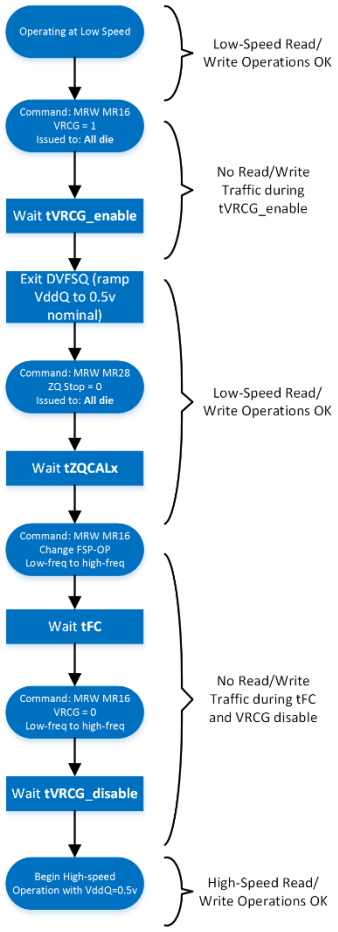


**Figure 211 – DVFSQ Low (VDDQ) to High (VDDQ) Transition Flow Chart with VRCG**

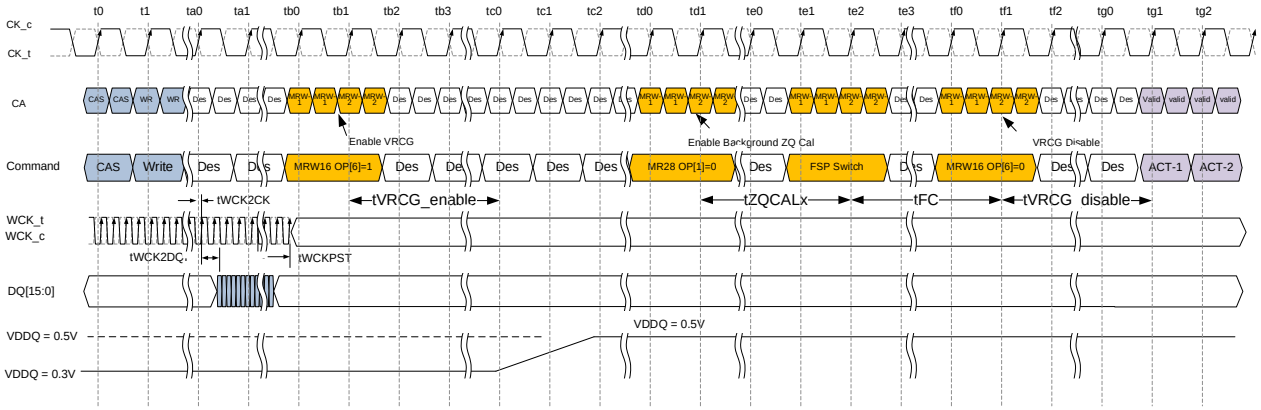


**Figure 212 – DVFSQ Low (VDDQ) to High Transition with VRCG**

In DVFSQ Mode, the $V_{DDQ}$ voltage ramp must conform to the limits in Table 276.

**Table 276 – $V_{DDQ}$ Ramp Rates**

| Parameter | Symbol | Max/Min | Value | Units |
|---|---|---|---|---|
| $V_{DDQ}$ Slew Rate, VRCG Enabled | VDQSR1 | Max | 20 | mV/us |
| $V_{DDQ}$ Slew Rate, VRCG Disabled | VDQSR2 | Max | 4.8 | mV/us |

### 7.7.2 Data Copy Low Power Function

LPDDR5 device can support a data copy low power function to reduce LPDDR5 IO and core power (IDD4W, IDD4R) consumption by utilizing data pattern repeatability per 8Byte data copy granularity. If LPDDR5 device support the data copy function (MR21 OP[0]= $1_B$ (WDCFS, WRITE Data Copy Function Supported) and/or MR21 OP[1]= $1_B$ (RDCFS, READ Data Copy Function Supported)), users may enable the data copy function by MR21 programming (MR21 OP[4]=$1_B$ (WDCFE, WRITE Data Copy Function Enable) and/or MR21 OP[5]=$1_B$ (RDCFE, READ Data Copy Function Enable)). The LPDDR5 Data Copy Low Power function is only valid to normal Write and Read operations with the same AC timing conditions. Read latency may increase per Read Data Copy Function enabled (MR21 OP[5]=$1_B$). Refer to LPDDR5 Read latency table.

#### 7.7.2.1 Write Data Copy Function

LPDDR5 Write data copy function is applied to each 8 Byte data granularity per DQ byte, if LPDDR5 device supports the WRITE data copy function (MR21 OP[0]= $1_B$ (WDCFS, WRITE Data Copy Function Supported)) and the WRITE data copy function is enabled by MR21 programming (MR21 OP[4]=$1_B$ (WDCFE, WRITE Data Copy Function Enable)). Whenever any data pattern is repeated over 8Byte data, only the reference data (Reference Data 0-7 in Figure 213) is transferred through one DQ link (DQ0 for a lower DQ byte, DQ8 for an upper DQ byte) per DQ byte from a host to a LPDDR5 device. LPDDR5 device recovers the original 8Byte data by copying the reference data to other 7 DQ data during LPDDR5 device's internal Write operation. Figure 213 illustrates data copy granularity and reference data configuration per X16 channel (BL32).

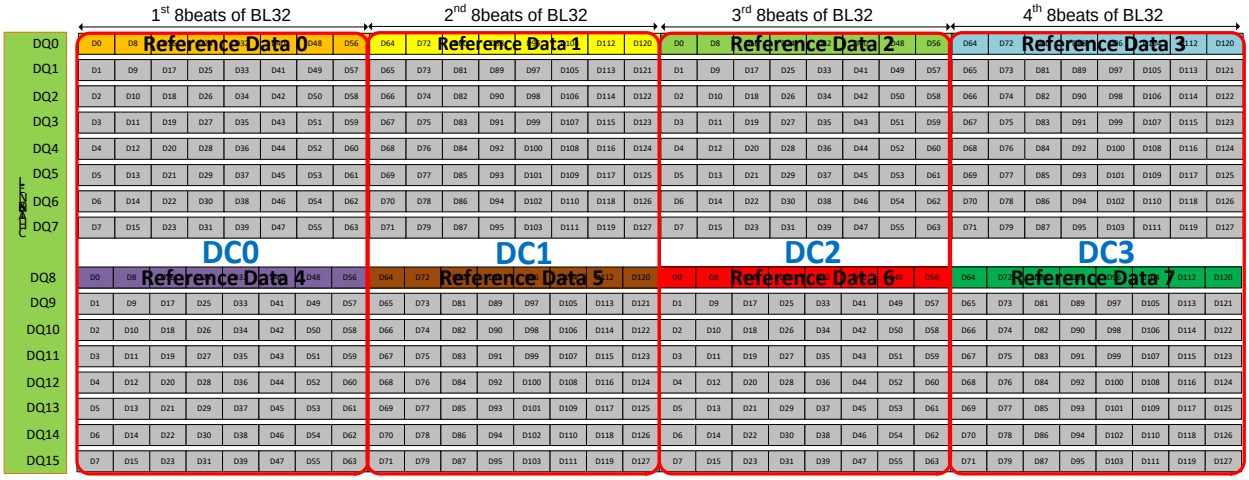


**Figure 213 - Data copy granularity and reference data configuration in BL32**

Each reference data can be any data pattern (i.e. 256 data patterns) and there is no dependence between reference data. Refer to Table 277 about reference data S[7:0] bit mapping details.

**Table 277 - Reference data S[7:0] bit mapping**

| DQ Byte | Burst Cycle Number (Beat of Burst) | | | | | | | |
|---|---|---|---|---|---|---|---|---|
| | 1 | 2 | 3 | 4 | 5 | 6 | 7 | 8 |
| Reference Data S[7:0] through DQ0 | S0 | S1 | S2 | S3 | S4 | S5 | S6 | S7 |
| Original 64bit Data | | | | | | | | |
| DQ0 | D0 | D8 | D16 | D24 | D32 | D40 | D48 | D56 |
| DQ1 | D1 | D9 | D17 | D25 | D33 | D41 | D49 | D57 |
| DQ2 | D2 | D10 | D18 | D26 | D34 | D42 | D50 | D58 |
| DQ3 | D3 | D11 | D19 | D27 | D35 | D43 | D51 | D59 |
| DQ4 | D4 | D12 | D20 | D28 | D36 | D44 | D52 | D60 |
| DQ5 | D5 | D13 | D21 | D29 | D37 | D45 | D53 | D61 |
| DQ6 | D6 | D14 | D22 | D30 | D38 | D46 | D54 | D62 |
| DQ7 | D7 | D15 | D23 | D31 | D39 | D47 | D55 | D63 |

NOTE 1 Data Copy hit occurs when the following bitwise condition is met:
(D0=D1=D2=D3=D4=D5=D6=D7) AND (D8=D9=D10=D11=D12=D13=D14=D15) AND
(D16=D17=D18=D19=D20=D21=D22=D23) AND
(D24=D25=D26=D27=D28=D29=D30=D31) AND
(D32=D33=D34=D35=D36=D37=D38=D39) AND
(D40=D41=D42=D43=D44=D45=D46=D47) AND
(D48=D49=D50=D51=D52=D53=D54=D55) AND
(D56=D57=D58=D59=D60=D61=D62=D63)

NOTE 2 S0 is copied to D0, D1, D2, D3, D4, D5, D6 and D7

NOTE 3 S1 is copied to D8, D9, D10, D11, D12, D13, D14 and D15

NOTE 4 S2 is copied to D16, D17, D18, D19, D20, D21, D22 and D23

NOTE 5 S3 is copied to D24, D25, D26, D27, D28, D29, D30 and D31

NOTE 6 S4 is copied to D32, D33, D34, D35, D36, D37, D38 and D39

NOTE 7 S5 is copied to D40, D41, D42, D43, D44, D45, D46 and D47

NOTE 8 S6 is copied to D48, D49, D50, D51, D52, D53, D54 and D55

NOTE 9 S7 is copied to D56, D57, D58, D59, D60, D61, D62 and D63

CAS command delivers Write data copy hit or miss information to LPDDR5 devices with 4bit operands (DC0 – DC3, refer to LPDDR5 command truth table).

**Table 278 - Write data copy hit or miss operands (DC0 – DC3) of CAS command**

| Write Data Copy Operand of CAS Command | Description | Notes |
|---|---|---|
| DC0 | 0B: Write data copy miss (normal Write)<br>1B: Write data copy hit (reference byte through DQ0 and DQ8) | 1 |
| DC1 | 0B: Write data copy miss (normal Write)<br>1B: Write data copy hit (reference byte through DQ0 and DQ8) | 2 |
| DC2 | 0B: Write data copy miss (normal Write)<br>1B: Write data copy hit (reference byte through DQ0 and DQ8) | 3, 5 |
| DC3 | 0B: Write data copy miss (normal Write)<br>1B: Write data copy hit (reference byte through DQ0 and DQ8) | 4, 5 |

NOTE 1 DC0 is applied to the first 8 beats of BL16 or BL32.
NOTE 2 DC1 is applied to the second 8 beats of BL16 or BL32.
NOTE 3 DC2 is applied to the third 8 beats of BL32.
NOTE 4 DC3 is applied to the fourth 8 beats of BL32.
NOTE 5 DC2 and DC3 are “don’t care” in case of BL16.

Figure 214 shows an example of Write Data Copy function timing diagram in case of a CAS command with DC0=1B, DC1=0B, DC2=1B and DC3=0B.

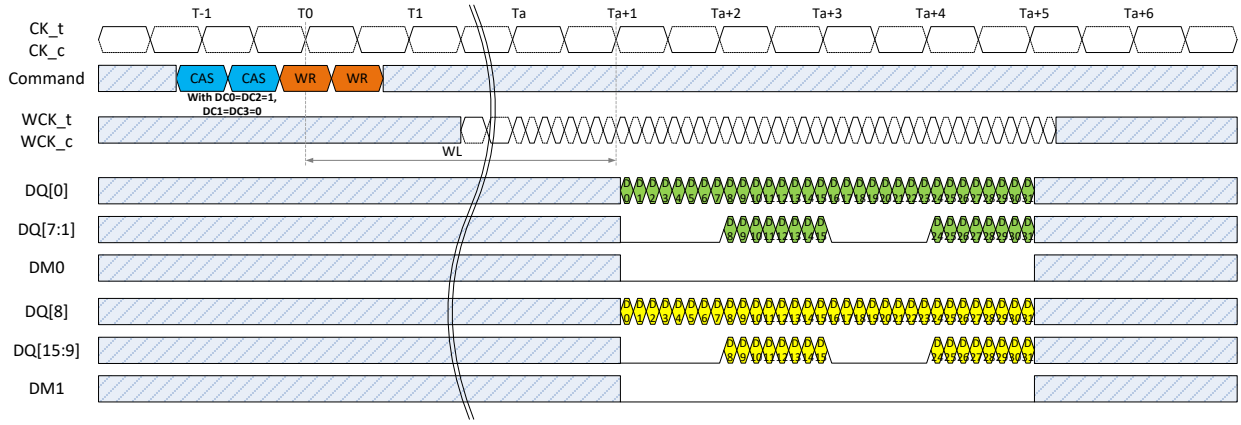


NOTE 1 WCK:CK = 4:1, BL32, ODT on
NOTE 2 CAS command with DC0=1B, DC1=0B, DC2=1B and DC3=0B

**Figure 214 - Example of Write Data Copy Function Timing Diagram**

#### 7.7.2.2 Read Data Copy Function

LPDDR5 Read data copy function is applied to each 8 Byte data granularity per DQ byte, if LPDDR5 device supports the READ data copy function (MR21 OP[1]= $1_B$ (RDCFS, READ Data Copy Function Supported)) and the READ data copy function is enabled by MR21 programming (MR21 OP[5]=$1_B$ (RDCFE, READ Data Copy Function Enable)). LPDDR5 device may include an internal data comparator logic to determine any data pattern repeatability per 8Byte read data during Read operations. If any data pattern repeatability over 8Byte read data is found, LPDDR5 device returns a reference data S[7:0] through one DQ link (DQ0 for a lower DQ byte, DQ8 for an upper DQ byte) per DQ byte and a Read data copy hit or miss flag bit through a DM pin (DM0 for a lower DQ byte, DM1 for an upper DQ byte) to a host system. Read reference data S[7:0] bit mapping is same as Write data copy operation. (Refer to Table 277). LPDDR5 device shall drive other DQs (DQ[7:1] in a lower DQ byte, DQ[15:9] in an upper DQ byte) in 8 Byte data granularity to LOW in case of the Read data copy hit.

**Table 279 - Read data copy hit or miss flag bits in a DM pin**

| DM Burst Data | Description | Notes |
|---|---|---|
| 1st beat of DM burst data (DM-0) | 0B: Read data copy miss (normal Read)<br>1B: Read data copy hit (reference byte through DQ0 (or DQ8)) | 1 |
| 9th beat of DM burst data (DM-8) | 0B: Read data copy miss (normal Read)<br>1B: Read data copy hit (reference byte through DQ0 (or DQ8)) | 2 |
| 17th beat of DM burst data (DM-16) | 0B: Read data copy miss (normal Read)<br>1B: Read data copy hit (reference byte through DQ0 (or DQ8)) | 3 |
| 25th beat of DM burst data (DM-24) | 0B: Read data copy miss (normal Read)<br>1B: Read data copy hit (reference byte through DQ0 (or DQ8)) | 4 |

NOTE 1 DM-0 is a read data copy hit or miss flag bit applied to the first 8 beats of BL16 or BL32.
NOTE 2 DM-8 is a read data copy hit or miss flag bit applied to the second 8 beats of BL16 or BL32.
NOTE 3 DM-16 is a read data copy hit or miss flag bit applied to the third 8 beats of BL32 only.
NOTE 4 DM-24 is a read data copy hit or miss flag bit applied to the fourth 8 beats of BL32 only.

Figure 215 shows an example of Read Data Copy function timing diagram in case of mixed read data copy hit and miss.

Figure 3

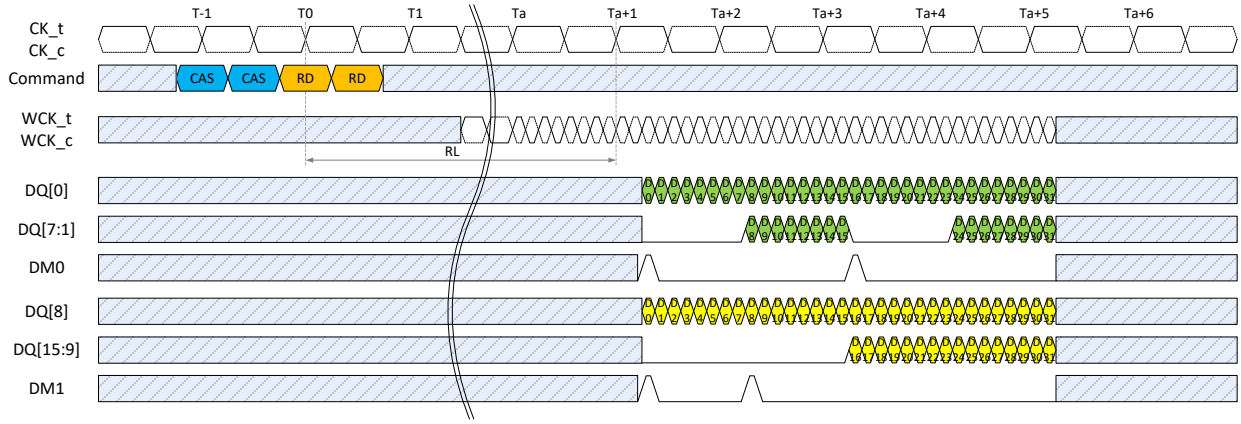


NOTE 1 WCK:CK = 4:1, BL32, ODT on.
NOTE 2 DM0 for a lower byte: DM0-0= 1B, DM0-8= 0B, DM0-16= 1B, DM0-24= 0B
NOTE 3 DM1 for an upper byte: DM1-0= 1B, DM1-8= 1B, DM1-16= 0B, DM1-24= 0B

**Figure 215 - Example of Read Data Copy Function Timing Diagram**

### 7.7.2.3 Read Data Copy Function with Read DBI Enable

LPDDR5 device supports a Data Bus Inversion function in Read operations. The Read data copy hit/miss flag bits can share a DM pin signal with Read DBI bits in case of both functions enabled. If LPDDR5 device supports the READ data copy function (MR21 OP[1]= $1_B$ (RDCFS, READ Data Copy Function Supported)) and the READ data copy function is enabled by MR21 programming (MR21 OP[5]=$1_B$ (RDCFE, READ Data Copy Function Enable)) and the Read DBI function is enabled by MR3 programming (MR3 OP[6]=$1_B$, DBI-RD, Read-DBI_DC Enable), LPDDR5 device drives other DQs (DQ[7:1] in a lower DQ byte, DQ[15:9] in an upper DQ byte) to specific data pattern at 1$^{st}$ and 9$^{th}$ beat of data burst (BL16) or at 1$^{st}$, 9$^{th}$, 17$^{th}$ and 25$^{th}$ beat of data burst data (BL32). When the number of "1" data bits within other DQs at 1$^{st}$ and 9$^{th}$ beat of data burst (BL16) or at 1$^{st}$, 9$^{th}$, 17$^{th}$ and 25$^{th}$ beat of data burst data (BL32), is greater than four, the corresponding DM bit is the Read data copy flag bit. Otherwise, the corresponding DM bit is the Read DBI bit.

### 7.7.3 Write X operation

An LPDDR5 memory system may reduce power in write operation of repeated data pattern utilizing Write X function. Write X function is an optional feature in LPDDR5 device, and the LPDDR5 controller is able to detect its supportability by mode register read of MR21 OP[2]. If the MRR result of MR21 OP[2]=$1_B$, the controller can enable Write X function by setting MR21 OP[6] = $1_B$ by MRW command. A write X command consists of a CAS command and following write command with column address. The CAS command with DC0=0, DC1=0, DC2=0, DC3=0, WRX=H, WXSA=H or L and WXSB=H or L with following write command initiates write X command with either 1's or 0's data write at corresponding column address. Programming the Write X Steering bits controls the pattern at a byte level control via the command.

- WXSA [CA5:F1] = H informs the SDRAM that the first byte pattern DQ[7:0] will be all 1's, while programming WXSA [CA5:F1]=L informs the SDRAM that the first byte pattern DQ[7:0] pattern will be all 0's.

- WXSB [CA6:F1] = H informs the SDRAM that the second byte pattern DQ[15:8] will be all 1's, while programming WXSB[CA6:F1]=L informs the SDRAM that the second byte pattern DQ[15:8] pattern will be all 0's.

If MR setting is MR21 OP[2]=$1_B$ and MR21 OP[7]=$0_B$, SDRAM supports that 'Data to be written is "0" only'. In this case WXSA[CA5:F1] and WXSB[CA6:F1] should be fixed as 'Low'.

**Table 280 - CAS command with write X (zero) enable bits.**

| Command | CS | CA0 | CA1 | CA2 | CA3 | CA4 | CA5 | CA6 | CK |
|---|---|---|---|---|---|---|---|---|---|
| CAS | H | L | L | H | H | V | V | V | R1 |
| | X | DC0=0 | DC1=0 | DC2=0 | DC3=0 | WRX | WXSA | WXSB | F1 |

The write X enable bits in Table 1 are non-sticky bits. After CAS command with write X enabled is issued, followed write commands perform write X. WXSA[CA5:F1] & WXSB[CA6:F1] are only valid when WRX=H. Byte-mode case, WXSA[CA5:F1] is only valid to a lower byte device and WXSB[CA6:F1] is only valid to the upper byte device. If MR21 OP[7]=$0_B$ (Data to be written "0" only), WXSA[CA5:F1] & WXSB[CA6:F1] should be "Low".

The Write X function can be operated to an activated bank without WCK2CK sync and data input to SDRAM's DQ pins. In this case the input of WCK_t/c is required to be valid and compliment level after tWR2WCK from Write command. For example, WCK_t to High and WCK_c to low and vice versa. Additionally, the toggling input to WCK_t/c is possible too, and the toggling input does not transfer to SDRAM internal WCK clock tree at non WCK2CK sync state, hence the power consumption is smaller than Write operation during WCK2CK sync state. Figure 1 shows write X operation without WCK clock. Although write X operation does not require WCK or DQ operation, SDRAM internal write operation occurs at same timing as normal write operation. Therefore, all core timing parameters of write command in Section 7.4.7.1 Write Timing also applies to write X command.

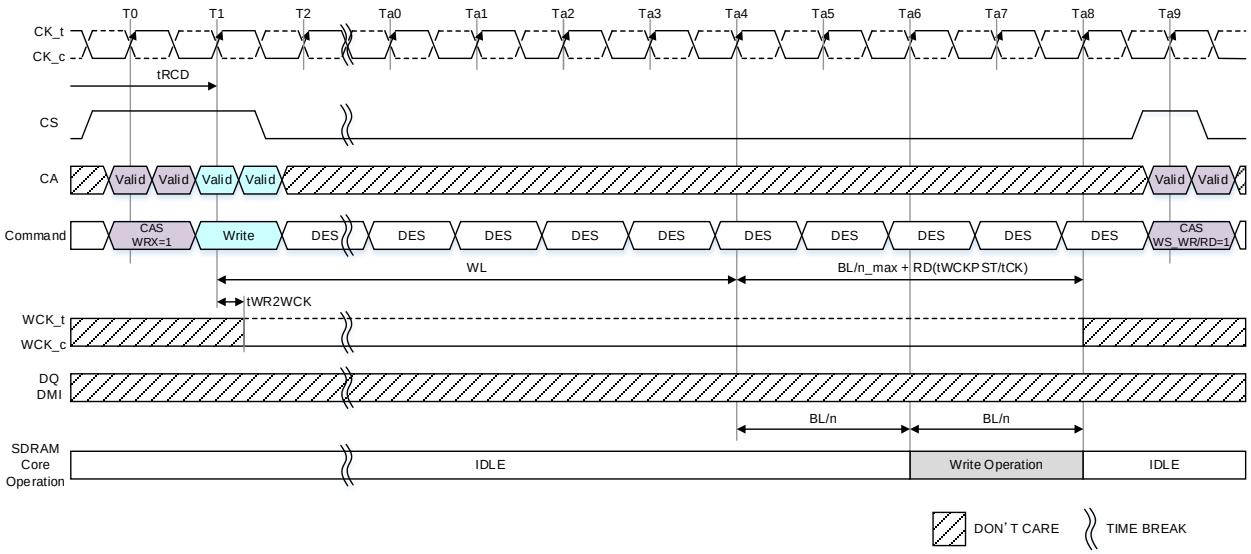


NOTE 1 CAS Sync command is inhibited until Ta8.
NOTE 2 CAS Sync command can be issued after Ta9 (Ta9 is included).
NOTE 3 tWCKPST=2.5nWCK, RD(tWCKPST/tCK)=0.
NOTE 4. The CAS Sync command input timing is applied the same timing as Write command without Write X, see Section 7.2.2 WCK2CK SYNC Off Timing Definition.

**Figure 216 - Write X timing at Sync off: BG Mode, CKR (WCK vs. CK) = 4:1, BL=16**

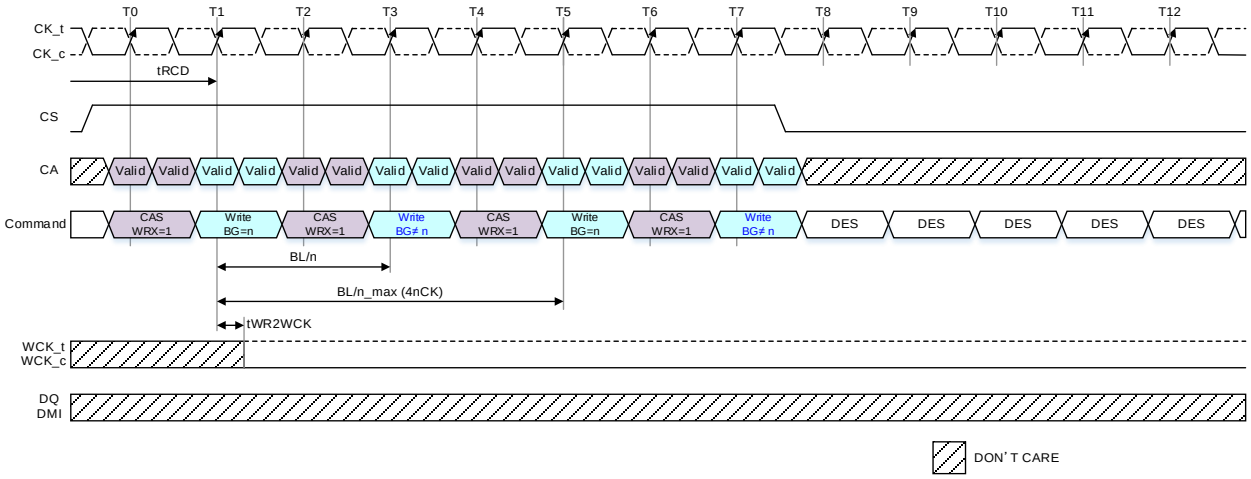


NOTE 1 Write w/ write X timing follows Write w/o Write X timing.

**Figure 217 - Consecutive Write and Write X timing at Sync off: BG Mode, CKR (WCK vs. CK) = 4:1, BL=16**

An LPDDR5 SDRAM controller is allowed issue Write X command in WCK2CK sync'd state. However, SDRAM is not able to turn off WCK buffer in this case, reducing the power saving amount of write X. Like normal write command, write X command extends WCK2CK sync state, as shown in Figure 3.

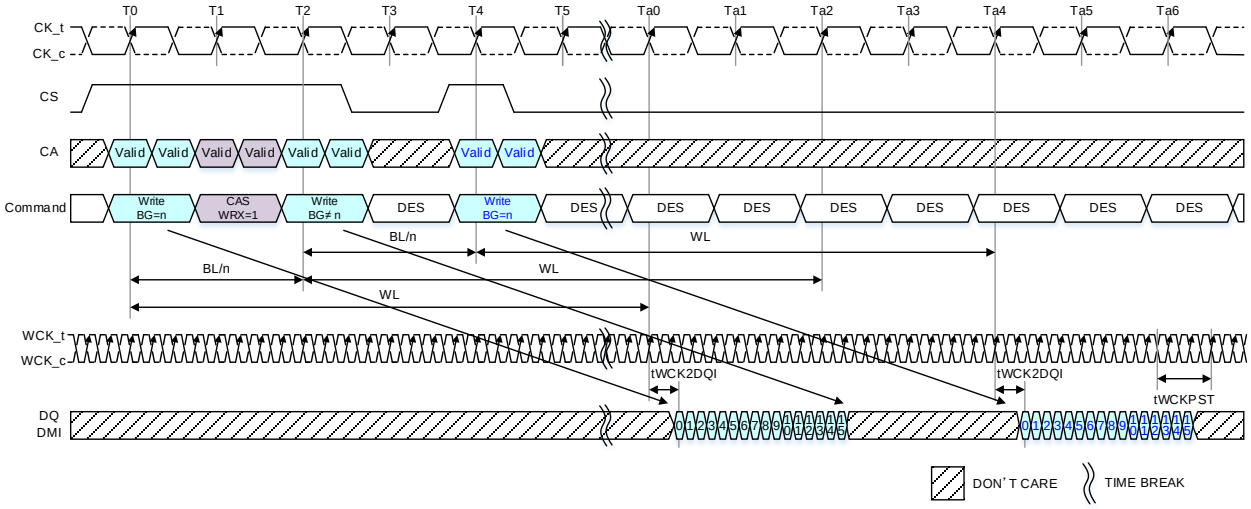


NOTE 1 tWCK2CK is 0ps in this instance.
NOTE 2 Write w/ Write X timing follows Write w/o Write X timing.

**Figure 218 - Consecutive Write and Write X timing at Sync: BG Mode, CKR (WCK vs. CK) = 4:1, BL=16**

The WCK2CK SYNC Off Timing Definition applied Write X command. Figure 4 shows a case where WCK2CK synchronization is continued by the Write X command, and Figure 5 shows a case where it does not continue.

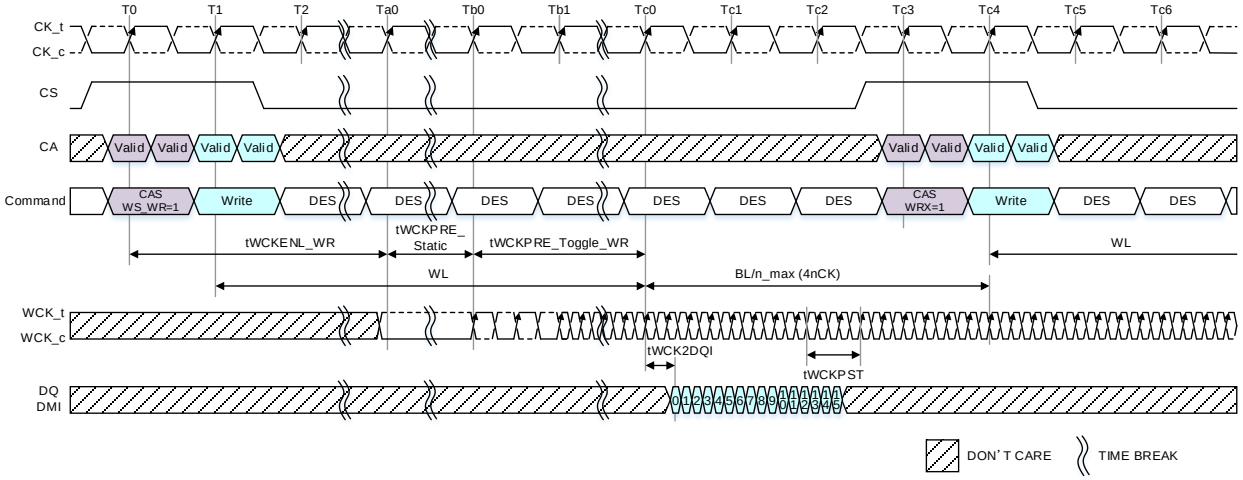


NOTE 1 tWCK2CK is 0ps in this instance.
NOTE 2 The end of both WL and tWCKPRE_Toggle_WR are the same timing in this instance.
NOTE 3 Write w/ write X command can be issued until Tc4.
NOTE 4 tWCKPST=2.5nWCK, RD(tWCKPST/tCK)=0.

**Figure 219 - Write w/ write X issuing timing at Sync state.**

The issuing CAS_WRX command timing is respected the constraint of CAS Sync command after WCK2CK sync is expired in order to the command scheduling becomes easy. For example, issuing CAS_WRX command is inhibited on Tc4 in Figure5.

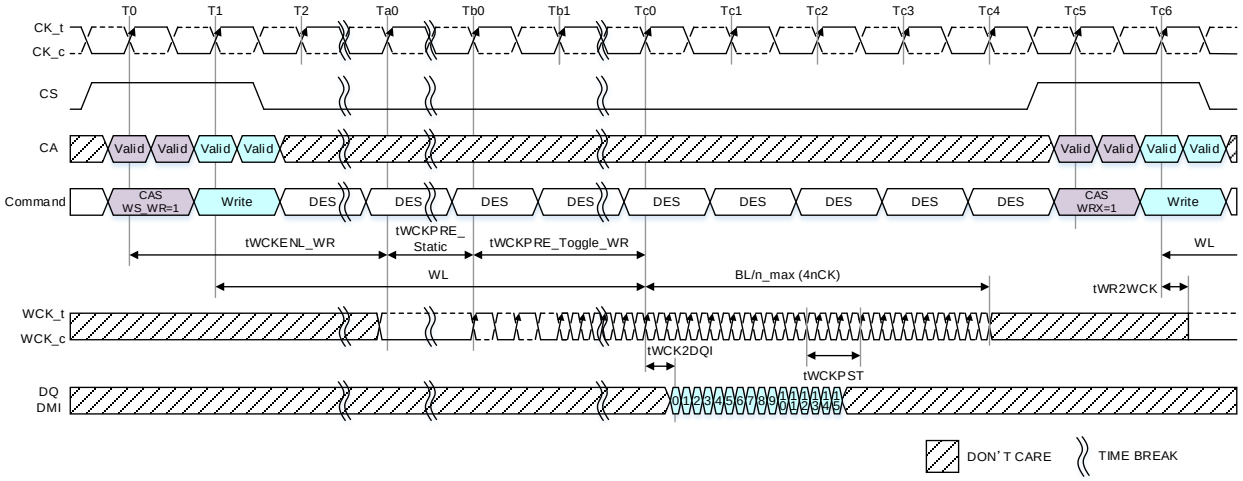


NOTE 1 tWCK2CK is 0ps in this instance.
NOTE 2 The end of both WL and tWCKPRE_Toggle_WR are the same timing in this instance.
NOTE 3 WCK2CK sync is expired on Tc4.
NOTE 4 CAS_WRX command is inhibited on Tc4.
NOTE 5 CAS WRX command can be issued after Tc5 (Tc5 is included).
NOTE 4 tWCKPST=2.5nWCK, RD(tWCKPST/tCK)=0.

**Figure 220 – CAS_WRX Command timing after WCK2CK sync state is expired**

**Table 281 – AC Timing**

| Parameter | Symbol | Min/Max | Value | Unit | Notes |
|---|---|---|---|---|---|
| Valid WCK Requirement after Write w/ Write X | tWR2WCK | Max | 1.25 | ns | - |

### 7.7.4 Post Package Repair (PPR)

The repair process is irrevocable so great care should be exercised when using. At Post Package Repair, the fail row address to fix is required to designate using 8B mode addressing. With PPR, LPDDR5 SDRAM can correct 1 Row per bank. When PPR is executed in the BG or 16B mode, refer to the address mapping in Bank Architecture section. The controller should prevent unintended PPR mode entry and repair.
The availability of PPR for each bank [7:0] is readable via MR29 OP[7:0] respectively.

**Table 282 - MR29 OP[7:0] Register Information**

| Function | Register Type | Operand | Data | Notes |
|---|---|---|---|---|
| PPR Resource Bank 0 | Read-only | MR29 OP[0] | $0_B$: PPR Resource is not available<br>$1_B$: PPR Resource is available | |
| PPR Resource Bank 1 | | MR29 OP[1] | $0_B$: PPR Resource is not available<br>$1_B$: PPR Resource is available | |
| PPR Resource Bank 2 | | MR29 OP[2] | $0_B$: PPR Resource is not available<br>$1_B$: PPR Resource is available | |
| PPR Resource Bank 3 | | MR29 OP[3] | $0_B$: PPR Resource is not available<br>$1_B$: PPR Resource is available | |
| PPR Resource Bank 4 | | MR29 OP[4] | $0_B$: PPR Resource is not available<br>$1_B$: PPR Resource is available | |
| PPR Resource Bank 5 | | MR29 OP[5] | $0_B$: PPR Resource is not available<br>$1_B$: PPR Resource is available | |
| PPR Resource Bank 6 | | MR29 OP[6] | $0_B$: PPR Resource is not available<br>$1_B$: PPR Resource is available | |
| PPR Resource Bank 7 | | MR29 OP[7] | $0_B$: PPR Resource is not available<br>$1_B$: PPR Resource is available | |

The "bank address" is specified by CA[0:2] during the Activate command and is valid for a single PPR sequence. Valid combination for 8B mode includes CA[0:2]=$000_B$, $001_B$, $010_B$, $011_B$, $100_B$, $101_B$, $110_B$ and $111_B$. And CA[3] is required to be V (valid).
The BG/Bank address mapping on PPR is shown in Table 2.

**Table 283 - Combination of PPR Resource for CA Input**

| CA Input at ACT command | | | | 8B Mode | BG Mode | | 16B Mode |
|---|---|---|---|---|---|---|---|
| CA0 | CA1 | CA2 | CA3 | Bank | BG | Bank | Bank |
| 0 | 0 | 0 | V | 0 | 0,2 | 0 | 0,8 |
| 1 | 0 | 0 | V | 1 | 0,2 | 1 | 1,9 |
| 0 | 1 | 0 | V | 2 | 0,2 | 2 | 2,10 |
| 1 | 1 | 0 | V | 3 | 0,2 | 3 | 3,11 |
| 0 | 0 | 1 | V | 4 | 1,3 | 0 | 4,12 |
| 1 | 0 | 1 | V | 5 | 1,3 | 1 | 5,13 |
| 0 | 1 | 1 | V | 6 | 1,3 | 2 | 6,14 |
| 1 | 1 | 1 | V | 7 | 1,3 | 3 | 7,15 |

### 7.7.4.1 Guard Key Protection

Entry into PPR is protected through a sequential MRS guard key to prevent unintentional PPR programming. The PPR guard key requires a sequence of four MRW commands to be issued immediately after entering PPR, as shown in Figure 1. The guard key sequence is entered in the specified order as stated below, and shown inTable 3. Any interruptions of the guard key sequence by other MRW/MRR commands or non-MR commands such as ACT, WR, RD, REFab and REFpb are not allowed. Since interruption of the guard key entry is not allowed, if the guard key is not entered in the required order or is interrupted by other commands intentionally, it should be asserted Reset_n, and then to do the reset and initialization procedure immediately. If the guard key is not entered in the required order or an incorrect guard key is entered unintentionally, the SDRAM will capture the wrong guard key and PPR mode will not execute. Even in this case, asserting Reset_n, and then to do the reset and initialization procedure is required at the end of PPR procedure. The SDRAM does not provide an error indication if an incorrect PPR guard key sequence is entered.

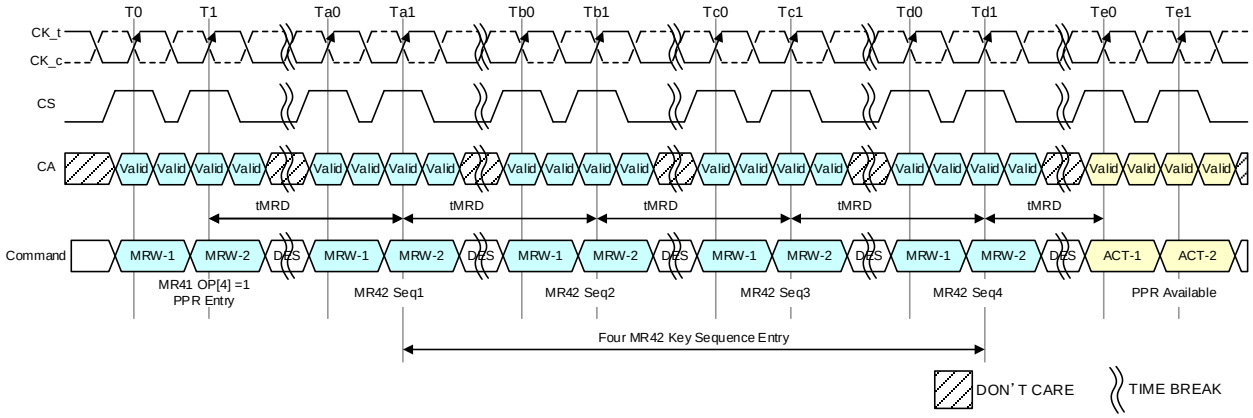


NOTE 1 Only DES commands are allowed during tMRD.

**Figure 221 - Guard Key Timing Diagram**

**Table 284 - Guard Key Encoding for MR42**

| Command | OP7 | OP6 | OP5 | OP4 | OP3 | OP2 | OP1 | OP0 |
|---|---|---|---|---|---|---|---|---|
| MR42 Seq1 | 1 | 1 | 0 | 0 | 1 | 1 | 1 | 1 |
| MR42 Seq2 | 0 | 1 | 1 | 1 | 0 | 0 | 1 | 1 |
| MR42 Seq3 | 1 | 0 | 1 | 1 | 1 | 0 | 1 | 1 |
| MR42 Seq4 | 0 | 0 | 1 | 1 | 1 | 0 | 1 | 1 |

### 7.7.4.2 PPR Fail Row Address Repair

Once PPR mode is entered by setting MR41 OP[4]=1 (enable) and issuing the guard key sequence, the ACT command is used to transmit the bank and row address of the row to be repaired in SDRAM. The specific steps of PPR are as follows.

The following is procedure of PPR.

1. Before entering PPR mode, All banks are required to be Precharged and idle state and WCK Sync. is expired, or WCK Sync. is off intentionally.
2. Enable PPR using MR41 OP[4]=1 and wait tMRD.
3. Issue the guard key as four consecutive MR42 OP[7:0] MRW commands each with a unique address field OP[7:0]. Each MRW command should be spaced by tMRD.
4. Issue an ACT command with the Bank Group, Bank and Row fail address.
5. Wait tPGM to allow the SDRAM to repair target Row Address internally then issue PRE.
6. Wait tPGM_Exit after PRE which allows the SDRAM to recognize repaired Row address RAn.
7. Exit PPR by setting MR41 OP[4]=0 and wait tPGMPST.
8. Assert Reset_n, and then to do the reset and initialization procedure.
9. In more than one fail address repair case, Repeat Step 2 to 8

After entering PPR mode, do not deviate from the above-mentioned procedure. It is prohibited to insert any other command except DES between step 3 and step 8. The PPR procedure is required to be performed at a clock frequency of 800MHz or less, the frequency for PPR mode is defined as tCKPGM.
Once PPR mode is exited, the controller can verify that the target row was repaired by writing data into the target row and reading it back after reset and initialization procedure.

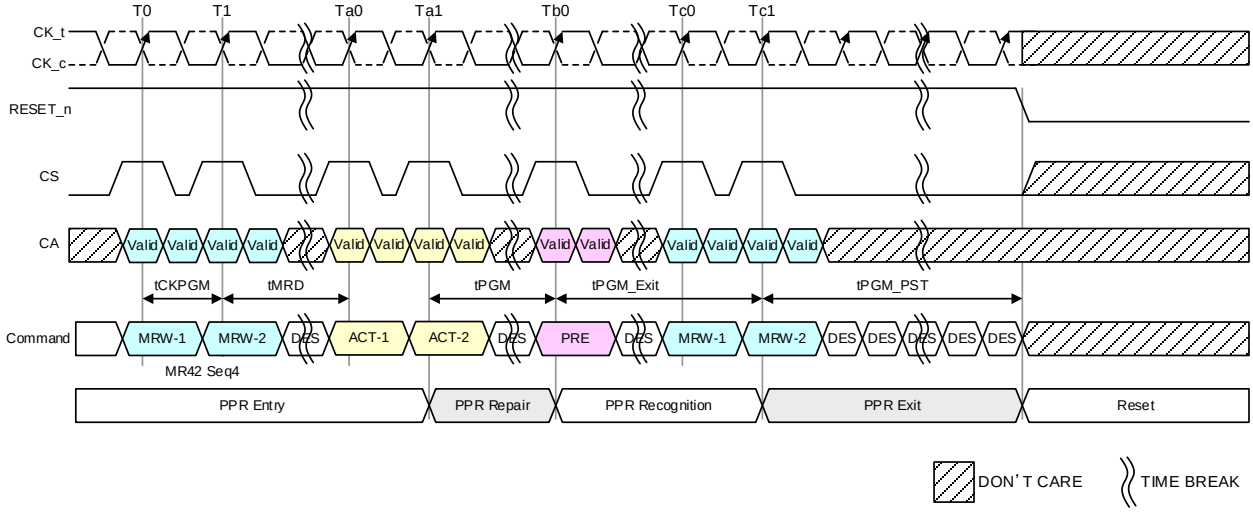


NOTE 1 With one PPR command, only one row can be repaired at one time per die.
NOTE 2 RESET is required at the end of every PPR procedure.
NOTE 3 During PPR, memory contents are not refreshed and may be lost.
NOTE 4 Assert Reset_n: Refer to the Reset, Power-up, Initialization and Power-off Procedure section for details.

**Figure 222 - PPR Timing**

**Table 285 - PPR Timing Parameters**

| Parameter | Symbol | min | max | Unit | Notes |
|---|---|---|---|---|---|
| PPR Programming Clock | tCKPGM | 1.25 | 200 | ns | |
| PPR Programming Time | tPGM | 2000 | - | ms | |
| PPR Exit Time | tPGM Exit | 15 | - | ns | |
| New Address Setting time | tPGMPST | 500 | - | us | |

### 7.7.5 Refresh Management Command

#### 7.7.5.1 Refresh Management Command Definition

Periods of high LPDDR5 SDRAM activity may require additional REFRESH commands to protect the integrity of the SDRAM data. LPDDR5 devices that require additional activity based refreshes include support for an Activation-based refresh management (RFM) command. The LPDRAM will indicate the requirement for additional Refresh Management (RFM) by setting read only MR27 opcode bit 0 (Table 5). OP[0]=0 indicates no additional refresh management is needed beyond the requirement in the Refresh section of the specification. OP[0]=1 indicates additional LPDRAM refresh management is required.

A suggested implementation of Refresh Management by the controller monitors ACT commands issued per bank to the LPDRAM. This activity can be monitored as a Rolling Accumulated ACT (RAA) count. Each ACT command will increment the RAA count by 1 for the individual bank receiving the ACT command.

When the RAA counter reaches a DRAM vendor-specified Initial Management Threshold (RAAIMT), which is set by the DRAM vendor in the read only MR27 opcode bits 5:1 (Table 5), additional LPDRAM refresh management may be required. Executing the Refresh Management (RFM) command allows additional time for the LPDRAM to manage refresh internally. The RFM operation can be initiated to all banks on the LPDRAM with the RFMab command, or to a single bank with the RFMpb command.

The RFM command bits are the same as the REF command, except for CA3. If the Refresh Management Required bit is “0”, (MR27 OP[0]=0), the state of CA3 will be ignored. If the Refresh Management Required bit is “1”, (MR27 OP[0]=1), CA3=”L” executes the REF command and CA3=”H” executes either a RFMab command if CA6=”H” or a RFMpb command if CA6=”L”.

**Table 286 LPDDR5 REFRESH Command with RFM**

<table>
<tr><th rowspan="2">CMD</th><th rowspan="2">Bank Org</th><th rowspan="2">SDR CS Pin</th><th colspan="7">DDR Command/Address Pins</th><th>CK Edge</th></tr>
<tr><th>CA0</th><th>CA1</th><th>CA2</th><th>CA3</th><th>CA4</th><th>CA5</th><th>CA6</th><th></th></tr>
<tr><td rowspan="4">Refresh</td><td>Any</td><td>H</td><td>L</td><td>L</td><td>L</td><td>H</td><td>H</td><td>H</td><td>L</td><td>R1</td></tr>
<tr><td>BG</td><td rowspan="3">X</td><td rowspan="3">BA0</td><td rowspan="3">BA1</td><td>BG0</td><td rowspan="3">RFM</td><td rowspan="2">SB0</td><td rowspan="2">V</td><td rowspan="3">AB</td><td rowspan="3">F1</td></tr>
<tr><td>16B</td><td rowspan="2">BA2</td></tr>
<tr><td>8B</td><td>V</td><td>SB1</td></tr>
</table>

NOTE 1 CA3 F1 edge is 'V' when RFM is not required, but becomes 'RFM' when read-only MR27 OP[0]=1b.

NOTE 2 Issuing the RFMpb or RFMab command allows the LPDDR5 to use the command period for additional Refresh Management.

NOTE 3 CA4 F1 edge is ‘V’ when RFM is not required, or when RFMSBC is set to ‘1’. SB0 is always treated as ‘V’ for REFpb and REFab commands.

NOTE 4 CA5 F1 edge is ‘V’ when RFM is not required, or when RFMSBC is set to ‘1’ or ‘2’. SB1 is always treated as ‘V’ for REFpb and REFab commands.

**Table 287 Refresh Management Parameters**

| Refresh Requirements | Symbol | 2Gb | 3Gb | 4Gb | 6Gb | 8Gb | 12Gb | 16Gb | 24Gb | 32Gb | Units |
|---|---|---|---|---|---|---|---|---|---|---|---|
| Refresh Management Sycle time (All Bank) | tRFMab | TBD | TBD | TBD | TBD | 210 | 280 | 280 | TBD | TBD | ns |
| Refresh Management Sycle time (per Bank) | tRFMpb | TBD | TBD | TBD | TBD | 170 | 190 | 190 | TBD | TBD | ns |

When an RFM command is issued to the LPDRAM, the RAA counter in any bank receiving the command can be decremented. The decrease in RAA count for an RFM command is determined by the RAAIMT multiplier value RAADEC, set by MR57 OP[1:0], as shown in Table 3. Issuing a RFMab command allows the RAA count in all banks to be decremented by the RAAIMT multiplied by the RAADEC value. Issuing an RFMpb command with BA[1:0] and either BA[2] or BG[0] allows the RAA count only for the bank specified by BA[1:0] and either BA[2] or BG[0] (depending on bank organization) to be decremented by RAAIMT * RAADEC.

The RAA counter can only be decremented to a minimum RAA value of 0. No negative RAA value, or “pull-in” of RFM commands, is allowed.

RFM commands are allowed to accumulate or “postpone”, but the RAA counter shall never exceed the vendor specified RAA Maximum Management Threshold (RAAMMT), which is determined by multiplying the RAAIMT value by the RAAMULT value set by the DRAM vendor in read only MR27 OP[7:6] (Table 5). If the RAA counter for a bank reaches RAAMMT, no additional ACT commands are allowed to that LPDRAM bank until one or more REF or RFM commands have been issued to reduce the RAA counter below the maximum value.

RFM command scheduling shall meet the same minimum separation requirements as those for the REF command.

A RFM command does not replace the requirement for the controller to issue periodic REF commands to the LPDRAM. The RFM commands are supplemental time for the LPDRAM to manage refresh internally. Issuing a REF command allows the RAA counter to be decremented by RAAIMT for the bank or banks being refreshed. Hence, any periodic REF command issued to the LPDRAM allows the RAA counter of the banks being refreshed to be decremented by the RAAIMT value. This would nominally occur once every tREFIe. Issuing a REFab command allows the RAA count in all banks to be decremented. Issuing a REFpb command with a bank address allows the RAA count only with that bank address to be decremented. No decrement to the RAA count values is allowed for entering/exiting Self Refresh. The per bank count values before Self Refresh is entered will be the same upon Self Refresh exit.

Issuing an RFM command also allows decrementing of the RAA counter.

Devices which require Refresh Management may not require RFM at every refresh rate multiplier. The Refresh Management Threshold value RFMTH defines a refresh interval (tREFIe) above which Refresh Management is required. RFMTH is determined by the equation:

RFMTH = RAAIMT * tRC absolute min

Maximum interval between two REFab without RFM requirement is defined with following formula “tREFIe ≤ RFMTH.” When RFMTH is longer than tREFIe interval between two REFab defined in Table 209 “REFRESH Command Timing Constraints,” no RFM command is required even using max pull-in and postpone.

Operation at any refresh rate slower (i.e. longer tREFIe) than that indicated by RFMTH requires RFM to ensure integrity of data stored in the LPDRAM. Operation at the tREFIe indicated by RFMTH, or operation at any higher refresh rate (i.e. shorter tREFIe) is exempt from RFM requirements regardless of any RAA count value.

A controller Refresh Management implementation may also monitor ACT commands issued on a sub-bank basis when allowed by the LPDRAM. Because monitoring by sub-banks does not change the management threshold values, this can reduce the performance impact by reducing the number of required RFM commands when row accesses are distributed among sub-banks. LPDRAM support for sub-bank monitoring, and the number of sub-banks supported, is indicated by MR57 OP[3:2] RFMSB. If sub-bank monitoring is implemented by the memory controller, the corresponding MR57 OP[5:4] RFMSBC bits shall be set as shown in Table 7. It is illegal to program RFMSBC to a value higher than indicated by RFMSB.

When RFMSB is greater than 1 the monitoring of ACT commands may be performed by dividing the row address space equally among the indicated number of regions. An example where RFMSB=2 is shown in Figure 1. In this example, the controller would be permitted to implement two RAA counters for each LPDRAM bank, one each for regions 0 and 1. In this implementation the requirements for RFM commands are determined for each region separately, based on the same read-only LPDRAM parameters RAAIMT, RAAMULT, and RAADEC as a per-bank implementation. Decrementing of the RAA counter for each sub-bank region follows the same rules as decrementing the RAA counter on a per-bank basis. When RAA is tracked on a per-sub-bank basis, RFM commands must include the appropriate SB0 and SB1 bits to inform the DRAM which sub-bank requires the additional Refresh Management. When an RFMab command is issued and sub-bank management is enabled (i.e. MR57 OP[5:4] = 01b or 10b), the command will apply to the sub-bank indicated by the SB0 and SB1 bit states for each of the eight Refresh banks. That is, the RAA counter may be decremented for the same sub-bank region in each of the eight Refresh banks for an RFMab command. If the RAA counter for any sub-bank region within a bank reaches RAAMMT, no additional ACT commands are allowed to that LPDRAM bank until one or more REF or RFM commands have been issued to reduce the RAA counter below the maximum value for all sub-bank regions. Some examples of sub-bank RAA count behavior are shown in Table 7.

Monitoring of the sub-bank regions is optional for the controller, and the sub-bank regions may be combined, i.e. if an LPDRAM device supports 2 regions as in Figure 1 the controller could choose to regions 0 and regions 1. In this case there would be two RAA monitors per bank, one tracking addresses 00 – 7F and another tracking addresses 80 - FF. Since sub-bank implementation is optional the RFM specification is also met if all sub-bank regions are tracked together as a single bank.

Sub Bank usage and RAA counter configuration for each bank organization.

BG mode and 16B mode

Number of RAA counter andSB0 / SB1 are defined as Table 288.

**Table 288 BG mode and 16B mode SB0/1 definition**

| RAA Counter in SoC | RAA Granularity per Ch per Rank | RFM Operation | Refresh Command Operands |
|---|---|---|---|
| One RAA Counter per two banks | 1 of 8 | Two banks RFM operation | BA0, BA1, BG0: Valid<br>SB0, SB1: high or low |
| One RAA Counter per one bank | 1 of 16 | One bank RFM operation | BA0, BA1, BG0, SB0 : Valid<br>SB1: high or low |

**Table 289 BG MODE AND 16B MODE bank address and sub-bank relationship when MR57 OP[5:4]=01b**

| BG mode Active operation | BA0 | BA1 | BG0 | BG1 |
|---|---|---|---|---|
| 16B mode Active operation | BA0 | BA1 | BA2 | BA3 |
| RFM operation | BA0 | BA1 | BG0 | SB0 |

8Bank mode

Number of RAA counter andSB0 / SB1 are defined as Table 290.

**Table 290 8B mode SB0/1 definition**

| RAA Counter in SoC | RAA Granularity per Ch per Rank | RFM Operation | Refresh Command Operands |
|---|---|---|---|
| One RAA Counter per one bank | 1 of 8 | One banks RFM operation | BA0, BA1, BG0: Valid<br>SB0, SB1: high or low |
| One RAA Counter per sub-bank | 1 of 16 | One sub-bank RFM operation | BA0, BA1, BG0, SB1: Valid<br>SB0: high or low |

SB1 addressing table (x16 mode)

| Memory Density | 2Gb | 3Gb | 4Gb | 6Gb | 8Gb | 12Gb | 16Gb | 24Gb | 32Gb |
|---|---|---|---|---|---|---|---|---|---|
| Configuration | 16Mb x 16DQ x 8 banks | 24Mb x 16DQ x 8 banks | 32Mb x 16DQ x 8 banks | 48Mb x 16DQ x 8 banks | 64Mb x 16DQ x 8 banks | 96Mb x 16DQ x 8 banks | 128Mb x 16DQ x 8 banks | 192Mb x 16DQ x 8 banks | 256Mb x 16DQ x 8 banks |
| Bank Address | BA0 - BA2 | BA0 - BA2 | BA0 - BA2 | BA0 - BA2 | BA0 - BA2 | BA0 - BA2 | BA0 - BA2 | BA0 - BA2 | BA0 - BA2 |
| Row Addresses | R0 - R12 | R0-R13 (R12=0 when R13=1) | R0- R13 | R0-R14 (R13=0 when R14=1) | R0- R14 | R0-R15 (R14=0 when R15=1) | R0- R15 | R0-R16 (R15=0 when R16=1) | R0 - R16 |
| SB1=0 | R12=0 | R13/R12 /R11 =000, 001, 010 | R13=0 | R14/R12 /R12 =000, 001, 010 | R14=0 | R15/R14 /R13 =000, 001, 010 | R15=0 | R16/R15 /R14 =000, 001, 010 | R16=0 |
| SB1=1 | R12=1 | R13/R12 /R11 =011, 100, 101 | R13=1 | R14/R13 /R12 =011, 100, 101 | R14=1 | R15/R14 /R13 =011, 100, 101 | R15=1 | R16/R15 /R14 =011, 100, 101 | R16=1 |

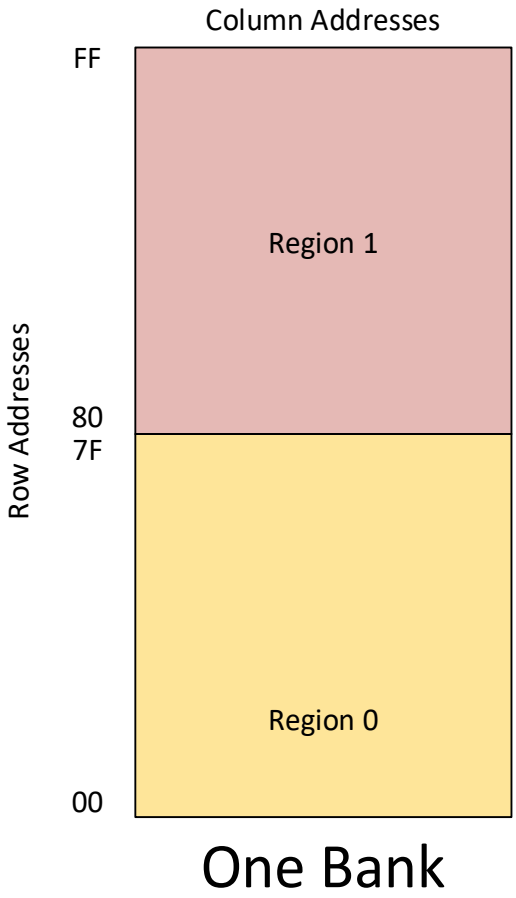


**Figure 223 Sub-Bank Addressing Example**

**Table 291 8B mode Sub-Bank Addressing Table for 2 Region**

| x16 | | | | |
|---|---|---|---|---|
| Density | Region | RA range min | RA range max | Note |
| 2Gb | 0 | $0_H$ | $FFF_H$ | |
| | 1 | $1000_H$ | $1FFF_H$ | |
| 3Gb | 0 | $0_H$ | $17FF_H$ | |
| | 1 | $1800_H$ | $2FFF_H$ | |
| 4Gb | 0 | $0_H$ | $1FFF_H$ | |
| | 1 | $2000_H$ | $3FFF_H$ | |
| 6Gb | 0 | $0_H$ | $2FFF_H$ | |
| | 1 | $3000_H$ | $5FFF_H$ | |
| 8Gb | 0 | $0_H$ | $3FFF_H$ | |
| | 1 | $4000_H$ | $7FFF_H$ | |
| 12Gb | 0 | $0_H$ | $5FFF_H$ | |
| | 1 | $6000_H$ | $BFFF_H$ | |
| 16Gb | 0 | $0_H$ | $7FFF_H$ | |
| | 1 | $8000_H$ | $FFFF_H$ | |
| 24Gb | 0 | $0_H$ | $BFFF_H$ | |
| | 1 | $C000_H$ | $17FFF_H$ | |
| 32Gb | 0 | $0_H$ | $FFFF_H$ | |
| | 1 | $10000_H$ | $1FFFF_H$ | |
| X8 | | | | |
| Density | Region | RA range min | RA range max | Note |
| 2Gb | 0 | $0_H$ | $1FFF_H$ | |
| | 1 | $2000_H$ | $3FFF_H$ | |
| 3Gb | 0 | $0_H$ | $2FFF_H$ | |
| | 1 | $3000_H$ | $5FFF_H$ | |
| 4Gb | 0 | $0_H$ | $3FFF_H$ | |
| | 1 | $4000_H$ | $7FFF_H$ | |
| 6Gb | 0 | $0_H$ | $5FFF_H$ | |
| | 1 | $6000_H$ | $BFFF_H$ | |
| 8Gb | 0 | $0_H$ | $7FFF_H$ | |
| | 1 | $8000_H$ | $FFFF_H$ | |
| 12Gb | 0 | $0_H$ | $BFFF_H$ | |
| | 1 | $C000_H$ | $17FFF_H$ | |
| 16Gb | 0 | $0_H$ | $FFFF_H$ | |
| | 1 | $10000_H$ | $1FFFF_H$ | |
| 24Gb | 0 | $0_H$ | $17FFF_H$ | |
| | 1 | $18000_H$ | $2FFFF_H$ | |
| 32Gb | 0 | $0_H$ | $1FFFF_H$ | |
| | 1 | $20000_H$ | $3FFFF_H$ | |

**Table 292 MR57 Device Feature (MA[5:0]=39H)**

| OP[7] | OP[6] | OP[5] | OP[4] | OP[3] | OP[2] | OP[1] | OP[0] |
|---|---|---|---|---|---|---|---|
| RFU | | RFMSBC | | RFMSB | | RAADEC | |

**Table 293 MR57 Definitions**

| Function | Register Type | Operand | Data | Notes |
|---|---|---|---|---|
| RAADEC ( RAA Count Decrement per RFM Command ) | Read | OP[1:0] | 00b: RAAIMT<br>01b: RAAIMT*1.5<br>10b: RAAIMT*2<br>11b: RAAIMT*4 | |
| RFMSB ( RFM Allowable Sub-banks ) | Read | OP[3:2] | 00b: 1<br>01b: 2<br>10b: RFU<br>11b: RFU | |
| RFMSBC ( RFM Sub-bank Counters Implemented ) | Write | OP[5:4] | 00b: 1 (default)<br>01b: 2<br>10b: RFU<br>11b: RFU | |

**Table 294 MR27 Device Feature (MA[5:0]=1BH)**

| OP[7] | OP[6] | OP[5] | OP[4] | OP[3] | OP[2] | OP[1] | OP[0] |
|---|---|---|---|---|---|---|---|
| RAAMULT | | RAAIMT | | | | | RFM |

**Table 295 MR27 Definitions**

| Function | Register Type | Operand | Data | Notes |
|---|---|---|---|---|
| RFM ( RFM Required) | Read | OP[0] | 0b: RFM not required<br>1b: RFM required | 1 |
| RAAIMT ( Rolling Accumulated ACT Initial Management Threshold ) | Read | OP[5:1] | 00000b: Invalid<br>00001b: 8<br>00010b: 16<br>.... (step +8)<br>11110b: 240<br>11111b: 248 | 1 |
| RAAMULT<br>(Rolling Accumulated ACT Multiplier ) | Read | OP[7:6] | 00: 2X<br>01: 4X<br>10: 6X<br>11b: 8X | 1, 2 |
| Notes 1. Vendor programmed, no need to periodical read.<br>Notes 2. RAAMMT = RAAMULT * RAAIMT | | | | |

## Refresh Management Examples

Following are some operation examples to aid in understanding of the Refresh Management function. Values shown are hypothetical and may not represent values from any actual LPDDR5 SDRAM device now or in the future.

**Table 296 RFM Operation Examples (one bank, one sub-bank region)**

| Device-Specific RFM Requirements | | | | | Current Device State | | Operating Requirements |
|---|---|---|---|---|---|---|---|
| RAAIMT | RAAMULT | RAADEC | RFMSB | RFMTH | tREFIe | RAA | |
| 160 | 4x | 2x | 1 | 9600ns (160*60ns) | 7.8us | 120 | No additional commands required, RAA<RAAIMT and tREFIe≤RFMTH |
| 160 | 4x | 2x | 1 | 9600ns | 7.8us | 500 | No additional commands required, tREFIe≤RFMTH |
| 160 | 4x | 2x | 1 | 9600ns | 15.6us | 120 | No additional commands required, RAA<RAAIMT |
| 160 | 4x | 2x | 1 | 9600ns | 15.6us | 500 | No additional commands required immediately since RAA<RAAMMT, but RAA is approaching RAAMMT so one or more RFM commands to this bank are recommended to prevent interruption of operation |
| 160 | 4x | 2x | 1 | 9600ns | 15.6us | 640 | RFM or REF command to this bank required before any activate command to this bank is legal, since RAA=RAAMMT. Issuing one RFMpb or RFMab command will reduce RAA to 320 since RAADEC=2x. Issuing one REFpb or REFab command will reduce RAA to 480. |
| 120 | 4x | 1.5x | 1 | 7200ns | 7.8us | 480 | RFM or REF command to this bank required before any activate command to this bank is legal, since RAA=RAAMMT. Issuing one RFMpb or RFMab command will reduce RAA to 300 since RAADEC=1.5x. Issuing one REFpb or REFab command will reduce RAA to 360. |

**Table 297 RFM Operation Examples (one bank, various sub-bank configurations)**

| Device-Specific RFM Requirements | | | | | Current Device State | | Operating Requirements |
|---|---|---|---|---|---|---|---|
| RAAIMT | RAAMULT | RAADEC | RFMSB / RFMSBC | RFMTH | tREFIe | RAA | |
| 160 | 4x | 2x | 2/2 | 9600ns | 15.6us | Region 0 = 640 | RFM or REF command to this bank, region 0, is required before any activate command to this bank is legal, since RAA=RAAMMT in at least one region. Issuing one RFMpb or RFMab command with SB0=0 will reduce RAA for region 0 to 320 since RAADEC=2x. Issuing one REFpb or REFab command will reduce RAA for region 0 to 480. Region 1 RAA will remain at 0. |
| | | | | | | Region 1 = 0 | |
| 160 | 4x | 2x | 2/2 | 9600ns | 15.6us | Region 0 = 320 | No additional commands required immediately since RAA<RAAMMT for both regions. Issuing two RFMpb or RFMab commands (one to each region of this bank) would reduce RAA to 0 for both regions. Issuing one REFpb or REFab command will reduce RAA to 160 for both regions. |
| | | | | | | Region 1 = 320 | |

### 7.7.6 Decision Feedback Equalization (DFE)

LPDDR5 support very high data rate. To compensate channel characteristics, equalization technique helps Rx margin. DFE can be enabled when WCK is higher than 800MHz.

LPDDR5 provide Decision Feedback Equalization (DFE) capability for DQ Rx. LPDDR5 DFE is enabled by MR24 OP[2:0] for lower byte and MR24 OP[6:4] for upper byte. LPDDR5 supports only 1 tap negative feedback. DFE quantity can be controlled by MR24 OP[2:0] for lower byte and MR24 OP[6:4] for upper byte with seven steps. LPDDR5 can support different feedback quantity for each byte.

DFE is optional feature.

Before write data burst operation, LPDDR5 with DFE enabled requires 2UI DQ pre-drive to 0. This pre-drive set precondition of DFE circuits. In case of back to back write, there is no need to add pre-drive.

### 7.7.6 Decision Feedback Equalization (DFE) (Cont'd)

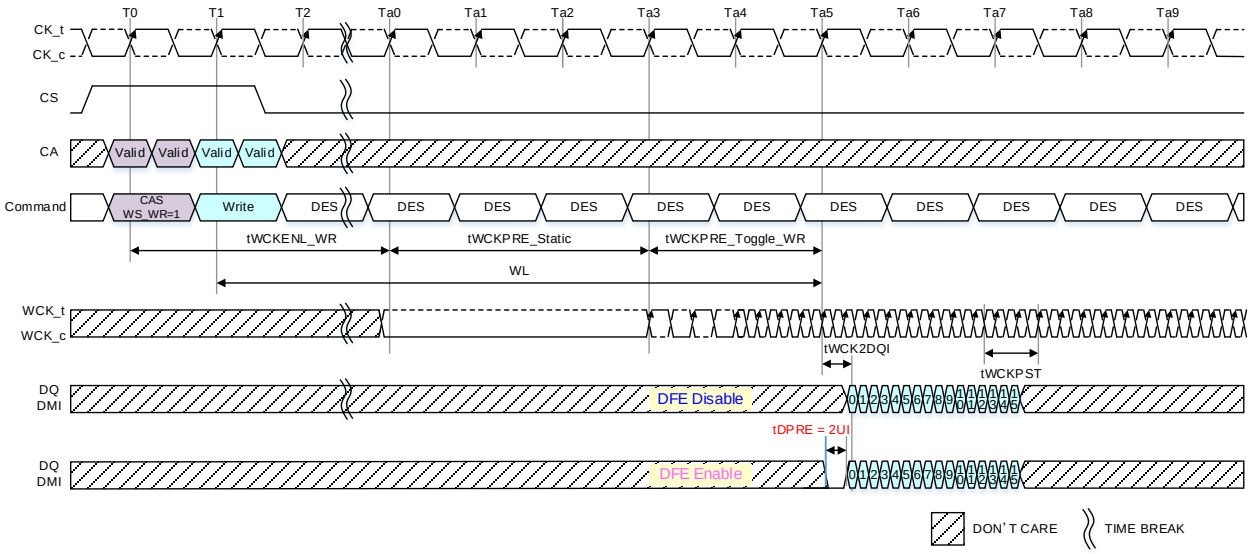


NOTE 1 tWCK2CK is 0ps in this instance.
NOTE 2 The end of both WL and tWCKPRE_Toggle_WR are the same timing in this instance
NOTE 3 Data Rate: 3733Mbps, tWCKPRE _Static: 3nCK, tWCKPRE toggle_WR: 2nCK

**Figure 224 — DFE pre-drive requirement**

### 7.7.7 Link ECC

Supporting Link ECC is an optional feature. In addition, DRAMs which support Link ECC need not do so at WCK frequencies less than or equal to 1600MHz. If supported by the DRAM, Link ECC may then be enabled or disabled by the controller as required by the system configuration, operating speed, or other requirements.

During each Write burst when Link ECC is enabled, ECC will be generated and checked across the 128 Data bits within a specified portion of the burst. ECC will be separately generated and checked across the 16 DMI bits within the same specified portion of the burst. In the case of the data ECC, the DBI encoded data must be used, as Masked Writes can modify the data in a way which changes the ECC.

This ECC (6 bits on DMI + 9 bits on the data) would be received by the DRAM on the RDQS_t pin along with Write Data on the DQ pins and DBI/DM on the DMI pin as illustrated in the Write command diagram below.

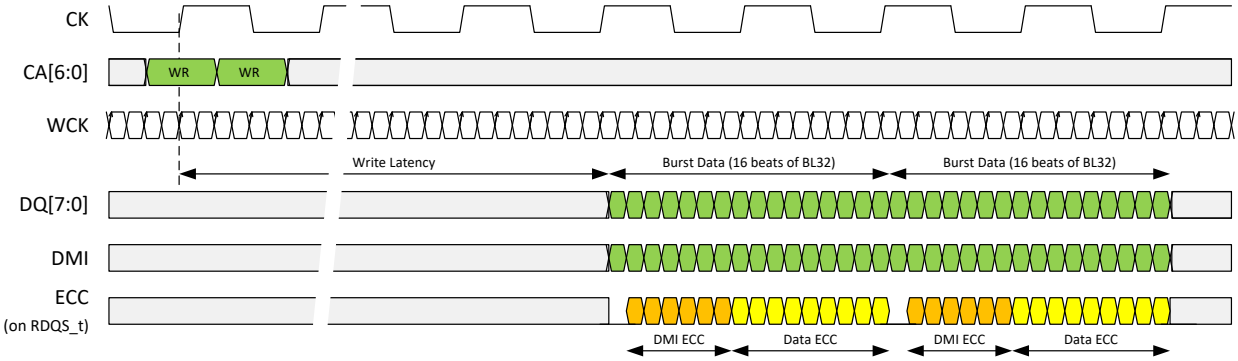


**Figure 225 - Write command showing link ECC transfer**

During each Read burst when Link ECC is enabled, ECC will be generated across the 128 Data bits in a specified portion of the burst. Since Link ECC and Read DBI are mutually exclusive, there is no need to calculate ECC across the DBI bits in the Read case. CAS (B3) is required to be “0” at read command when Read Link ECC is enabled.

This ECC (9 bits on the data only) would be transmitted from the DRAM on the DMI pin along with Read Data on the DQ pins as illustrated in the Read Command diagram below. Link ECC and the Read Data Copy function are mutually exclusive, since both drive information on DMI, and would conflict if both functions were enabled simultaneously.

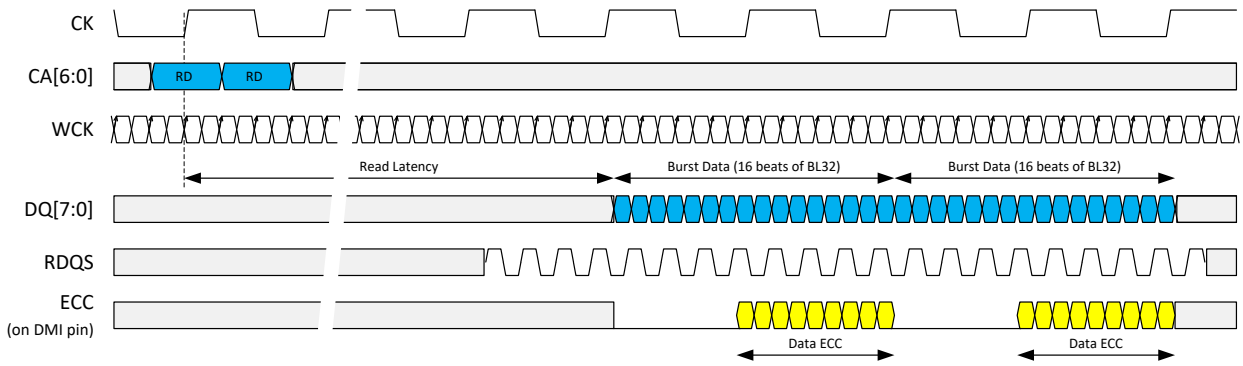


**Figure 226 - Read command showing Link ECC transfer**

A BL16 burst consists of 16 consecutive data beats; a BL32 burst consists of 32 consecutive beats. The ECC is calculated on 16-beat quantities of Data or DMI, so a BL32 burst has 2 separate sets of ECCs per burst per byte, one on the first 16 beats and another on the next 16 beats. A BL16 burst has only 1 set per burst per byte. A set of ECCs refers to all 15 ECC bits on a Write or the 9 ECC bits on a Read.

Link ECC is also calculated on each byte of the interface independently. So BL16 on a full 16-bit DRAM channel includes 2 sets of ECCs, and BL32 on a full DRAM channel includes a total of 4 sets.

The ECC check matrix for the LPDDR5 Data ECC is defined below.

**Table 298 - ECC Check Matrix for Data**

| Beat | 0 | | | | | | | | 1 | | | | | | | | 2 | | | | | | | | 3 | | | | | | | | 4 | | | | | | | | 5 | | | | | | | |
|---|---|---|---|---|---|---|---|---|---|---|---|---|---|---|---|---|---|---|---|---|---|---|---|---|---|---|---|---|---|---|---|---|---|---|---|---|---|---|---|---|---|---|---|---|---|---|---|---|
| DQ Pin | 0 | 1 | 2 | 3 | 4 | 5 | 6 | 7 | 0 | 1 | 2 | 3 | 4 | 5 | 6 | 7 | 0 | 1 | 2 | 3 | 4 | 5 | 6 | 7 | 0 | 1 | 2 | 3 | 4 | 5 | 6 | 7 | 0 | 1 | 2 | 3 | 4 | 5 | 6 | 7 | 0 | 1 | 2 | 3 | 4 | 5 | 6 | 7 |
| S0 | 0 | 1 | 0 | 1 | 0 | 1 | 0 | 1 | 0 | 1 | 0 | 1 | 0 | 1 | 0 | 1 | 0 | 1 | 0 | 1 | 0 | 1 | 0 | 1 | 0 | 1 | 0 | 1 | 0 | 1 | 0 | 1 | 0 | 1 | 0 | 1 | 0 | 1 | 0 | 1 | 0 | 1 | 0 | 1 | 0 | 1 | 0 | 1 |
| S1 | 0 | 0 | 1 | 1 | 0 | 0 | 1 | 1 | 0 | 0 | 1 | 1 | 0 | 0 | 1 | 1 | 0 | 0 | 1 | 1 | 0 | 0 | 1 | 1 | 0 | 0 | 1 | 1 | 0 | 0 | 1 | 1 | 0 | 0 | 1 | 1 | 0 | 0 | 1 | 1 | 0 | 0 | 1 | 1 | 0 | 0 | 1 | 1 |
| S2 | 0 | 0 | 0 | 0 | 1 | 1 | 1 | 1 | 0 | 0 | 0 | 0 | 1 | 1 | 1 | 1 | 0 | 0 | 0 | 0 | 1 | 1 | 1 | 1 | 0 | 0 | 0 | 0 | 1 | 1 | 1 | 1 | 0 | 0 | 0 | 0 | 1 | 1 | 1 | 1 | 0 | 0 | 0 | 0 | 1 | 1 | 1 | 1 |
| S3 | 1 | 1 | 1 | 1 | 1 | 1 | 1 | 1 | 0 | 0 | 0 | 0 | 0 | 0 | 0 | 0 | 1 | 1 | 1 | 1 | 1 | 1 | 1 | 1 | 0 | 0 | 0 | 0 | 0 | 0 | 0 | 0 | 0 | 0 | 0 | 0 | 0 | 0 | 0 | 0 | 1 | 1 | 1 | 1 | 1 | 1 | 1 | 1 |
| S4 | 1 | 1 | 1 | 1 | 1 | 1 | 1 | 1 | 0 | 0 | 0 | 0 | 0 | 0 | 0 | 0 | 0 | 0 | 0 | 0 | 0 | 0 | 0 | 0 | 1 | 1 | 1 | 1 | 1 | 1 | 1 | 1 | 1 | 1 | 1 | 1 | 1 | 1 | 1 | 1 | 0 | 0 | 0 | 0 | 0 | 0 | 0 | 0 |
| S5 | 0 | 0 | 0 | 0 | 0 | 0 | 0 | 0 | 1 | 1 | 1 | 1 | 1 | 1 | 1 | 1 | 1 | 1 | 1 | 1 | 1 | 1 | 1 | 1 | 0 | 0 | 0 | 0 | 0 | 0 | 0 | 0 | 1 | 1 | 1 | 1 | 1 | 1 | 1 | 1 | 0 | 0 | 0 | 0 | 0 | 0 | 0 | 0 |
| S6 | 0 | 0 | 0 | 0 | 0 | 0 | 0 | 0 | 1 | 1 | 1 | 1 | 1 | 1 | 1 | 1 | 0 | 0 | 0 | 0 | 0 | 0 | 0 | 0 | 1 | 1 | 1 | 1 | 1 | 1 | 1 | 1 | 0 | 0 | 0 | 0 | 0 | 0 | 0 | 0 | 1 | 1 | 1 | 1 | 1 | 1 | 1 | 1 |
| S7 | 0 | 0 | 0 | 0 | 0 | 0 | 0 | 0 | 1 | 1 | 1 | 1 | 1 | 1 | 1 | 1 | 0 | 0 | 0 | 0 | 0 | 0 | 0 | 0 | 1 | 1 | 1 | 1 | 1 | 1 | 1 | 1 | 0 | 0 | 0 | 0 | 0 | 0 | 0 | 0 | 1 | 1 | 1 | 1 | 1 | 1 | 1 | 1 |
| S8 | 1 | 1 | 1 | 1 | 1 | 1 | 1 | 1 | 1 | 1 | 1 | 1 | 1 | 1 | 1 | 1 | 1 | 1 | 1 | 1 | 1 | 1 | 1 | 1 | 1 | 1 | 1 | 1 | 1 | 1 | 1 | 1 | 1 | 1 | 1 | 1 | 1 | 1 | 1 | 1 | 1 | 1 | 1 | 1 | 1 | 1 | 1 | 1 |

| Beat | 6 | | | | | | | | 7 | | | | | | | | 8 | | | | | | | | 9 | | | | | | | | 10 | | | | | | | | 11 | | | | | | | |
|---|---|---|---|---|---|---|---|---|---|---|---|---|---|---|---|---|---|---|---|---|---|---|---|---|---|---|---|---|---|---|---|---|---|---|---|---|---|---|---|---|---|---|---|---|---|---|---|---|
| DQ Pin | 0 | 1 | 2 | 3 | 4 | 5 | 6 | 7 | 0 | 1 | 2 | 3 | 4 | 5 | 6 | 7 | 0 | 1 | 2 | 3 | 4 | 5 | 6 | 7 | 0 | 1 | 2 | 3 | 4 | 5 | 6 | 7 | 0 | 1 | 2 | 3 | 4 | 5 | 6 | 7 | 0 | 1 | 2 | 3 | 4 | 5 | 6 | 7 |
| S0 | 0 | 1 | 0 | 1 | 0 | 1 | 0 | 1 | 0 | 1 | 0 | 1 | 0 | 1 | 0 | 1 | 0 | 1 | 0 | 1 | 0 | 1 | 0 | 1 | 0 | 1 | 0 | 1 | 0 | 1 | 0 | 1 | 0 | 1 | 0 | 1 | 0 | 1 | 0 | 1 | 0 | 1 | 0 | 1 | 0 | 1 | 0 | 1 |
| S1 | 0 | 0 | 1 | 1 | 0 | 0 | 1 | 1 | 0 | 0 | 1 | 1 | 0 | 0 | 1 | 1 | 0 | 0 | 1 | 1 | 0 | 0 | 1 | 1 | 0 | 0 | 1 | 1 | 0 | 0 | 1 | 1 | 0 | 0 | 1 | 1 | 0 | 0 | 1 | 1 | 0 | 0 | 1 | 1 | 0 | 0 | 1 | 1 |
| S2 | 0 | 0 | 0 | 0 | 1 | 1 | 1 | 1 | 0 | 0 | 0 | 0 | 1 | 1 | 1 | 1 | 0 | 0 | 0 | 0 | 1 | 1 | 1 | 1 | 0 | 0 | 0 | 0 | 1 | 1 | 1 | 1 | 0 | 0 | 0 | 0 | 1 | 1 | 1 | 1 | 0 | 0 | 0 | 0 | 1 | 1 | 1 | 1 |
| S3 | 1 | 1 | 1 | 1 | 1 | 1 | 1 | 1 | 0 | 0 | 0 | 0 | 0 | 0 | 0 | 0 | 1 | 1 | 1 | 1 | 1 | 1 | 1 | 1 | 0 | 0 | 0 | 0 | 0 | 0 | 0 | 0 | 0 | 0 | 0 | 0 | 0 | 0 | 0 | 0 | 1 | 1 | 1 | 1 | 1 | 1 | 1 | 1 |
| S4 | 1 | 1 | 1 | 1 | 1 | 1 | 1 | 1 | 0 | 0 | 0 | 0 | 0 | 0 | 0 | 0 | 0 | 0 | 0 | 0 | 0 | 0 | 0 | 0 | 1 | 1 | 1 | 1 | 1 | 1 | 1 | 1 | 1 | 1 | 1 | 1 | 1 | 1 | 1 | 1 | 0 | 0 | 0 | 0 | 0 | 0 | 0 | 0 |
| S5 | 1 | 1 | 1 | 1 | 1 | 1 | 1 | 1 | 0 | 0 | 0 | 0 | 0 | 0 | 0 | 0 | 0 | 0 | 0 | 0 | 0 | 0 | 0 | 0 | 1 | 1 | 1 | 1 | 1 | 1 | 1 | 1 | 0 | 0 | 0 | 0 | 0 | 0 | 0 | 0 | 1 | 1 | 1 | 1 | 1 | 1 | 1 | 1 |
| S6 | 0 | 0 | 0 | 0 | 0 | 0 | 0 | 0 | 1 | 1 | 1 | 1 | 1 | 1 | 1 | 1 | 1 | 1 | 1 | 1 | 1 | 1 | 1 | 1 | 0 | 0 | 0 | 0 | 0 | 0 | 0 | 0 | 1 | 1 | 1 | 1 | 1 | 1 | 1 | 1 | 0 | 0 | 0 | 0 | 0 | 0 | 0 | 0 |
| S7 | 0 | 0 | 0 | 0 | 0 | 0 | 0 | 0 | 1 | 1 | 1 | 1 | 1 | 1 | 1 | 1 | 0 | 0 | 0 | 0 | 0 | 0 | 0 | 0 | 1 | 1 | 1 | 1 | 1 | 1 | 1 | 1 | 0 | 0 | 0 | 0 | 0 | 0 | 0 | 0 | 1 | 1 | 1 | 1 | 1 | 1 | 1 | 1 |
| S8 | 1 | 1 | 1 | 1 | 1 | 1 | 1 | 1 | 1 | 1 | 1 | 1 | 1 | 1 | 1 | 1 | 1 | 1 | 1 | 1 | 1 | 1 | 1 | 1 | 1 | 1 | 1 | 1 | 1 | 1 | 1 | 1 | 1 | 1 | 1 | 1 | 1 | 1 | 1 | 1 | 1 | 1 | 1 | 1 | 1 | 1 | 1 | 1 |

| Beat | 12 | | | | | | | | 13 | | | | | | | | 14 | | | | | | | | 15 | | | | | | | | Check Bit | | | | | | | |
|---|---|---|---|---|---|---|---|---|---|---|---|---|---|---|---|---|---|---|---|---|---|---|---|---|---|---|---|---|---|---|---|---|---|---|---|---|---|---|---|
| DQ Pin | 0 | 1 | 2 | 3 | 4 | 5 | 6 | 7 | 0 | 1 | 2 | 3 | 4 | 5 | 6 | 7 | 0 | 1 | 2 | 3 | 4 | 5 | 6 | 7 | 0 | 1 | 2 | 3 | 4 | 5 | 6 | 7 | C0 | C1 | C2 | C3 | C4 | C5 | C6 | C7 | C8 |
| S0 | 0 | 1 | 0 | 1 | 0 | 1 | 0 | 1 | 0 | 1 | 0 | 1 | 0 | 1 | 0 | 1 | 0 | 1 | 0 | 1 | 0 | 1 | 0 | 1 | 0 | 1 | 0 | 1 | 0 | 1 | 0 | 1 | 1 | 0 | 0 | 0 | 0 | 0 | 0 | 0 | 0 |
| S1 | 0 | 0 | 1 | 1 | 0 | 0 | 1 | 1 | 0 | 0 | 1 | 1 | 0 | 0 | 1 | 1 | 0 | 0 | 1 | 1 | 0 | 0 | 1 | 1 | 0 | 0 | 1 | 1 | 0 | 0 | 1 | 1 | 0 | 1 | 0 | 0 | 0 | 0 | 0 | 0 | 0 |
| S2 | 0 | 0 | 0 | 0 | 1 | 1 | 1 | 1 | 0 | 0 | 0 | 0 | 1 | 1 | 1 | 1 | 0 | 0 | 0 | 0 | 1 | 1 | 1 | 1 | 0 | 0 | 0 | 0 | 1 | 1 | 1 | 1 | 0 | 0 | 1 | 0 | 0 | 0 | 0 | 0 | 0 |
| S3 | 1 | 1 | 1 | 1 | 1 | 1 | 1 | 1 | 0 | 0 | 0 | 0 | 0 | 0 | 0 | 0 | 0 | 0 | 0 | 0 | 0 | 0 | 0 | 0 | 1 | 1 | 1 | 1 | 1 | 1 | 1 | 1 | 0 | 0 | 0 | 1 | 0 | 0 | 0 | 0 | 0 |
| S4 | 1 | 1 | 1 | 1 | 1 | 1 | 1 | 1 | 0 | 0 | 0 | 0 | 0 | 0 | 0 | 0 | 0 | 0 | 0 | 0 | 0 | 0 | 0 | 0 | 1 | 1 | 1 | 1 | 1 | 1 | 1 | 1 | 0 | 0 | 0 | 0 | 1 | 0 | 0 | 0 | 0 |
| S5 | 0 | 0 | 0 | 0 | 0 | 0 | 0 | 0 | 1 | 1 | 1 | 1 | 1 | 1 | 1 | 1 | 1 | 1 | 1 | 1 | 1 | 1 | 1 | 1 | 0 | 0 | 0 | 0 | 0 | 0 | 0 | 0 | 0 | 0 | 0 | 0 | 0 | 1 | 0 | 0 | 0 |
| S6 | 1 | 1 | 1 | 1 | 1 | 1 | 1 | 1 | 0 | 0 | 0 | 0 | 0 | 0 | 0 | 0 | 1 | 1 | 1 | 1 | 1 | 1 | 1 | 1 | 0 | 0 | 0 | 0 | 0 | 0 | 0 | 0 | 0 | 0 | 0 | 0 | 0 | 0 | 1 | 0 | 0 |
| S7 | 0 | 0 | 0 | 0 | 0 | 0 | 0 | 0 | 1 | 1 | 1 | 1 | 1 | 1 | 1 | 1 | 0 | 0 | 0 | 0 | 0 | 0 | 0 | 0 | 1 | 1 | 1 | 1 | 1 | 1 | 1 | 1 | 0 | 0 | 0 | 0 | 0 | 0 | 0 | 1 | 0 |
| S8 | 1 | 1 | 1 | 1 | 1 | 1 | 1 | 1 | 1 | 1 | 1 | 1 | 1 | 1 | 1 | 1 | 1 | 1 | 1 | 1 | 1 | 1 | 1 | 1 | 1 | 1 | 1 | 1 | 1 | 1 | 1 | 1 | 1 | 1 | 1 | 1 | 1 | 1 | 1 | 1 | 1 |

Although shown in 3 sections, this should be considered a single matrix of 9 rows by 137 columns. Each column represents one of the data bits or check bits, which are inputs to the

ECC logic. Columns are labeled at the top with a beat number and a DQ bit number (or a check bit number). Each row is labelled at the left with an ECC output bit name (S0-S8).

Each data bit's location within the burst is defined within the table itself (by beat number and DQ bit number). On the upper byte of a 16-bit channel, the DQ bit numbers would be those shown above plus 8. In the 2nd half of a BL32 burst, the beat numbers would be those shown plus 16. All of the check bits appear on the pin which is currently set to Parity. This would be RDQS_t on a Write and DMI on a Read. C0-C8 appear on beats 7-15 of the burst in numerical order (23-31 in the 2nd half of a BL32 burst). That is, C0 is on beat 7, C1 on beat 8 and so on with C8 on beat 15.

During a Write Data Copy command (Write or Masked Write with MR21 OP[4]=1B, and DC[3:0] non-zero in the prior CAS command), only DQ[0] & DQ[8] are driven on the interface during data copy hits. DQ[7:1] & DQ[15:9] should be considered zero during these data copy hits for both the encoding and decoding of ECC. DC0=1 means hit on the 1st 8 beats of a burst, DC1=1 means hit on the 2nd 8 beats, DC2=1 means hit on the 3rd 8 beats of a BL32 burst, and DC3=1 means hit on the 4th 8 beats of a BL32 burst.

On beats 0-6 of a Read burst, the Parity pin shall be held at a logic zero level. On a BL32 Read burst, the Parity pin shall also be held at a logic zero level during beats 16-22. In certain modes, a BL32 burst is separated between beats 0-15 and beats 16-31 of the burst. The beat numbers mentioned apply to the burst associated with a single DRAM command, regardless of whether such separation of the burst occurs.

On beat 0 of a Write burst, the Parity pin shall be held at a logic zero level. On a BL32 write burst, the Parity pin shall also be held at a logic zero level on beat 16. In certain modes, a BL32 burst is separated between beats 0-15 and beats 16-31 of the burst. The beat numbers mentioned apply to the burst associated with a single DRAM command, regardless of whether such separation of the burst occurs.

The DMI bits are covered by a separate ECC. The check matrix for this code is defined below.

**Table 299 - ECC Check Matrix for DMI**

| Bit | M0 | M1 | M2 | M3 | M4 | M5 | M6 | M7 | M8 | M9 | M10 | M11 | M12 | M13 | M14 | M15 | C0 | C1 | C2 | C3 | C4 | C5 |
|---|---|---|---|---|---|---|---|---|---|---|---|---|---|---|---|---|---|---|---|---|---|---|
| S0 | 0 | 1 | 0 | 1 | 0 | 1 | 0 | 1 | 0 | 1 | 0 | 1 | 0 | 1 | 0 | 1 | 1 | 0 | 0 | 0 | 0 | 0 |
| S1 | 0 | 0 | 1 | 1 | 0 | 0 | 1 | 1 | 0 | 0 | 1 | 1 | 0 | 0 | 1 | 1 | 0 | 1 | 0 | 0 | 0 | 0 |
| S2 | 1 | 1 | 1 | 1 | 0 | 0 | 0 | 0 | 1 | 1 | 1 | 1 | 1 | 1 | 1 | 1 | 0 | 0 | 1 | 0 | 0 | 0 |
| S3 | 1 | 1 | 1 | 1 | 1 | 1 | 1 | 1 | 0 | 0 | 0 | 0 | 1 | 1 | 1 | 1 | 0 | 0 | 0 | 1 | 0 | 0 |
| S4 | 0 | 0 | 0 | 0 | 1 | 1 | 1 | 1 | 1 | 1 | 1 | 1 | 1 | 1 | 1 | 1 | 0 | 0 | 0 | 0 | 1 | 0 |
| S5 | 1 | 1 | 1 | 1 | 1 | 1 | 1 | 1 | 1 | 1 | 1 | 1 | 1 | 1 | 1 | 1 | 1 | 1 | 1 | 1 | 1 | 1 |

The bits labeled M0-M15 appear on the DMI pin on beats 0-15 in numerical order (16-31 in the 2nd half of a BL32 burst). The check bits from this ECC appear on the RDQS_t pin on a write. There is no DMI ECC on a Read. C0-C5 appear on beats 1-6 of the burst in numerical order (17-22 in the 2nd half of a BL32 burst).

**Usage of the ECC check matrix for ENCODING:**
During encoding, C0-C7 should be 0 for the purpose of calculating S0-S7 but the computed S0-S7 values must be used when calculating S8. The ECC output bits (S0-S8) are then utilized as C0-C8 for the interface and driven on the Parity signal at their previously defined bit locations within the burst.

The DMI ECC check matrix is used in the same fashion.

**Usage of the ECC check matrix for DECODING:**
During decoding, the ECC inputs to the matrix (C0-C8) are driven with the values which come from the Parity signal of the interface at their previously defined bit locations within the burst. The ECC output bits (S0-S8) are then used as the ECC syndrome for error detection & correction.

The DMI ECC check matrix is used in the same fashion.

**Error Detection:**
After decoding the data ECC, the resulting ECC syndrome [S8:S0] will be zero in the case of no ECC errors. When the syndrome is non-zero, S8 high indicates a single-bit error (SBE), while S8 low indicates a double-bit error (DBE).

After decoding the DMI ECC, the resulting ECC syndrome [S5:S0] will be zero in the case of no ECC errors. When the syndrome is non-zero, S5 high indicates a SBE, while S5 low indicates a DBE.

**Error Correction:**
When a single-bit data error is detected, [S2:S0] point directly to the DQ bit in error, and [S7:S3] can be decoded to generate a pointer to the beat in which the error falls, thus pinpointing the bit which is in error. Note that [S7:S3] do not form a direct pointer to the beat number until this decoding is performed. When less than 2 ones appear in [S7:S3], the error is in C0-C8.

When a single-bit DMI error is detected, [S4:S2] can be decoded to generate the 2 MSBs of a pointer to the beat in which the error falls. Concatenating these 2 bits with [S1:S0] (which need no decoding), produces a 4-bit pointer to the beat number where the DMI error occurred. When less than 2 ones appear in [S4:S2], the error is in C0-C5.

**Error reporting:**
A counter of Single-Bit-Errors and a Double-Bit-Error flag will be maintained on the DRAM, both of which can be read through mode register MR43. The DRAM will also store both syndromes from the most recent single-bit ECC error in MR44 & MR45. Note that both the data syndrome and the DMI syndrome are stored at this time regardless of which one indicates an error. Refer to these mode register definitions for additional detail.

Errors on Write FIFO commands will be ignored: When an ECC error occurs on a Write-FIFO command, the DRAM will not correct the data or DMI bits, it will not increment the SBE_count or set the DBE_flag in MR43, and it will not save the ECC syndromes in MR44 & MR45.

The controller would want to ignore ECC errors in a similar fashion on Read-FIFO and Read DQ Calibration commands. These 2 commands (along with Write-FIFO) are used for interface training, and errors are expected to occur during this training.

**ECC & DBI – Order of operations:**
When transmitting Write data, the Controller can first perform DBI/DMI encoding of the data (if DBI is enabled). DBI encoding will follow the same rules as on LPDDR4. It can then perform ECC generation on the resulting Data and DMI bits (if ECC is enabled). It is important to perform ECC generation after the DBI encoding, as Masked writes can alter the data during DBI encoding. The modified data is used for calculating the data ECC in all cases. The 6-bit DMI ECC and 9-bit data ECC are both transmitted on the RDQS_t pin and sent at the bit-times previously defined. See the Write Operation diagram below which illustrates the data flow.

When receiving Write data, the DRAM will first perform checking & correction on the DMI ECC. In parallel, it will perform ECC checking and correction on the data itself. Once the DMI is verified, it will proceed to perform DBI decoding of the data. DBI decoding follows the same rules as on LPDDR4. The Data ECC can be checked prior to DBI decoding due to the unique characteristics of the ECC code (the nature of the code is such that inverting an entire beat of the data would not change the ECC). The Write operation diagram illustrates this data flow.

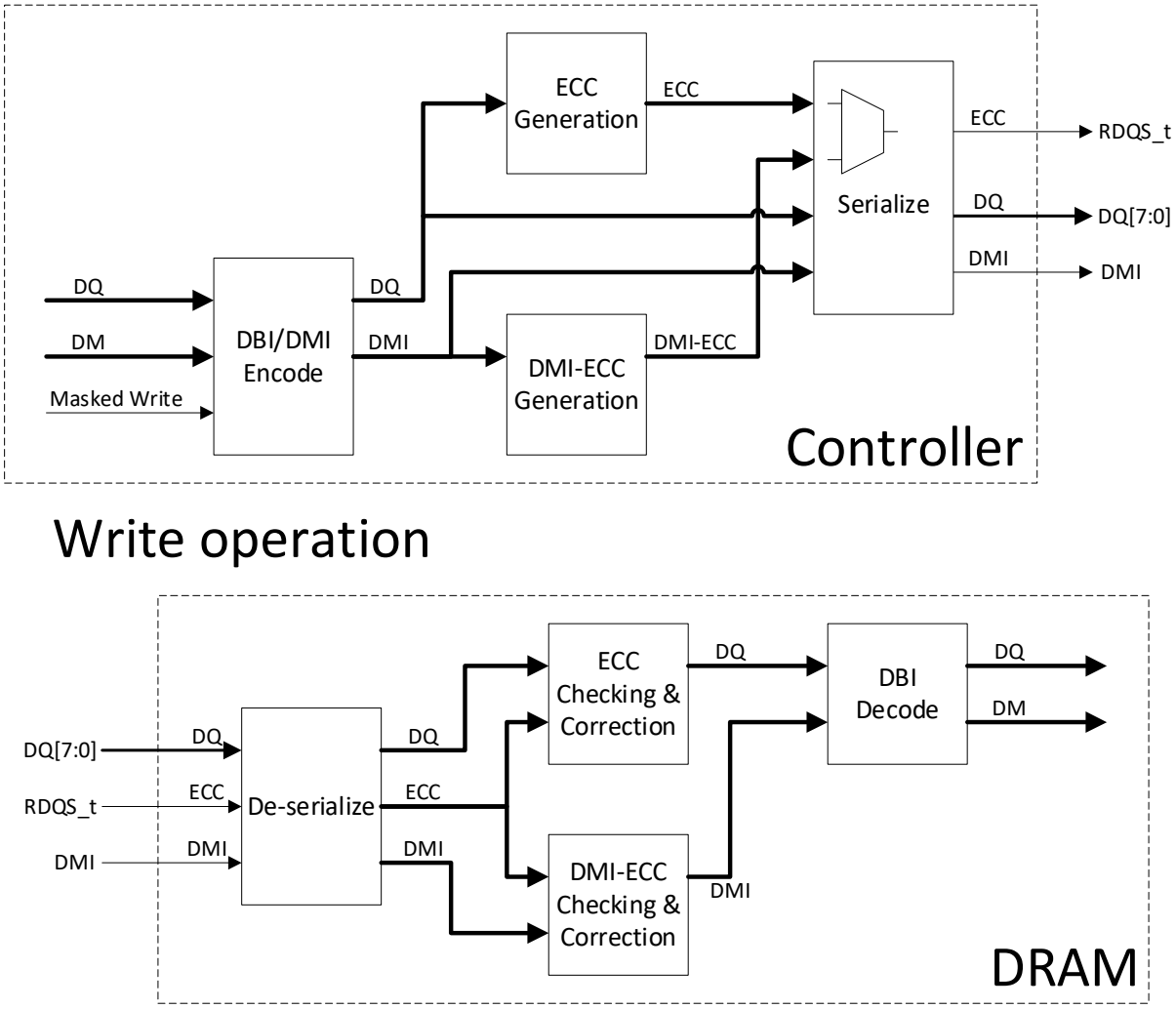


**Figure 227 - Data flow on a memory Write operation**

When transmitting Read data, the DRAM will either perform DBI encoding (if DBI is enabled), or ECC generation on the data (if ECC is enabled). Which operation is performed will depend on the features enabled. Since Read DBI and Link ECC are mutually exclusive, it never needs to perform both functions, and it never needs to compute or transmit ECC on the DBI bits. The DBI encoding follows the same rules as on LPDDR4. See the Read operation diagram below which illustrates the data flow.

When receiving Read data, the Controller would want to perform either DBI decoding (if DBI is enabled), or ECC checking & correction (if ECC is enabled), depending on the features enabled. DBI decoding follows the same rules as on LPDDR4. The Read operation diagram illustrates this data flow.

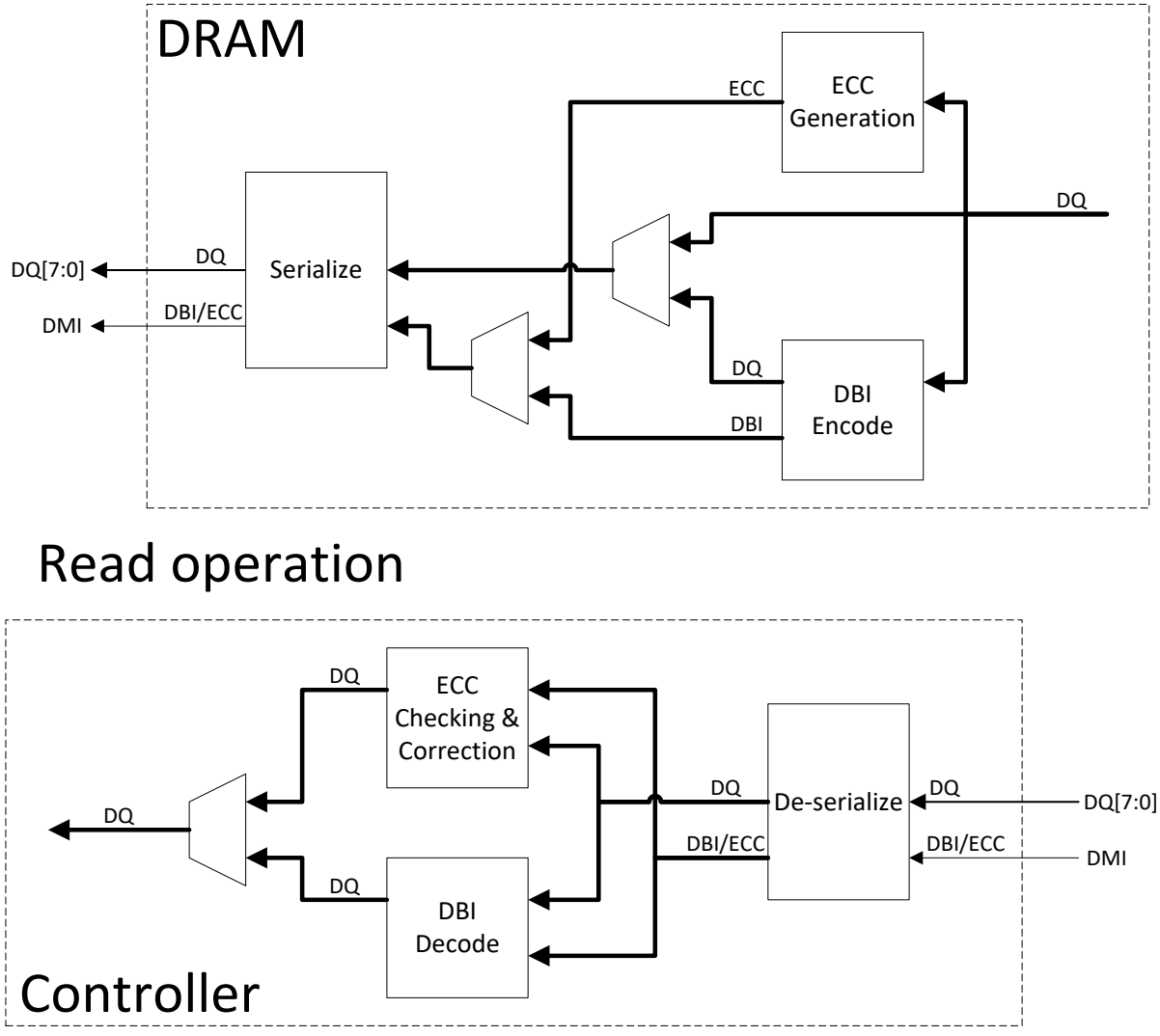


**Figure 228 - Data flow on a memory Read operation**

**Link Error Reporting Overview:**
The DRAM keeps a count of single-bit interface error occurrences detected and corrected by the link ECC. A SBE occurrence is a 16b burst in which one or more SBEs are detected. It also sets double bit error flag if one or more double-bit interface errors have been detected by ECC. Since ECC checking always happens at the receiving end of the link, the DRAM is only detecting ECC errors on Write or Masked Write commands; errors on Read commands must be detected by the controller.

The controller can check to see if the DRAM has detected any errors by periodically reading MR43. The action of reading this register clears the SBE_count and DBE_flag. If any errors have been detected, the controller can optionally proceed to obtain the syndromes from the **most recent** single-bit ECC error by reading MR44 & MR45. This action would similarly clear the syndromes as each of these mode registers is read. The syndromes would primarily be used for debugging interface problems during system development; they have limited usefulness in a production system (except during failure analysis of field returns).

### 7.7.8 Single-ended mode for Clock, Write Clock and RDQS

LPDDR5 SDRAM supports the function of single-ended mode for Clock, Write Clock and Strobe independently to reduce power consumption during low frequency operation. The data rate is required to be equal or less than 1600Mbps and ODT and NT ODT states for CK, CA, WCK, RDQS, DQ and DMI are required to be unterminated during Single-ended mode for Clock, Write Clock and/or RDQS.

Entering and exiting single-ended mode for Clock, Write Clock and RDQS is controlled by the following MR setting.

- MR1 OP[3]: CK mode
- MR20 OP[1:0]: RDQS (Read DQS)
- MR20 OP[3:2] : WCK mode

Single-ended mode for RDQS affects to the following commands.

- Read
- Mode Register Read
- Read DQ Training
- Read FIFO
- RDQS toggle mode
- Enhanced RDQS training mode

The allowable combinations for CK_t/c, WCK_t/c and RDQS_t/c are shown in **Table 300**. The remaining combinations are inhibited.

**Table 300 - Allowable combination among CK_t/c, WCK_t/c and RDQS_t/c**

| CK_t | CK_c | WCK_t | WCK_c | RDQS_t | RDQS_c |
|---|---|---|---|---|---|
| Enable | Enable | Enable | Enable | Enable | Enable |
| Enable | Disable | Enable | Enable | Enable | Enable |
| | | Enable | Disable | Enable | Disable |
| | | Disable | Enable | Disable | Enable |
| | | Enable | Disable | Disable | Disable |

### 7.7.8.1 Relationship among CK, WCK and RDQS during Single-ended mode

The timing of WCK_t/c and RDQS_t/C is defined as follows.

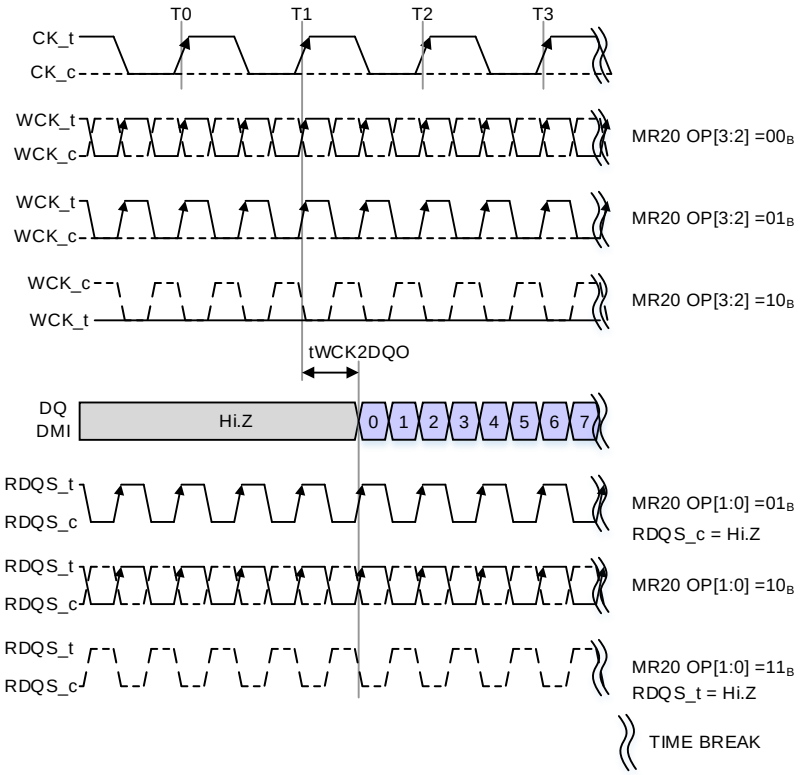


NOTE 1 tWCK2CK is 0ps in this instance.
NOTE 2 tDQSQ is 0ps in this instance.
NOTE 3 WCK clocking generates RDQS_t and RDQS_c.
NOTE 4 When MR20 OP[3:2]= $01_B$, WCK_t is used as WCK timing, and WCK_c should be maintained at a valid logic level.
NOTE 5 When MR20 OP[3:2]= $10_B$, WCK_cis used as WCK timing, and WCK_t should be maintained at a valid logic level.
NOTE 6 When MR20 OP[1:0]= $01_B$, RDQS_t is used as RDQS timing, and RDQS_c should be Hi-Z state.
NOTE 7 When MR20 OP[1:0]= $11_B$, RDQS_c is used as RDQS timing, and RDQS_t should be Hi-Z state.
NOTE 8 When MR20 OP[3:2]= $01_B$, WCK_t polarity is the same as WCK_t in MR20 OP[3:2]=$00_B$, and when MR20 OP[3:2]= $10_B$, WCK_c polarity is the same as WCK_c in MR20 OP[3:2]=$00_B$.
NOTE 9 When MR20 OP[1:0]= $01_B$, RDQS_t polarity is the same as RDQS_t in MR20 OP[1:0]=$10_B$, and when MR20 OP[1:0]= $11_B$, RDQS_cpolarity is the same as RDQS_cin MR20 OP[1:0]=$10_B$.

**Figure 229 - Timing Relationship among CK, WCK and RDQS**

### 7.7.8.2 Switching sequence between Single-ended and Differential

The mode switching for WCK and RDQS can be made by both an MR setting by MRW command and Frequency Set Point (FSP) procedure.

Switching the CK mode from differential to single ended and vice versa is done only via FSP procedure. The frequency set point update timing for Differential from/to Single-ended mode switching is shown below.

When changing the frequency set point MR16 OP[3:2], the VRCG setting: MR16 OP[6] is required to be changed into $V_{REF}$ Fast Response (high current) mode at the same time. After frequency change time (tFC) is satisfied, VRCG can be changed into normal operation mode via MR16 OP[6].

When CK mode switches via FSP procedure, additional timing period is needed after MRW command.

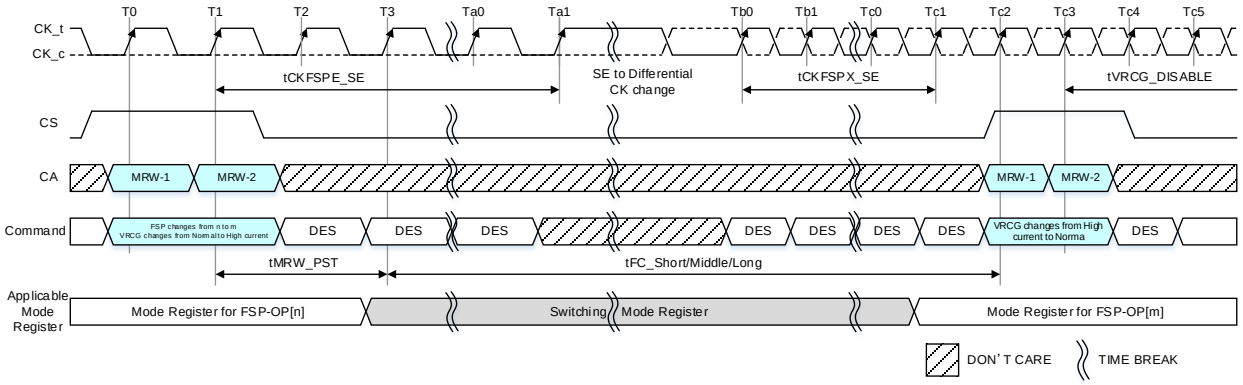


NOTE 1 The Clock frequency change definition should follow the frequency change operation. For more information, refer to Section 7.6.7 Input Clock Stop and Frequency Change.

NOTE 2 CK_c input level before Ta1 is an example. A stable high clock input is also allowed.

NOTE 3 Mode Register Setting FSP-OP=n: MR1 OP3=$1_B$: Single-Ended CK, Mode Register Setting FSP-OP=m: MR1 OP3=$0_B$: Differential CK.

NOTE 4 The CS input is required to be LOW from the rising edge of CK_t (at cycle T2) until the rising edge of CK_t at the end of tCKFSPX_SE timing (Tc1).

**Figure 230 - SE to Differential CK and Write DQS -FSP Switching Timing**

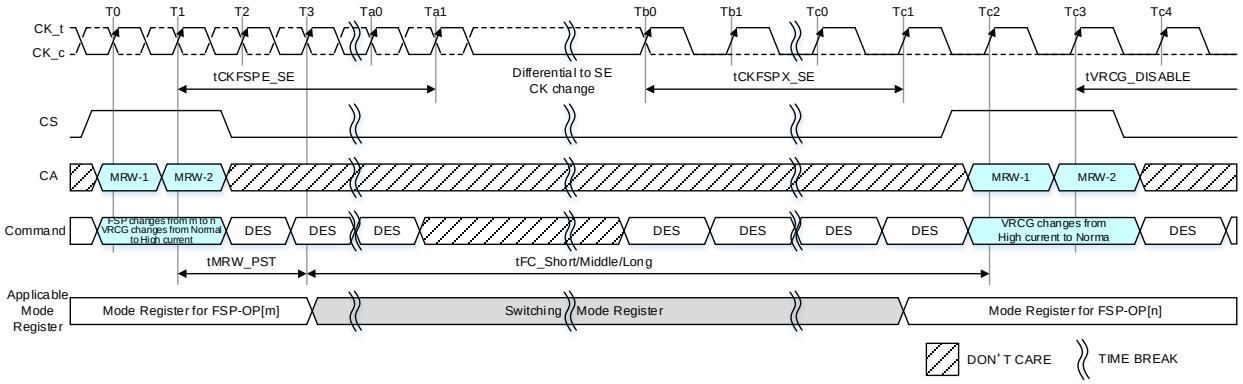


NOTE 1 The Clock frequency change definition should follow the frequency change operation. For more information, refer to Section 7.6.7 Input Clock Stop and Frequency Change.

NOTE 2 Clock input level after Tb0 is an example. A stable high clock input is also allowed.

NOTE 3 Mode Register Setting FSP-OP=m: MR1 OP3=$0_B$: Differential CK Mode Register Setting FSP-OP=m: MR1 OP3=$1_B$: SIngle-Ended CK.

NOTE 4 The CS input is required to be LOW from the rising edge of CK_t (at cycle T2) until the rising edge of CK_t at the end of tCKFSPX_SE timing (Tc1).

**Figure 231 - Differential to SE CK and Write DQS -FSP Switching Timing**

### 7.7.8.3 VRCG Enable timing

The VRCG Enable timing is postponed 2 clocks after MRW command to remove the effect of $V_{REF}$(CA) variation by VRCG mode change when MR1 OP[3]: Single ended Clock has been set $1_B$ (Enable) at least one physical register is shown below.

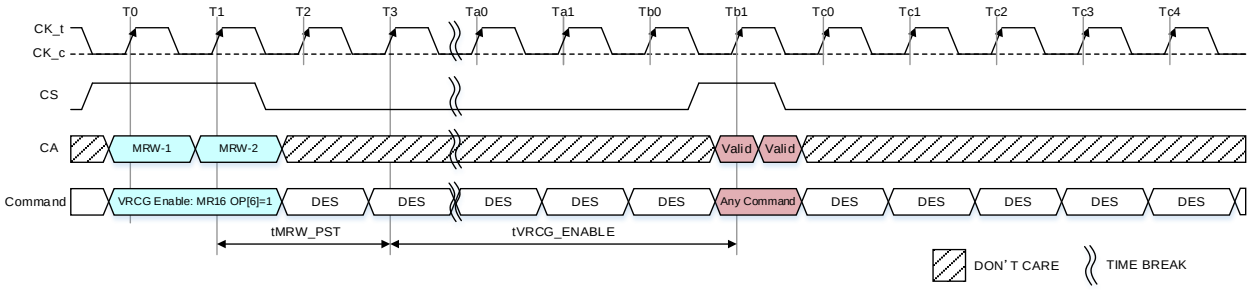


**Figure 232 - VRCG status change to high current mode: Single-ended Clock Case**

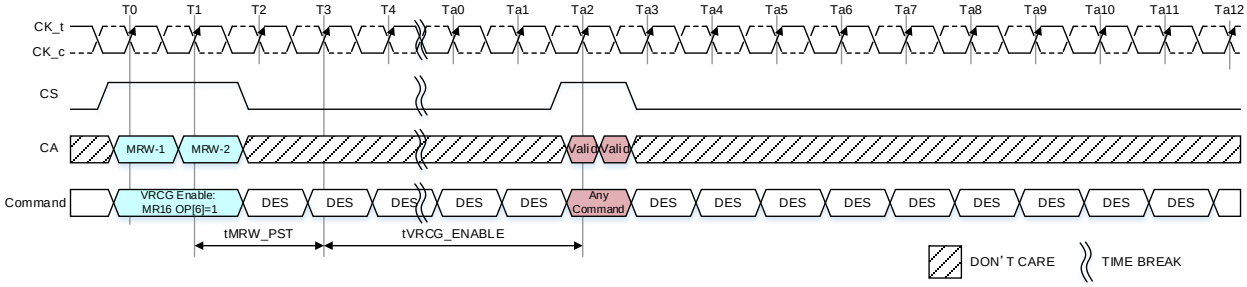


**Figure 233 - VRCG status change to high current mode: Differential Clock Case**

### 7.7.8.4 AC parameters for Single Ended (SE)

The AC timing is shown in Table is applied under conditions of Single ended mode.

**Table 301 - SE from/to Differential FSP and additional period for MRW AC timing**

| Parameter | Symbol | Min/ Max | Data Rate | Unit | Note |
|---|---|---|---|---|---|
| | | | Equal or less than 1600Mbps | | |
| Frequency Set Point Parameters for Switching Single-ended from/to Differential Clock | | | | | |
| Valid Clock Requirement after entering FSP when changing between SE/Differential modes | tCKFSPE_SE | Min | Max(15ns, 8nCK) | - | |
| Valid Clock Requirement before first valid command after an FSP change between SE/Differential modes | tCKFSPX_SE | Min | Max(15ns, 8nCK) | - | |
| Additional period for after MRW command | | | | | |
| Post Clock for MRW | tMRW_PST | Min | 2 | nCK | |

**Table 302 - Delta CK and DQS Specification**

| Item | Min/ Max | Equal or less than 1600Mbps | Unit | Note |
|---|---|---|---|---|
| Vref for single ended CK | - | VDDQ/2 | - | |
| Vref for single ended WCK | - | VDDQ/2 | - | |
| tCIVW1 | Min | 0.52 | UI | UI =0.5tCK |
| tCIVW2 | Min | 0.35 | UI | UI= 0.5tCK |
| tDIVW1 | Min | 0.52 | UI | UI=0.5tWCK, |
| tDIVW2 | Min | 0.35 | UI | UI=0.5tWCK, |
| tQSH | Min | tWCH-0.10 | tWCK(avg) | |
| tQSL | Min | tWCL-0.10 | tWCK(avg) | |
| tWCK2CK | Min | Max(-0.25*tWCK -100ps, TBDps) | ps | @WCK=800MHz, 2:1 mode CK/WCK asymmetrical |
| | Max | Max(0.25*tWCK +100ps,TBDps) | ps | |

### 7.7.9 Enhanced WCK Always On Mode

LPDDR5 device requires MR18 OP[4] nonzero to enable WCK Always On mode. LPDDR5 SDRAM optionally supports one or both of the following Enhanced WCK Always On Modes to save internal WCK clock net power.

#### 7.7.9.1 CAS-command-based Enhanced WCK Always On Mode

LPDDR5 device requires MR18 OP[4] nonzero to enable WCK Always On mode. If LPDDR5 device supports an enhanced WCK Always On Mode by reading out MR0 OP[2]=$1_B$, LPDDR5 controller is able to issue a CAS-WCK_SUSPEND command to reduce some of internal WCK clock net power consumption inside LPDDR5 devices. CAS-WCK_SUSPEND is a standalone command like CAS-FAST_SYNC command and may be issued anytime unless it interrupts on-going Read or Write WCK2CK SYNC operation when MR18 OP[4]=$1_B$. WCK SUSPEND mode keeps requiring WCK toggling input and exits automatically by following Read or Write or Mask Write command without issuing any additional explicit command. **Table 303** shows CAS command operands and WCK SUSPEND operation mode.

**Table 303 - CAS Command Operands - WCK SUSPEND**

| SDRAM COMMAND | BK ORG (BG, 16B, 8B) | SDR CMD PIN | DDR COMMAND PINS | | | | | | | CK_t edge |
|---|---|---|---|---|---|---|---|---|---|---|
| | | CS | CA0 | CA1 | CA2 | CA3 | CA4 | CA5 | CA6 | |
| CAS | Any | H | L | L | H | H | WS_WR | WS_RD | WS_FS | R1 |
| | | X | DC0 | DC1 | DC2 | DC3 | WRX | WXSA | WXSB /B3 | F1 |

| Operation Mode | | CAS Command Operands | | | | | |
|---|---|---|---|---|---|---|---|
| | WS_WR | WS_RD | WS_FS | DC0-3 | WRX | WXSA | WXSB /B3 |
| WCK SUSPEND | H | L | H | LLLL | L | L | L |

NOTE 1 CAS-WCK_SUSPEND command is valid only when MR0 OP[2]=1B (Enhanced WCK Always On mode supported) and MR18 OP[4]= 1B (WCK Always On mode enabled)

NOTE 1 BG mode, WCK:CK=4:1, READ w/ BL16, tWCKPST=4.5nWCK.
NOTE 2 MR18 OP[4]=1B (WCK Always On Mode Enabled), MR0 OP[2]=1B (Enhanced WCK Always On Mode Supported)

**Figure 234** illustrates CAS-WCK_SUSPENC command timing example with Read operation. CAS-WS_RD command at T0 initiates WCK2CK SYNC and LPDDR5 controller shall maintain WCK2CK SYNC lock status by WCK toggling input. CAS-WCK_SUSPEND command may be issued any time after WCK2CK SYNC expires (RL + BL/n_max + RD(tWCKPST/tCK), Tc5) not to interrupt on-going WCK2CK state from READ command. A minimum delay from CAS-WCK_SUSPEND command to following READ/WRITE/MASK WRITE command is defined as tWCKSUS timing parameter.

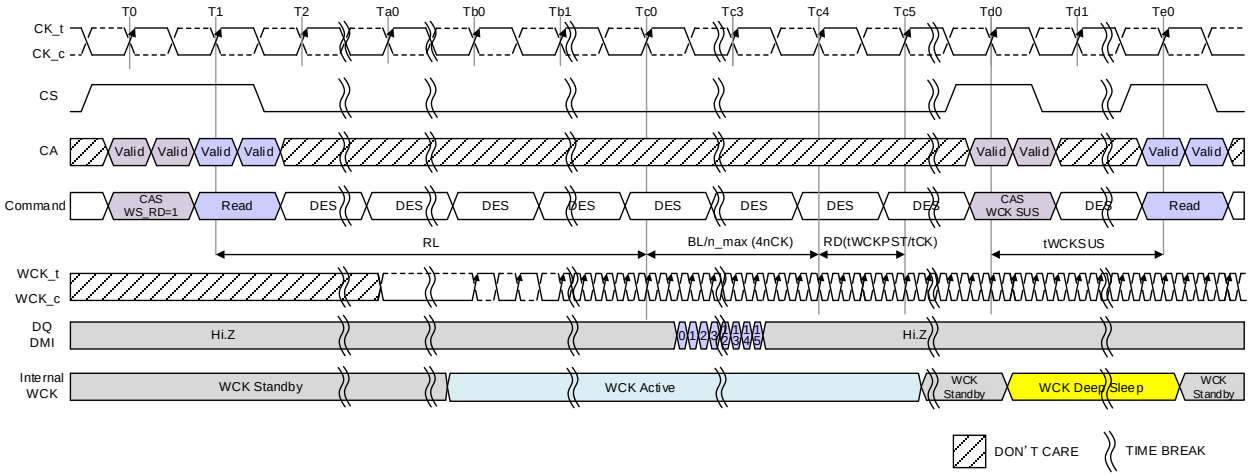


NOTE 1 BG mode, WCK:CK=4:1, READ w/ BL16, tWCKPST=4.5nWCK.
NOTE 2 MR18 OP[4]=1B (WCK Always On Mode Enabled), MR0 OP[2]=1B (Enhanced WCK Always On Mode Supported)

**Figure 234 - Enhanced WCK Always On Mode Timing Example**

**Table 304 - Enhanced WCK Always On Mode Timing Parameter**

| Parameter | Symbol | Min/Max | Value | Unit |
|---|---|---|---|---|
| Delay from CAS-WCK_SUSPEND command to next READ/WRITE/MASK WRITE Command | tWCKSUS | Min | 4 | nCK |

### 7.7.9.2 Read/Write-command-based Enhanced WCK Always On Mode

If LPDDR5 device supports Read/Write-command-based Enhanced WCK Always On ModeLPDDR5 SDRAM stays in WCK SUSPEND state to reduce some of internal WCK clock net power consumption while WCK is not required for data transaction. LPDDR5 SDRAM exits WCK SUSPEND automatically following Read or Write or Mask Write command. After the data transaction, LPDDR5 SDRAM automatically follows WCK2CK sync off timing to return to WCK SUSPEND state. All command to command timing constrains for WCK Always On Mode are unchanged when this mode is enabled.

**Figure 235** illustrates WCK SUSPEND timing example with Read operation. CAS-WS_RD command at T0 initiates WCK2CK SYNC and LPDDR5 controller shall maintain WCK2CK SYNC lock status by WCK toggling input. LPDDR5 device automatically exits WCK SUSPEND state after receiving Read command and returns to WCK SUSPEND state after data transaction.

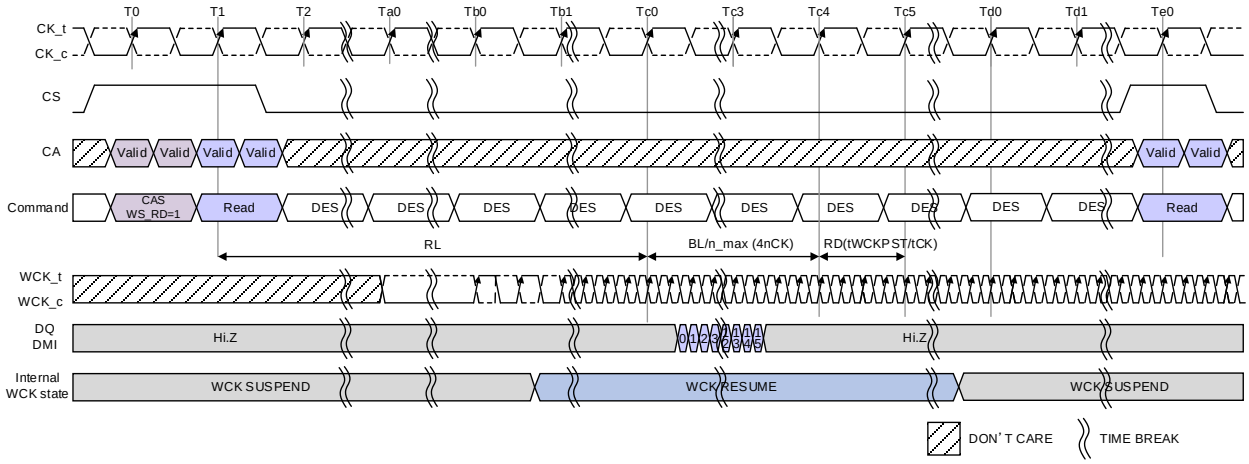


NOTE 1 MR18 OP[4]=$1_B$ (WCK Always On Mode Enabled) AND Read/Write-command-based Enhanced WCK Always On Mode Supported.

**Figure 235 - RD/WR-command-based Enhanced WCK Always On Mode Timing Example**

### 7.7.10 Rank to Rank AC Parameter

**Table 305 - WCK to CK/DQ offset Rank to Rank Variation**

| Item | Symbol | WCK Freq Mode | Min / Max | Data Rate | Unit | Note |
|---|---|---|---|---|---|---|
| | | | | All Operating Points | | |
| WCK to CK offset rank to rank variation | tWCK2CK_rank2rank | All Modes | Min | 0 | ps | 1, 2, 3 |
| | | | Max | 100 | ps | |
| WCK to DQ Input offset rank to rank variation | tWCK2DQI_rank2rank | High Freq Mode | Min | 0 | ps | 1, 2, 3, 4 |
| | | | Max | 150 | ps | |
| | | Low Freq Mode | Min | 0 | ps | |
| | | | Max | 250 | ps | |
| WCK to DQ Output offset rank to rank variation | tWCK2DQO_rank2rank | High Freq Mode | Min | 0 | ps | 1, 2, 3, 4 |
| | | | Max | 400 | ps | |
| | | Low Freq Mode | Min | 0 | ps | |
| | | | Max | 650 | ps | |

NOTE 1 The same voltage and temperature are applied to tWCK2CK_rank2rank, tWCK2DQI_rank2rank, tWCK2DQO_rank2rank AC parameters.

NOTE 2 tWCK2CK_rank2rank, tWCK2DQI_rank2rank and tWCK2DQO_rank2rank AC parameters are applied to multi-ranks DQ bytes per channel within a package consisting of the same design dies.

NOTE 3 tWCK2CK_rank2rank, tWCK2DQI_rank2rank and tWCK2DQO_rank2rank AC parameters are applied to multi byte mode dies DQ bytes per channel which share the same CK input within a package consisting of the same design dies.

NOTE 4 MR18 OP[3]=0B WCK Low Freq mode, MR18 OP[3]=1B WCK High Freq mode.

# 8 Command Constraint and AC timing

## 8.1 Effective Burst Length (BL/n) Definition

**Table 306 - Effective Burst Length (BL/n) Definition**

| WCK:CK Ratio | Bank ORG | Bank to Bank Constraints | WCK frequency | Burst Length (BL) | BL/n | BL/n_min | BL/n_max |
|---|---|---|---|---|---|---|---|
| 2:1 | 16B Mode | Any Bank to Bank | ≤1600Mhz | BL16 | 4*tCK (BL/4) | 4*tCK (BL/4) | 4*tCK (BL/4) |
| | | | | BL32 | 8*tCK (BL/4) | 8*tCK (BL/4) | 8*tCK (BL/4) |
| | 8B Mode | Any Bank to Bank | ≤1600Mhz | BL32 | 8*tCK (BL/4) | 8*tCK (BL/4) | 8*tCK (BL/4) |
| | | MRR, WFF, RFF, RDC 8) | ≤1600Mhz | BL16 | 8*tCK (BL/2) | 8*tCK (BL/2) | 8*tCK (BL/2) |
| 4:1 | 16B Mode | Any Bank to Bank | ≤1600Mhz | BL16 | 2*tCK (BL/8) | 2*tCK (BL/8) | 2*tCK (BL/8) |
| | | | | BL32 | 4*tCK (BL/8) | 4*tCK (BL/8) | 4*tCK (BL/8) |
| | BG Mode | Same BG | >1600Mhz | BL16 | 4*tCK (2*BL/8) | 2*tCK (BL/8) | 4*tCK (2*BL/8) |
| | | Different BG | | | 2*tCK (BL/8) | | |
| | | Same BG | | BL32 | 8*tCK (2*BL/8) | 6*tCK (1.5*BL/8) | 8*tCK (2*BL/8) |
| | | Different BG | | | 2*tCK (0.5*BL/8) | | |
| | 8B Mode | Any Bank to Bank | Any freq | BL32 | 4*tCK (BL/8) | 4*tCK (BL/8) | 4*tCK (BL/8) |
| | | MRR, WFF, RFF, RDC 8) | Any freq | BL16 | 4*tCK (BL/4) | 4*tCK (BL/4) | 4*tCK (BL/4) |

NOTE 1 BL/n is minimum column to column cycle time, tCCD(min).
NOTE 2 BL/n_min is minimum burst data transfer time in DQ bus.
NOTE 3 BL/n_max is required column array cycle time to allow next column array cycle.
NOTE 4 BL/n, BL/n_min and BL/n_max are parameters in a CK domain.
NOTE 5 BL/n, BL/n_min and BL/n_max are same in an 8B or 16B mode.
NOTE 6 In case of same BG in a BG mode, BL/n = BL/n_max > BL/n_min.
NOTE 7 In case of different BG in a BG mode, BL/n=BL/n_min < BL/n_max for BL16, BL/n < BL/n_min < BL/n_max for BL32.
NOTE 8 For MRR, WFF, RFF and RDC commands in an 8B mode, normal Write/Read operation timings (BL32) are applied to WCK2CK SYNC Off and ODT/Non-target ODT.

**Figure 236 - Write Timing Diagram (BG mode, CKR=4:1, BL32) Example for BL/n, BL/n_min and BL/n_max**

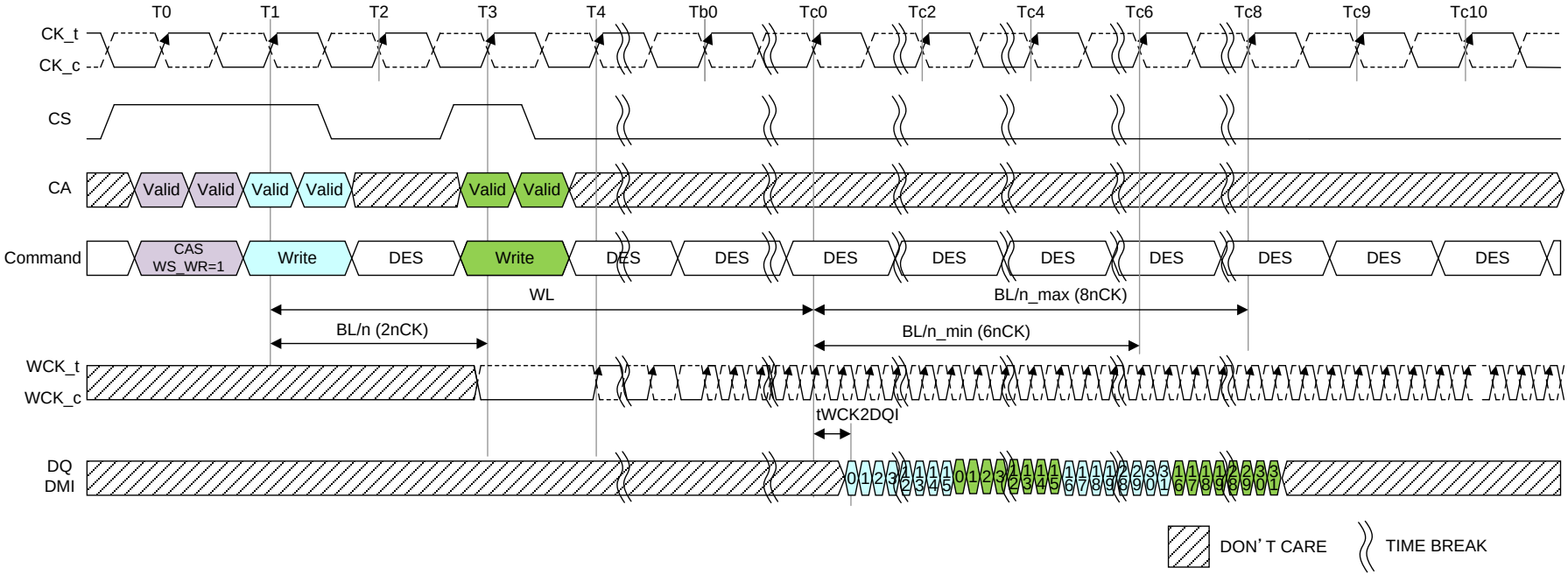

## 8.2 Command Timing constraints

**Table 307 - Command Timing Constraints for Same Banks in Same Bank Group (DQ ODT is disabled)**

| Next CMD / Current CMD | ACTIVE | READ | WRITE | MASK WRITE | PRECHARGE |
|---|---|---|---|---|---|
| **ACTIVE** | Illegal | RU(tRCD/tCK) | RU(tRCD/tCK) | RU(tRCD/tCK) | RU(tRAS/tCK) |
| **READ (BL16 or BL32)** | Illegal | BL/n | RL + BL/n_max + RU(tWCKDQO(max) /tCK) – WL[2)] | RL + BL/n_max + RU(tWCKDQO(max)/tCK) – WL[2)] | BL/n_min + RU(tRBTP/tCK[1)] |
| **WRITE (BL16)** | Illegal | WL + BL/n_max + RU(tWTR_L/tCK) | BL/n | 4*BL/n_max | WL + BL/n_min + 1 + RU(tWR/tCK) |
| **WRITE (BL32)** | | | | 2.5*BL/n_max | |
| **MASK WRITE (BL16)** | Illegal | WL + BL/n_max + RU(tWTR_L/tCK) | BL/n | 4*BL/n_max | WL + BL/n_min + 1 + RU(tWR/tCK) |
| **PRECHARGE** | RU(tRP/tCK) | Illegal | Illegal | Illegal | 2 |

Note 1. Refer to READ burst end to PRECHARGE delay (tRBTP)

Note 2. Read to Write Timing (tRTW) varies depending on an enhanced NT-ODT control (MR0 OP[0]), Bank/Bank Group Organization (MR3 OP[4:3]), WCK to CK frequency ratio (MR18: OP[7]), DQ Bus Receiver On-Die-Termination (MR11 OP[2:0]), Non-Target DQ Bus Receiver On-Die-Termination (MR41 OP[7:5]), Read DQS (MR20 OP[1:0]), Write link ECC Control (MR22 OP[5:4]), WCK-RDQS_t/Parity Training (MR46 OP[2]), and Read/Write-based WCK-RDQS_training mode (MR26 OP[7]). Refer to the Read to Write Timing (tRTW) Tables.

**Table 308 - Command Timing Constraints for Different Banks in Same Bank Group (DQ ODT is disabled)**

| Next CMD / Current CMD | ACTIVE | READ | WRITE | MASK WRITE | PRECHARGE |
|---|---|---|---|---|---|
| **ACTIVE** | RU(tRRD_L/tCK) | 1 | 1 | 1 | 1 |
| **READ (BL16 or BL32)** | 1 | BL/n | RL + BL/n_max + RU(tWCKDQO(max) /tCK) - WL[1)] | RL + BL/n_max + RU(tWCKDQO(max) /tCK) - WL[1)] | 1 |
| **WRITE (BL16)** | 1 | WL + BL/n_max + RU(tWTR_L/tCK) | BL/n | BL/n_max | 1 |
| **WRITE (BL32)** | | | | | |
| **MASK WRITE (BL16)** | 1 | WL + BL/n_max + RU(tWTR_L/tCK) | BL/n | BL/n_max | 1 |
| **PRECHARGE** | 1 | 1 | 1 | 1 | 2 |

Note 1. Read to Write Timing (tRTW) varies depending on an enhanced NT-ODT control (MR0 OP[0]), Bank/Bank Group Organization (MR3 OP[4:3]), WCK to CK frequency ratio (MR18: OP[7]), DQ Bus Receiver On-Die-Termination (MR11 OP[2:0]), Non-Target DQ Bus Receiver On-Die-Termination (MR41 OP[7:5]), Read DQS (MR20 OP[1:0]), Write link ECC Control (MR22 OP[5:4]), WCK-RDQS_t/Parity Training (MR46 OP[2]), and Read/Write-based WCK-RDQS_training mode (MR26 OP[7]). Refer to the Read to Write Timing (tRTW) Tables.

**Table 309 - Command Timing Constraints for Different Banks in Different Bank Group (DQ ODT is disabled)**

| Next CMD / Current CMD | ACTIVE | READ | WRITE | MASK WRITE | PRECHARGE |
|---|---|---|---|---|---|
| **ACTIVE** | RU(tRRD_S/tCK) | 1 | 1 | 1 | 1 |
| **READ (BL16 or BL32)** | 1 | BL/n | RL + BL/n_min + RU(tWCKDQO(max) /tCK) - WL[1)] | RL + BL/n_min + RU(tWCKDQO(max) /tCK) - WL[1)] | 1 |
| **WRITE (BL16)** | 1 | WL + BL/n_min + RU(tWTR_S/tCK) | BL/n | BL/n | 1 |
| **WRITE (BL32)** | | | | | |
| **MASK WRITE (BL16)** | 1 | WL + BL/n_min + RU(tWTR_S/tCK) | BL/n | BL/n | 1 |
| **PRECHARGE** | 1 | 1 | 1 | 1 | 2 |

Note 1. Read to Write Timing (tRTW) varies depending on an enhanced NT-ODT control (MR0 OP[0]), Bank/Bank Group Organization (MR3 OP[4:3]), WCK to CK frequency ratio (MR18: OP[7]), DQ Bus Receiver On-Die-Termination (MR11 OP[2:0]), Non-Target DQ Bus Receiver On-Die-Termination (MR41 OP[7:5]), Read DQS (MR20 OP[1:0]), Write link ECC Control (MR22 OP[5:4]), WCK-RDQS_t/Parity Training (MR46 OP[2]), and Read/Write-based WCK-RDQS_training mode (MR26 OP[7]). Refer to the Read to Write Timing (tRTW) Tables.

**Table 310 - Command Timing Constraints for Same Banks in 8B Mode (DQ ODT is disabled)**

| Current CMD \ Next CMD | ACTIVE | READ | WRITE | MASK WRITE | PRECHARGE |
|---|---|---|---|---|---|
| **ACTIVE** | Illegal | RU(tRCD/tCK) | RU(tRCD/tCK) | RU(tRCD/tCK) | RU(tRAS/tCK) |
| **READ (BL32)** | Illegal | BL/n | RL + BL/n + RU(tWCKDQO(max) /tCK) - WL[2)] | RL + BL/n + RU(tWCKDQO(max) /tCK) - WL[2)] | BL/n + RU(tRBTP/tCK)[1)] |
| **WRITE (BL32)** | Illegal | WL + BL/n + RU(tWTR/tCK) | BL/n | 4*BL/n | WL + BL/n **+ 1** + RU(tWR/tCK) |
| **MASK WRITE (BL32)** | Illegal | WL + BL/n + RU(tWTR/tCK) | BL/n | 4*BL/n (4:1)<br>2*BL/n (2:1) | WL + BL/n **+ 1** + RU(tWR/tCK) |
| **PRECHARGE** | RU(tRP/tCK) | Illegal | Illegal | Illegal | 2 |

Note 1. Refer to READ burst end to PRECHARGE delay (tRBTP).

Note 2. Read to Write Timing (tRTW) varies depending on an enhanced NT-ODT control (MR0 OP[0]), Bank/Bank Group Organization (MR3 OP[4:3]), WCK to CK frequency ratio (MR18: OP[7]), DQ Bus Receiver On-Die-Termination (MR11 OP[2:0]), Non-Target DQ Bus Receiver On-Die-Termination (MR41 OP[7:5]), Read DQS (MR20 OP[1:0]), Write link ECC Control (MR22 OP[5:4]), WCK-RDQS_t/Parity Training (MR46 OP[2]), and Read/Write-based WCK-RDQS_training mode (MR26 OP[7]). Refer to the Read to Write Timing (tRTW) Tables.

**Table 311 - Command Timing Constraints for Different Banks in 8B Mode (DQ ODT is disabled)**

| Current CMD \ Next CMD | ACTIVE | READ | WRITE | MASK WRITE | PRECHARGE |
|---|---|---|---|---|---|
| **ACTIVE** | RU(tRRD/tCK) | 1 | 1 | 1 | 1 |
| **READ (BL32)** | 1 | BL/n | RL + BL/n + RU(tWCKDQO(max) /tCK) - WL[1)] | RL + BL/n + RU(tWCKDQO(max) /tCK) - WL[1)] | 1 |
| **WRITE (BL32)** | 1 | WL + BL/n + RU(tWTR/tCK) | BL/n | BL/n | 1 |
| **MASK WRITE (BL32)** | 1 | WL + BL/n + RU(tWTR/tCK) | BL/n | BL/n | 1 |
| **PRECHARGE** | 1 | 1 | 1 | 1 | 2 |

Note 1. Read to Write Timing (tRTW) varies depending on an enhanced NT-ODT control (MR0 OP[0]), Bank/Bank Group Organization (MR3 OP[4:3]), WCK to CK frequency ratio (MR18: OP[7]), DQ Bus Receiver On-Die-Termination (MR11 OP[2:0]), Non-Target DQ Bus Receiver On-Die-Termination (MR41 OP[7:5]), Read DQS (MR20 OP[1:0]), Write link ECC Control (MR22 OP[5:4]), WCK-RDQS_t/Parity Training (MR46 OP[2]), and Read/Write-based WCK-RDQS_training mode (MR26 OP[7]). Refer to the Read to Write Timing (tRTW) Tables.

**Table 312 - Command Timing Constraints for Same Banks in 16B Mode (DQ ODT is disabled)**

| Current CMD \ Next CMD | ACTIVE | READ | WRITE | MASK WRITE | PRECHARGE |
|---|---|---|---|---|---|
| **ACTIVE** | Illegal | RU(tRCD/tCK) | RU(tRCD/tCK) | RU(tRCD/tCK) | RU(tRAS/tCK) |
| **READ (BL16 or BL32)** | Illegal | BL/n | RL + BL/n + RU(tWCKDQO(max) /tCK) - WL[2)] | RL + BL/n + RU(tWCKDQO(max) /tCK) - WL[2)] | BL/n + RU(tRBTP/tCK)[1)] |
| **WRITE (BL16)** | Illegal | WL + BL/n + RU(tWTR/tCK) | BL/n | 4*BL/n | WL + BL/n **+ 1** + RU(tWR/tCK) |
| **WRITE (BL32)** | | | | 2.5*BL/n | |
| **MASK WRITE (BL16)** | Illegal | WL + BL/n + RU(tWTR/tCK) | BL/n | 4*BL/n | WL + BL/n **+ 1** + RU(tWR/tCK) |
| **PRECHARGE** | RU(tRP/tCK) | Illegal | Illegal | Illegal | 2 |

Note 1. Refer to READ burst end to PRECHARGE delay (tRBTP).

Note 2. Read to Write Timing (tRTW) varies depending on an enhanced NT-ODT control (MR0 OP[0]), Bank/Bank Group Organization (MR3 OP[4:3]), WCK to CK frequency ratio (MR18: OP[7]), DQ Bus Receiver On-Die-Termination (MR11 OP[2:0]), Non-Target DQ Bus Receiver On-Die-Termination (MR41 OP[7:5]), Read DQS (MR20 OP[1:0]), Write link ECC Control (MR22 OP[5:4]), WCK-RDQS_t/Parity Training (MR46 OP[2]), and Read/Write-based WCK-RDQS_training mode (MR26 OP[7]). Refer to the Read to Write Timing (tRTW) Tables.

**Table 313 - Command Timing Constraints for Different Banks in 16B Mode (DQ ODT is disabled)**

| Current CMD \ Next CMD | ACTIVE | READ | WRITE | MASK WRITE | PRECHARGE |
|---|---|---|---|---|---|
| **ACTIVE** | RU(tRRD/tCK) | 1 | 1 | 1 | 1 |
| **READ (BL16 or BL32)** | 1 | BL/n | RL + BL/n + RU(tWCKDQO(max) /tCK) - WL[1)] | RL + BL/n + RU(tWCKDQO(max) /tCK) - WL[1)] | 1 |
| **WRITE (BL16)** | 1 | WL + BL/n + RU(tWTR/tCK) | BL/n | BL/n | 1 |
| **WRITE (BL32)** | | | | | |
| **MASK WRITE (BL16)** | 1 | WL + BL/n + RU(tWTR/tCK) | BL/n | BL/n | 1 |
| **PRECHARGE** | 1 | 1 | 1 | 1 | 2 |

Note 1. Read to Write Timing (tRTW) varies depending on an enhanced NT-ODT control (MR0 OP[0]), Bank/Bank Group Organization (MR3 OP[4:3]), WCK to CK frequency ratio (MR18: OP[7]), DQ Bus Receiver On-Die-Termination (MR11 OP[2:0]), Non-Target DQ Bus Receiver On-Die-Termination (MR41 OP[7:5]), Read DQS (MR20 OP[1:0]), Write link ECC Control (MR22 OP[5:4]), WCK-RDQS_t/Parity Training (MR46 OP[2]), and Read/Write-based WCK-RDQS_training mode (MR26 OP[7]). Refer to the Read to Write Timing (tRTW) Tables.

**Table 314 - Command Timing Constraints for Same Banks in Same Bank Group (DQ ODT is enabled)**

| Current CMD \ Next CMD | ACTIVE | READ | WRITE | MASK WRITE | PRECHARGE |
|---|---|---|---|---|---|
| **READ (BL16 or BL32)** | Illegal | BL/n | RL + BL/n_max + RU(tWCKDQO(max)/tCK) + RD(tRPST/tCK) – ODTLon – RD(tODTon(min)/tCK) + 1[2)] | RL + BL/n_max + RU(tWCKDQO(max)/tCK) + RD(tRPST/tCK) – ODTLon – RD(tODTon(min)/tCK) +1[2)] | BL/n_min + RU(tRBTP/tCK)[1)] |

Note 1. Refer to READ burst end to PRECHARGE delay (tRBTP).

Note 2. Read to Write Timing (tRTW) varies depending on an enhanced NT-ODT control (MR0 OP[0]), Bank/Bank Group Organization (MR3 OP[4:3]), WCK to CK frequency ratio (MR18: OP[7]), DQ Bus Receiver On-Die-Termination (MR11 OP[2:0]), Non-Target DQ Bus Receiver On-Die-Termination (MR41 OP[7:5]), Read DQS (MR20 OP[1:0]), Write link ECC Control (MR22 OP[5:4]), WCK-RDQS_t/Parity Training (MR46 OP[2]), and Read/Write-based WCK-RDQS_training mode (MR26 OP[7]). Refer to the Read to Write Timing (tRTW) Tables.

**Table 315 - Command Timing Constraints for Different Banks in Same Bank Group (DQ ODT is enabled)**

| Current CMD \ Next CMD | ACTIVE | READ | WRITE | MASK WRITE | PRECHARGE |
|---|---|---|---|---|---|
| **READ (BL16 or BL32)** | 1 | BL/n | RL + BL/n_max + RU(tWCKDQO(max)/tCK) + RD(tRPST/tCK) – ODTLon – RD(tODTon(min)/tCK) + 1[1)] | RL + BL/n_max + RU(tWCKDQO(max)/tCK) + RD(tRPST/tCK) – ODTLon – RD(tODTon(min)/tCK) +1[1)] | 1 |

Note 1. Read to Write Timing (tRTW) varies depending on an enhanced NT-ODT control (MR0 OP[0]), Bank/Bank Group Organization (MR3 OP[4:3]), WCK to CK frequency ratio (MR18: OP[7]), DQ Bus Receiver On-Die-Termination (MR11 OP[2:0]), Non-Target DQ Bus Receiver On-Die-Termination (MR41 OP[7:5]), Read DQS (MR20 OP[1:0]), Write link ECC Control (MR22 OP[5:4]), WCK-RDQS_t/Parity Training (MR46 OP[2]), and Read/Write-based WCK-RDQS_training mode (MR26 OP[7]). Refer to the Read to Write Timing (tRTW) Tables.

**Table 316 - Command Timing Constraints for Different Banks in Different Bank Group (DQ ODT is enabled)**

| Current CMD \ Next CMD | ACTIVE | READ | WRITE | MASK WRITE | PRECHARGE |
|---|---|---|---|---|---|
| **READ (BL16 or BL32)** | 1 | BL/n | RL + BL/n_min + RU(tWCKDQO(max)/tCK) + RD(tRPST/tCK) – ODTLon – RD(tODTon(min)/tCK) + 1[1)] | RL + BL/n_min + RU(tWCKDQO(max)/tCK) + RD(tRPST/tCK) – ODTLon – RD(tODTon(min)/tCK) + 1[1)] | 1 |

Note 1. Read to Write Timing (tRTW) varies depending on an enhanced NT-ODT control (MR0 OP[0]), Bank/Bank Group Organization (MR3 OP[4:3]), WCK to CK frequency ratio (MR18: OP[7]), DQ Bus Receiver On-Die-Termination (MR11 OP[2:0]), Non-Target DQ Bus Receiver On-Die-Termination (MR41 OP[7:5]), Read DQS (MR20 OP[1:0]), Write link ECC Control (MR22 OP[5:4]), WCK-RDQS_t/Parity Training (MR46 OP[2]), and Read/Write-based WCK-RDQS_training mode (MR26 OP[7]). Refer to the Read to Write Timing (tRTW) Tables.

**Table 317 - Command Timing Constraints for Same Banks in 8B Mode (DQ ODT is enabled)**

| Current CMD \ Next CMD | ACTIVE | READ | WRITE | MASK WRITE | PRECHARGE |
|---|---|---|---|---|---|
| **READ (BL32)** | Illegal | BL/n | RL + BL/n + RU(tWCKDQO(max)/tCK) + RD(tRPST/tCK) – ODTLon – RD(tODTon(min)/tCK) + 1[2)] | RL + BL/n + RU(tWCKDQO(max)/tCK) + RD(tRPST/tCK) – ODTLon – RD(tODTon(min)/tCK) + 1[2)] | BL/n + RU(tRBTP/tCK)[1)] |

Note 1. Refer to READ burst end to PRECHARGE delay (tRBTP).

Note 2. Read to Write Timing (tRTW) varies depending on an enhanced NT-ODT control (MR0 OP[0]), Bank/Bank Group Organization (MR3 OP[4:3]), WCK to CK frequency ratio (MR18: OP[7]), DQ Bus Receiver On-Die-Termination (MR11 OP[2:0]), Non-Target DQ Bus Receiver On-Die-Termination (MR41 OP[7:5]), Read DQS (MR20 OP[1:0]), Write link ECC Control (MR22 OP[5:4]), WCK-RDQS_t/Parity Training (MR46 OP[2]), and Read/Write-based WCK-RDQS_training mode (MR26 OP[7]). Refer to the Read to Write Timing (tRTW) Tables.

**Table 318- Command Timing Constraints for Different Banks in 8B Mode (DQ ODT is enabled)**

| Next CMD / Current CMD | ACTIVE | READ | WRITE | MASK WRITE | PRECHARGE |
|---|---|---|---|---|---|
| **READ (BL32)** | 1 | BL/n | RL + BL/n + RU(tWCKDQO(max)/tCK) + RD(tRPST/tCK) – ODTLon – RD(tODTon(min)/tCK) + 1[1)] | RL + BL/n + RU(tWCKDQO(max)/tCK) + RD(tRPST/tCK) – ODTLon – RD(tODTon(min)/tCK) + 1[1)] | 1 |

Note 1. Read to Write Timing (tRTW) varies depending on an enhanced NT-ODT control (MR0 OP[0]), Bank/Bank Group Organization (MR3 OP[4:3]), WCK to CK frequency ratio (MR18: OP[7]), DQ Bus Receiver On-Die-Termination (MR11 OP[2:0]), Non-Target DQ Bus Receiver On-Die-Termination (MR41 OP[7:5]), Read DQS (MR20 OP[1:0]), Write link ECC Control (MR22 OP[5:4]), WCK-RDQS_t/Parity Training (MR46 OP[2]), and Read/Write-based WCK-RDQS_training mode (MR26 OP[7]). Refer to the Read to Write Timing (tRTW) Tables.

**Table 319 - Command Timing Constraints for Same Banks in 16B Mode (DQ ODT is enabled)**

| Next CMD / Current CMD | ACTIVE | READ | WRITE | MASK WRITE | PRECHARGE |
|---|---|---|---|---|---|
| **READ (BL16 or BL32)** | Illegal | BL/n | RL + BL/n + RU(tWCKDQO(max)/tCK) + RD(tRPST/tCK) – ODTLon – RD(tODTon(min)/tCK) + 1[2)] | RL + BL/n + RU(tWCKDQO(max)/tCK) + RD(tRPST/tCK) – ODTLon – RD(tODTon(min)/tCK) + 1[2)] | BL/n + RU(tRBTP/tCK)[1)] |

Note 1. Refer to READ burst end to PRECHARGE delay (tRBTP).

Note 2. Read to Write Timing (tRTW) varies depending on an enhanced NT-ODT control (MR0 OP[0]), Bank/Bank Group Organization (MR3 OP[4:3]), WCK to CK frequency ratio (MR18: OP[7]), DQ Bus Receiver On-Die-Termination (MR11 OP[2:0]), Non-Target DQ Bus Receiver On-Die-Termination (MR41 OP[7:5]), Read DQS (MR20 OP[1:0]), Write link ECC Control (MR22 OP[5:4]), WCK-RDQS_t/Parity Training (MR46 OP[2]), and Read/Write-based WCK-RDQS_training mode (MR26 OP[7]). Refer to the Read to Write Timing (tRTW) Tables.

**Table 320 - Command Timing Constraints for Different Banks in 16B Mode (DQ ODT is enabled)**

| Next CMD / Current CMD | ACTIVE | READ | WRITE | MASK WRITE | PRECHARGE |
|---|---|---|---|---|---|
| **READ (BL16 or BL32)** | 1 | BL/n | RL + BL/n + RU(tWCKDQO(max)/tCK) + RD(tRPST/tCK) – ODTLon – RD(tODTon(min)/tCK) + 1[1)] | RL + BL/n + RU(tWCKDQO(max)/tCK) + RD(tRPST/tCK) – ODTLon – RD(tODTon(min)/tCK) + 1[1)] | 1 |

Note 1. Read to Write Timing (tRTW) varies depending on an enhanced NT-ODT control (MR0 OP[0]), Bank/Bank Group Organization (MR3 OP[4:3]), WCK to CK frequency ratio (MR18: OP[7]), DQ Bus Receiver On-Die-Termination (MR11 OP[2:0]), Non-Target DQ Bus Receiver On-Die-Termination (MR41 OP[7:5]), Read DQS (MR20 OP[1:0]), Write link ECC Control (MR22 OP[5:4]), WCK-RDQS_t/Parity Training (MR46 OP[2]), and Read/Write-based WCK-RDQS_training mode (MR26 OP[7]). Refer to the Read to Write Timing (tRTW) Tables.

**Table 321 - Auto Precharge Command Timing Constraints for Same Banks in Same Bank Group**

| Current CMD \ Next CMD | ACTIVE | READ with or without AP | WRITE with or without AP | MASK WRITE with or without AP | PRECHARGE or PRECHARGE ALL |
|---|---|---|---|---|---|
| READ with AP (BL16 or BL32) | BL/n_min + nRBTP [1)] + RU(tRPpb/tCK) | illegal | illegal | illegal | BL/n_min + nRBTP[1)] |
| WRITE with AP (BL16 or BL32) | WL + BL/n_min + 1 + nWR + RU(tRPpb/tCK) | illegal | illegal | illegal | WL + BL/n_min + 1 + nWR |
| MASK WRITE with AP (BL16) | WL + BL/n_min + 1 + nWR + RU(tRPpb/tCK) | illegal | illegal | illegal | WL + BL/n_min + 1 + nWR |

NOTE 1 Refer to READ burst end to PRECHARGE delay (tRBTP).

**Table 322 - Command Timing Constraints for Different Banks in Same Bank Group (DQ ODT Disabled)**

| Current CMD \ Next CMD | ACTIVE | READ with or without AP | WRITE with or without AP | MASK WRITE with or without AP | PRECHARGE[1)] |
|---|---|---|---|---|---|
| READ with AP (BL16 or BL32) | 1 | BL/n | RL + BL/n_max + RU(tWCKDQO(max) /tCK) - WL | RL + BL/n_max + RU(tWCKDQO(max) /tCK) - WL | 1 |
| WRITE with AP (BL16) | 1 | WL + BL/n_max + RU(tWTR_L/tCK) | BL/n | BL/n_max | 1 |
| WRITE with AP (BL32) | | | | | |
| MASK WRITE with AP (BL16) | 1 | WL + BL/n_max + RU(tWTR_L/tCK) | BL/n | BL/n_max | 1 |

NOTE 1 In case the next command is PRECHARGE ALL, PRECHARGE ALL command timing in Same Banks in Same Bank Group (Table 321) is applied.

**Table 323 - Command Timing Constraints for Different Banks in Different Bank Group (DQ ODT Disabled)**

| Current CMD \ Next CMD | ACTIVE | READ with or without AP | WRITE with or without AP | MASK WRITE with or without AP | PRECHARGE[1)] |
|---|---|---|---|---|---|
| READ with AP (BL16 or BL32) | 1 | BL/n | RL + BL/n_min + RU(tWCKDQO(max) /tCK) - WL | RL + BL/n_min + RU(tWCKDQO(max) /tCK) - WL | 1 |
| WRITE with AP (BL16) | 1 | WL + BL/n_min + RU(tWTR_S/tCK) | BL/n | BL/n | 1 |
| WRITE with AP (BL32) | | | | | |
| MASK WRITE with AP (BL16) | 1 | WL + BL/n_min + RU(tWTR_S/tCK) | BL/n | BL/n | 1 |

NOTE 1 In case the next command is PRECHARGE ALL, PRECHARGE ALL command timing in Same Banks in Same Bank Group (Table 321) is applied.

**Table 324 - Command Timing Constraints for Same Banks in 8B Mode**

| Current CMD \ Next CMD | ACTIVE | READ with or without AP | WRITE with or without AP | MASK WRITE with or without AP | PRECHARGE or PRECHARGE ALL |
|---|---|---|---|---|---|
| READ with AP (BL32) | BL/n + nRBTP[1)] + RU(tRPpb/tCK) | illegal | illegal | illegal | BL/n + nRBTP[1)] |
| WRITE with AP (BL32) | WL + BL/n + 1 + nWR + RU(tRPpb/tCK) | illegal | illegal | illegal | WL + BL/n + 1+ nWR |
| MASK WRITE with AP (BL32) | WL + BL/n + 1 + nWR + RU(tRPpb/tCK) | illegal | illegal | illegal | WL + BL/n + 1 + nWR |

NOTE 1 Refer to READ burst end to PRECHARGE delay (tRBTP).

**Table 325 - Command Timing Constraints for Different Banks in 8B Mode (DQ ODT Disabled)**

| Current CMD \ Next CMD | ACTIVE | READ with or without AP | WRITE with or without AP | MASK WRITE with or without AP | PRECHARGE[1)] |
|---|---|---|---|---|---|
| READ with AP (BL32) | 1 | BL/n | RL + BL/n + RU(tWCKDQO(max) /tCK) - WL | RL + BL/n + RU(tWCKDQO(max) /tCK) - WL | 1 |
| WRITE with AP (BL32) | 1 | WL + BL/n + RU(tWTR/tCK) | BL/n | BL/n | 1 |
| MASK WRITE with AP (BL32) | 1 | WL + BL/n + RU(tWTR/tCK) | BL/n | BL/n | 1 |

NOTE 1 In case the next command is PRECHARGE ALL, PRECHARGE ALL command timing in Same Banks in 8B Mode (Table 324) is applied.

**Table 326 - Command Timing Constraints for Same Banks in 16B Mode**

| Current CMD \ Next CMD | ACTIVE | READ with or without AP | WRITE with or without AP | MASK WRITE with or without AP | PRECHARGE or PRECHARGE ALL |
|---|---|---|---|---|---|
| READ with AP (BL16 or BL32) | BL/n + nRBTP[1)] + RU(tRPpb/tCK) | illegal | illegal | illegal | BL/n + nRBTP[1)] |
| WRITE with AP (BL16 or BL32) | WL + BL/n + 1 + nWR + RU(tRPpb/tCK) | illegal | illegal | illegal | WL + BL/n + 1 + nWR |
| MASK WRITE with AP (BL16) | WL + BL/n + 1 + nWR + RU(tRPpb/tCK) | illegal | illegal | illegal | WL + BL/n + 1 + nWR |

NOTE 1 Refer to READ burst end to PRECHARGE delay (tRBTP).

**Table 327 - Command Timing Constraints for Different Banks in 16B Mode (DQ ODT Disabled)**

| Current CMD \ Next CMD | ACTIVE | READ with or without AP | WRITE with or without AP | MASK WRITE with or without AP | PRECHARGE[1)] |
|---|---|---|---|---|---|
| READ with AP (BL16 or BL32) | 1 | BL/n | RL + BL/n + RU(tWCKDQO(max) /tCK) - WL | RL + BL/n + RU(tWCKDQO(max) /tCK) - WL | 1 |
| WRITE with AP (BL16 or BL32) | 1 | WL + BL/n + RU(tWTR/tCK) | BL/n | BL/n | 1 |
| MASK WRITE with AP (BL16) | 1 | WL + BL/n + RU(tWTR/tCK) | BL/n | BL/n | 1 |

NOTE 1 In case the next command is PRECHARGE ALL, PRECHARGE ALL command timing in Same Banks in 16B Mode (Table 326) is applied.

**Table 328 - Command Timing Constraints for Different Banks in Same Bank Group (DQ ODT Enabled)**

| Current CMD \ Next CMD | ACTIVE | READ with or without AP | WRITE with or without AP | MASK WRITE with or without AP | PRECHARGE[1)] |
|---|---|---|---|---|---|
| READ with AP (BL16 or BL32) | 1 | BL/n | RL + BL/n_max + RU(tWCKDQO(max) /tCK) + RD(tRPST/tCK) – ODTLon – RD(tODTon(min)/tCK) + 1 | RL + BL/n_max + RU(tWCKDQO(max) /tCK) + RD(tRPST/tCK) – ODTLon – RD(tODTon(min)/tCK) + 1 | 1 |

NOTE 1 In case the next command is PRECHARGE ALL, PRECHARGE ALL command timing in Same Banks in Same Bank Group (Table 321) is applied.

**Table 329 - Command Timing Constraints for Different Banks in Different Bank Group (DQ ODT Enabled)**

| Current CMD \ Next CMD | ACTIVE | READ with or without AP | WRITE with or without AP | MASK WRITE with or without AP | PRECHARGE[1)] |
|---|---|---|---|---|---|
| READ with AP (BL16 or BL32) | 1 | BL/n | RL + BL/n_min + RU(tWCKDQO(max) /tCK) + RD(tRPST/tCK) – ODTLon – RD(tODTon(min)/tCK) + 1 | RL + BL/n_min + RU(tWCKDQO(max) /tCK) + RD(tRPST/tCK) – ODTLon – RD(tODTon(min)/tCK) + 1 | 1 |

NOTE 1 In case the next command is PRECHARGE ALL, PRECHARGE ALL command timing in Same Banks in Same Bank Group (Table 321) is applied.

**Table 330 - Command Timing Constraints for Different Banks in 8B Mode (DQ ODT Enabled)**

| Current CMD \ Next CMD | ACTIVE | READ with or without AP | WRITE with or without AP | MASK WRITE with or without AP | PRECHARGE[1)] |
|---|---|---|---|---|---|
| READ with AP (BL32) | 1 | BL/n | RL + BL/n + RU(tWCKDQO(max)/tCK) + RD(tRPST/tCK) – ODTLon – RD(tODTon(min)/tCK) + 1 | RL + BL/n + RU(tWCKDQO(max)/tCK) + RD(tRPST/tCK) – ODTLon – RD(tODTon(min)/tCK) + 1 | 1 |

NOTE 1 In case the next command is PRECHARGE ALL, PRECHARGE ALL command timing in Same Banks in 8B Mode (Table 324) is applied.

**Table 331 - Command Timing Constraints for Different Banks in 16B Mode (DQ ODT Enabled)**

| Current CMD \ Next CMD | ACTIVE | READ with or without AP | WRITE with or without AP | MASK WRITE with or without AP | PRECHARGE[1)] |
|---|---|---|---|---|---|
| READ with AP (BL16 or BL32) | 1 | BL/n | RL + BL/n + RU(tWCKDQO(max)/tCK) + RD(tRPST/tCK) – ODTLon – RD(tODTon(min)/tCK) + 1 | RL + BL/n + RU(tWCKDQO(max)/tCK) + RD(tRPST/tCK) – ODTLon – RD(tODTon(min)/tCK) + 1 | 1 |

NOTE 1 In case the next command is PRECHARGE ALL, PRECHARGE ALL command timing in Same Banks in 16B Mode (Table 326) is applied.

### 8.2.1 Read to Write Timing (tRTW)

The Read to Write Timing (tRTW) varies depending on whether an enhanced NT-ODT control which the LPDDR5 SDRAM can be controlled NT-ODT timing for DQ and RDQS separately.
Whether LPDDR5 SDRAM supports the enhanced NT-ODT control is described in MR0 OP[0]: NT-ODT Control.

- MR0 OP[0]=$0_B$: SDRAM supports same NT-ODT turn on/off latency for DQ and RDQS.
- MR0 OP[0]=$1_B$: SDRAM supports separate NT-ODT turn on/off latency for DQ and RDQS.

The Read to Write Timing also varies depending on following mode register setting.

- MR3 OP[4:3]: Bank/Bank Group Organization
- MR18: OP[7]: WCK to CK frequency ratio
- MR11 OP[2:0]: DQ Bus Receiver On-Die-Termination
- MR41 OP[7:5]: Non-Target DQ Bus Receiver On-Die-Termination
- MR20 OP[1:0]: Read DQS
- MR22 OP[5:4]: Write link ECC Control
- MR46 OP[2]: WCK-RDQS_t/Parity Training
- MR26 OP[7]: Read/Write-based WCK-RDQS_training mode

The read to write timing (tRTW) by above-mentioned MR setting is shown in the following tables.

### 8.2.2 Command constraint from Read to Write timing

#### 8.2.2.1 In case of not supporting enhanced NT-ODT control

The following tables is shown the command constraint from Read to Write timing when LPDDR5 SDRAM does not support the enhanced NT-ODT control which the LPDDR5 SDRAM can be controlled NT-ODT turn on/off timing for DQ and RDQS separately. In this case, $0_B$ has been written in MR0 OP[0].

**Table 332 - Same/Different Banks in Same Bank Group (BG Mode)**

| Use RDQS_t as input | RDQS MR20 OP[1:0] | NT-ODT MR41 OP[7:5]: | ODT MR11 OP[2:0]: | CKR MR18: OP[7]: | tRTW | Unit | Note |
|---|---|---|---|---|---|---|---|
| Disable | Enable | Disable | Disable | 4:1 | RL+BL/n_max+RU(tWCK2DQO(max)/tCK)-WL | nCK | 1 |
| Disable | Enable | Disable | Enable | 4:1 | RL+BL/n_max+RU(tWCK2DQO(max)/tCK)+RD(tRPST/tCK)-ODTLon-RD(tODTon(min)/tCK)+1 | nCK | 1 |
| Disable | Enable | Enable | Enable | 4:1 | RL+BL/n_max+RU(tWCK2DQO(max)/tCK)+RD(tRPST/tCK)-ODTLon-RD(tODTon(min)/tCK)+1+1 | nCK | 1 |
| Enable | Enable | Disable | Disable | 4:1 | RL+BL/n_max+RU(tWCK2DQO(max)/tCK)-WL+1 | nCK | 1,2 |
| Enable | Enable | Disable | Enable | 4:1 | RL+BL/n_max+RU(tWCK2DQO(max)/tCK)+RD(tRPST/tCK)-ODTLon-RD(tODTon(min)/tCK)+1+1 | nCK | 1,2 |
| Enable | Enable | Enable | Enable | 4:1 | RL+BL/n_max+RU(tWCK2DQO(max)/tCK)+RD(tRPST/tCK)-ODTLon-RD(tODTon(min)/tCK)+1+1 | nCK | 1,2 |

NOTE 1 tWCK2DQO(max) is applied tWCK2DQO_LF(max) or tWCK2DQO_HF(max) depending on MR18 OP[3]: WCK Frequency Mode setting.
MR18 OP[3]=$0_B$: tWCK2DQO_LF(max)
MR18 OP[3]=$1_B$: tWCK2DQO_HF(max)

NOTE 2 Use RDQS_t as input Enable: Write Link ECC: MR22 OP[5:4]=$01_B$ or FIFO RDQS Training: MR46 OP[2]=$1_B$ or -Read/Write-based WCK-RDQS_training mode: MR26 OP[7]=$1_B$.

NOTE 3 RDQS disable is not supported in a BG mode.

**Table 333 - Different Banks in Different Bank Group (BG Mode)**

| Use RDQS_t as input | RDQS MR20 OP[1:0] | NT-ODT MR41 OP[7:5]: | ODT MR11 OP[2:0]: | CKR MR18: OP[7]: | tRTW | Unit | Note |
|---|---|---|---|---|---|---|---|
| Disable | Enable | Disable | Disable | 4:1 | RL+BL/n_min+RU(tWCK2DQO(max)/tCK)-WL | nCK | 1 |
| Disable | Enable | Disable | Enable | 4:1 | RL+BL/n_min+RU(tWCK2DQO(max)/tCK)+RD(tRPST/tCK)-ODTLon-RD(tODTon(min)/tCK)+1 | nCK | 1 |
| Disable | Enable | Enable | Enable | 4:1 | RL+BL/n_min+RU(tWCK2DQO(max)/tCK)+RD(tRPST/tCK)-ODTLon-RD(tODTon(min)/tCK)+1+1 | nCK | 1 |
| Enable | Enable | Disable | Disable | 4:1 | RL+BL/n_min+RU(tWCK2DQO(max)/tCK)-WL+1 | nCK | 1,2 |
| Enable | Enable | Disable | Enable | 4:1 | RL+BL/n_min+RU(tWCK2DQO(max)/tCK)+RD(tRPST/tCK)-ODTLon-RD(tODTon(min)/tCK)+1+1 | nCK | 1,2 |
| Enable | Enable | Enable | Enable | 4:1 | RL+BL/n_min+RU(tWCK2DQO(max)/tCK)+RD(tRPST/tCK)-ODTLon-RD(tODTon(min)/tCK)+1+1 | nCK | 1,2 |

NOTE 1 tWCK2DQO(max) is applied tWCK2DQO_LF(max) or tWCK2DQO_HF(max) depending on MR18 OP[3]: WCK Frequency Mode setting.
MR18 OP[3]=$0_B$: tWCK2DQO_LF(max)
MR18 OP[3]=$1_B$: tWCK2DQO_HF(max)

NOTE 2 Use RDQS_t as input Enable: Write Link ECC: MR22 OP[5:4]=$01_B$ or FIFO RDQS Training: MR46 OP[2]=$1_B$ or -Read/Write-based WCK-RDQS_training mode: MR26 OP[7]=$1_B$.

NOTE 3 RDQS disable is not supported in a BG mode.

**Table 334 - Same/Different Banks in 16B/8B Mode**

| Use RDQS_t as input | RDQS MR20 OP[1:0] | NT-ODT MR41 OP[7:5]: | ODT MR11 OP[2:0]: | CKR MR18: OP[7]: | tRTW | Unit | Note |
|---|---|---|---|---|---|---|---|
| Disable | Disable | Disable | Disable | 2:1 | RL+BL/n+RU(tWCK2DQO(max)/tCK)-WL | nCK | 1 |
| Disable | Disable | Disable | Disable | 4:1 | | | |
| Disable | Disable | Disable | Enable | 2:1 | RL+BL/n+RU(tWCK2DQO(max)/tCK)+RD(tRPST/tCK)-ODTLon-RD(tODTon(min)/tCK)+1 | nCK | 1 |
| Disable | Disable | Disable | Enable | 4:1 | | | |
| Disable | Disable | Enable | Enable | 2:1 | RL+BL/n+RU(tWCK2DQO(max)/tCK)+RD(tRPST/tCK)-ODTLon-RD(tODTon(min)/tCK)+1 | nCK | 1 |
| Disable | Disable | Enable | Enable | 4:1 | | | |
| Disable | Enable | Disable | Disable | 2:1 | RL+BL/n+RU(tWCK2DQO(max)/tCK)-WL | nCK | 1 |
| Disable | Enable | Disable | Disable | 4:1 | | | |
| Disable | Enable | Disable | Enable | 2:1 | RL+BL/n+RU(tWCK2DQO(max)/tCK)+RD(tRPST/tCK)-ODTLon-RD(tODTon(min)/tCK)+1 | nCK | 1 |
| Disable | Enable | Disable | Enable | 4:1 | | | |
| Disable | Enable | Enable | Enable | 2:1 | RL+BL/n+RU(tWCK2DQO(max)/tCK)+RD(tRPST/tCK)-ODTLon-RD(tODTon(min)/tCK)+1+2 | nCK | 1 |
| Disable | Enable | Enable | Enable | 4:1 | RL+BL/n+RU(tWCK2DQO(max)/tCK)+RD(tRPST/tCK)-ODTLon-RD(tODTon(min)/tCK)+1+1 | nCK | 1 |
| Enable | Disable | Disable | Disable | 4:1 | RL+BL/n+RU(tWCK2DQO(max)/tCK)-WL | nCK | 1,2,3 |
| Enable | Disable | Disable | Enable | 4:1 | RL+BL/n+RU(tWCK2DQO(max)/tCK)+RD(tRPST/tCK)-ODTLon-RD(tODTon(min)/tCK)+1 | nCK | 1,2,3 |
| Enable | Disable | Enable | Enable | 4:1 | RL+BL/n+RU(tWCK2DQO(max)/tCK)+RD(tRPST/tCK)-ODTLon-RD(tODTon(min)/tCK)+1 | nCK | 1,2,3 |
| Enable | Enable | Disable | Disable | 4:1 | RL+BL/n+RU(tWCK2DQO(max)/tCK)-WL+1 | nCK | 1,2,3 |
| Enable | Enable | Disable | Enable | 4:1 | RL+BL/n+RU(tWCK2DQO(max)/tCK)+RD(tRPST/tCK)-ODTLon-RD(tODTon(min)/tCK)+1+1 | nCK | 1,2,3 |
| Enable | Enable | Enable | Enable | 4:1 | RL+BL/n+RU(tWCK2DQO(max)/tCK)+RD(tRPST/tCK)-ODTLon-RD(tODTon(min)/tCK)+1+1 | nCK | 1,2,3 |

NOTE 1 tWCK2DQO(max) is applied tWCK2DQO_LF(max) or tWCK2DQO_HF(max) depending on MR18 OP[3]: WCK Frequency Mode setting.
MR18 OP[3]=$0_B$: tWCK2DQO_LF(max)
MR18 OP[3]=$1_B$: tWCK2DQO_HF(max)

NOTE 2 Use RDQS_t as input Enable: Write Link ECC: MR22 OP[5:4]=$01_B$ or FIFO RDQS Training: MR46 OP[2]=$1_B$ or -Read/Write-based WCK-RDQS_training mode: MR26 OP[7]=$1_B$.

NOTE 3 Use RDQS_t as input Enable can be supported for CKR=4:1 only.

#### 8.2.2.2 In case of supporting enhanced NT-ODT control

The following tables is shown the command constraint from Read to Write timing when LPDDR5 SDRAM supports the enhanced NT-ODT control which the LPDDR5 SDRAM can be controlled NT-ODT turn on/off timing for DQ and RDQS separately. In this case, $1_B$ has been written in MR0 OP[0].

**Table 335 - Same/Different Banks in Same Bank Group (BG Mode)**

| Use RDQS_t as input | RDQS MR20 OP[1:0] | NT-ODT MR41 OP[7:5]: | ODT MR11 OP[2:0]: | CKR MR18: OP[7]: | tRTW | Unit | Note |
|---|---|---|---|---|---|---|---|
| Disable | Enable | Disable | Disable | 4:1 | RL+BL/n_max+RU(tWCK2DQO(max)/tCK)-WL | nCK | 1 |
| Disable | Enable | Disable | Enable | 4:1 | RL+BL/n_max+RU(tWCK2DQO(max)/tCK)+RD(tRPST/tCK)-ODTLon-RD(tODTon(min)/tCK)+1 | nCK | 1 |
| Disable | Enable | Enable | Enable | 4:1 | RL+BL/n_max+RU(tWCK2DQO(max)/tCK)+RD(tRPST/tCK)-ODTLon-RD(tODTon(min)/tCK)+1 | nCK | 1 |
| Enable | Enable | Disable | Disable | 4:1 | RL+BL/n_max+RU(tWCK2DQO(max)/tCK)-WL+1 | nCK | 1,2 |
| Enable | Enable | Disable | Enable | 4:1 | RL+BL/n_max+RU(tWCK2DQO(max)/tCK)+RD(tRPST/tCK)-ODTLon-RD(tODTon(min)/tCK)+1+1 | nCK | 1,2 |
| Enable | Enable | Enable | Enable | 4:1 | RL+BL/n_max+RU(tWCK2DQO(max)/tCK)+RD(tRPST/tCK)-ODTLon-RD(tODTon(min)/tCK)+1+1 | nCK | 1,2 |

NOTE 1 tWCK2DQO(max) is applied tWCK2DQO_LF(max) or tWCK2DQO_HF(max) depending on MR18 OP[3]: WCK Frequency Mode setting.
MR18 OP[3]=$0_B$: tWCK2DQO_LF(max)
MR18 OP[3]=$1_B$: tWCK2DQO_HF(max)

NOTE 2 Use RDQS_t as input Enable: Write Link ECC: MR22 OP[5:4]=$01_B$ or FIFO RDQS Training: MR46 OP[2]=$1_B$ or -Read/Write-based WCK-RDQS_training mode: MR26 OP[7]=$1_B$.

NOTE 3 RDQS disable is not supported in a BG mode.

**Table 336 - Different Banks in Different Bank Group (BG Mode)**

| Use RDQS_t as input | RDQS MR20 OP[1:0] | NT-ODT MR41 OP[7:5]: | ODT MR11 OP[2:0]: | CKR MR18: OP[7]: | tRTW | Unit | Note |
|---|---|---|---|---|---|---|---|
| Disable | Enable | Disable | Disable | 4:1 | RL+BL/n_min+RU(tWCK2DQO(max)/tCK)-WL | nCK | 1 |
| Disable | Enable | Disable | Enable | 4:1 | RL+BL/n_min+RU(tWCK2DQO(max)/tCK)+RD(tRPST/tCK)-ODTLon-RD(tODTon(min)/tCK)+1 | nCK | 1 |
| Disable | Enable | Enable | Enable | 4:1 | RL+BL/n_min+RU(tWCK2DQO(max)/tCK)+RD(tRPST/tCK)-ODTLon-RD(tODTon(min)/tCK)+1 | nCK | 1 |
| Enable | Enable | Disable | Disable | 4:1 | RL+BL/n_min+RU(tWCK2DQO(max)/tCK)-WL+1 | nCK | 1,2 |
| Enable | Enable | Disable | Enable | 4:1 | RL+BL/n_min+RU(tWCK2DQO(max)/tCK)+RD(tRPST/tCK)-ODTLon-RD(tODTon(min)/tCK)+1+1 | nCK | 1,2 |
| Enable | Enable | Enable | Enable | 4:1 | RL+BL/n_min+RU(tWCK2DQO(max)/tCK)+RD(tRPST/tCK)-ODTLon-RD(tODTon(min)/tCK)+1+1 | nCK | 1,2 |

NOTE 1 tWCK2DQO(max) is applied tWCK2DQO_LF(max) or tWCK2DQO_HF(max) depending on MR18 OP[3]: WCK Frequency Mode setting.
MR18 OP[3]=$0_B$: tWCK2DQO_LF(max)
MR18 OP[3]=$1_B$: tWCK2DQO_HF(max)

NOTE 2 Use RDQS_t as input Enable: Write Link ECC: MR22 OP[5:4]=$01_B$ or FIFO RDQS Training: MR46 OP[2]=$1_B$ or -Read/Write-based WCK-RDQS_training mode: MR26 OP[7]=$1_B$.

NOTE 3 RDQS disable is not supported in a BG mode.

**Table 337 - Same/Different Banks in 16B/8B Mode**

| Use RDQS_t as input | RDQS MR20 OP[1:0] | NT-ODT MR41 OP[7:5]: | ODT MR11 OP[2:0]: | CKR MR18: OP[7]: | tRTW | Unit | Note |
|---|---|---|---|---|---|---|---|
| Disable | Disable | Disable | Disable | 2:1 | RL+BL/n+RU(tWCK2DQO(max)/tCK)-WL | nCK | 1 |
| Disable | Disable | Disable | Disable | 4:1 | | | |
| Disable | Disable | Disable | Enable | 2:1 | RL+BL/n+RU(tWCK2DQO(max)/tCK)+RD(tRPST/tCK)-ODTLon-RD(tODTon(min)/tCK)+1 | nCK | 1 |
| Disable | Disable | Disable | Enable | 4:1 | | | |
| Disable | Disable | Enable | Enable | 2:1 | RL+BL/n+RU(tWCK2DQO(max)/tCK)+RD(tRPST/tCK)-ODTLon-RD(tODTon(min)/tCK)+1 | nCK | 1 |
| Disable | Disable | Enable | Enable | 4:1 | | | |
| Disable | Enable | Disable | Disable | 2:1 | RL+BL/n+RU(tWCK2DQO(max)/tCK)-WL | nCK | 1 |
| Disable | Enable | Disable | Disable | 4:1 | | | |
| Disable | Enable | Disable | Enable | 2:1 | RL+BL/n+RU(tWCK2DQO(max)/tCK)+RD(tRPST/tCK)-ODTLon-RD(tODTon(min)/tCK)+1 | nCK | 1 |
| Disable | Enable | Disable | Enable | 4:1 | | | |
| Disable | Enable | Enable | Enable | 2:1 | RL+BL/n+RU(tWCK2DQO(max)/tCK)+RD(tRPST/tCK)-ODTLon-RD(tODTon(min)/tCK)+1 | nCK | 1 |
| Disable | Enable | Enable | Enable | 4:1 | | | |
| Enable | Disable | Disable | Disable | 4:1 | RL+BL/n+RU(tWCK2DQO(max)/tCK)-WL | nCK | 1,2,3 |
| Enable | Disable | Disable | Enable | 4:1 | RL+BL/n+RU(tWCK2DQO(max)/tCK)+RD(tRPST/tCK)-ODTLon-RD(tODTon(min)/tCK)+1 | nCK | 1,2,3 |
| Enable | Disable | Enable | Enable | 4:1 | RL+BL/n+RU(tWCK2DQO(max)/tCK)+RD(tRPST/tCK)-ODTLon-RD(tODTon(min)/tCK)+1 | nCK | 1,2,3 |
| Enable | Enable | Disable | Disable | 4:1 | RL+BL/n+RU(tWCK2DQO(max)/tCK)-WL+1 | nCK | 1,2,3 |
| Enable | Enable | Disable | Enable | 4:1 | RL+BL/n+RU(tWCK2DQO(max)/tCK)+RD(tRPST/tCK)-ODTLon-RD(tODTon(min)/tCK)+1+1 | nCK | 1,2,3 |
| Enable | Enable | Enable | Enable | 4:1 | RL+BL/n+RU(tWCK2DQO(max)/tCK)+RD(tRPST/tCK)-ODTLon-RD(tODTon(min)/tCK)+1+1 | nCK | 1,2,3 |

NOTE 1 tWCK2DQO(max) is applied tWCK2DQO_LF(max) or tWCK2DQO_HF(max) depending on MR18 OP[3]: WCK Frequency Mode setting.
MR18 OP[3]=$0_B$: tWCK2DQO_LF(max)
MR18 OP[3]=$1_B$: tWCK2DQO_HF(max)

NOTE 2 Use RDQS_t as input Enable: Write Link ECC: MR22 OP[5:4]=$01_B$ or FIFO RDQS Training: MR46 OP[2]=$1_B$ or -Read/Write-based WCK-RDQS_training mode: MR26 OP[7]=$1_B$.

NOTE 3 Use RDQS_t as input Enable can be supported for CKR=4:1 on

## 8.3 CAS Command Timing Constraints

**Table 338 - CAS(WS_FS) Command Timing Constraints**

| Current Command | Next Command | Timing Constraints (nCK) | | Note |
|---|---|---|---|---|
| | | Min | Max | |
| CAS (WS_FS=1, WS_WR=0, WS_RD=0) | POWER DOWN ENTRY (PDE) | tCMDPD | - | |
| | ACTIVATE-1 (ACT-1) | 1 | - | |
| | ACTIVATE-2 (ACT-2) | 1 | - | 2 |
| | PRECHARGE (PRE) (Per Bank, All Banks) | 1 | - | |
| | REFRESH (REF) (Per Bank, All Banks) | 1 | - | |
| | MASK WRITE (MWR) | 1 | - | 5 |
| | WRITE (WR/WR16/WR32) | 1 | - | 5 |
| | READ (RD/RD16/RD32) | 1 | - | 5 |
| | CAS (WS_WR) | illegal | illegal | 1 |
| | CAS (WS_RD) | illegal | illegal | 1 |
| | CAS (WS_FS) | illegal | illegal | 1 |
| | CAS (WS_OFF) | 6 | - | 4, 5 |
| | CAS (DC0-3) | 2 | - | |
| | CAS (WRX) | 2 | - | |
| | CAS (B3) | 2 | - | |
| | MULTI PURPOSE COMMAND (MPC) | 1 | - | |
| | SELF REFRESH ENTRY (SRE) | 1 | - | |
| | SELF REFRESH EXIT (SRX) | 1 | - | |
| | DEEP SLEEP MODE ENTRY (SRE w/ DSM=H) | tCMDPD | - | |
| | MODE REGISTER WRITE-1 (MRW-1) | 1 | - | |
| | MODE REGISTER WRITE-2 (MRW-2) | illegal | illegal | |
| | MODE REGISTER READ (MRR) | 1 | - | 5 |
| | WRITE FIFO (WFF) | 1 | - | 5 |
| | READ FIFO (RFF) | 1 | - | 5 |
| | READ DQ CALIBRATION (RDC) | 1 | - | 5 |

Note 1. Duplicated WCK2CK SYNC initiation is illegal.
Note 2. It is illegal unless an ACT-1 command is issued before the current command (CAS-WS_FS).
Note 3. When CAS-FAST_SYNC (WS_FS=1, WS_WR=0, WS_RD=0) is issued, other CAS operands (DC0-3, WRX, B3) shall be “0”.
Note 4. Max(tWCKENL_FS + tWCKPRE_Static) = 6nCK
Note 5. Valid WCK input is required until next command is issued. CAS(WS_OFF) should be

issued to terminate WCK2CK SYNC operation started by current command, CAS(WS_FS) if not followed by Mask Write, Write, Read, MRR, WFF, RFF or RDC.

**Table 339 - CAS(WS_WR) Command Timing Constraints**

| Current Command | Next Command | Timing Constraints (nCK) | | Note |
|---|---|---|---|---|
| | | Min | Max | |
| CAS (WS_WR=1, WS_FS=0, WS_RD=0) | POWER DOWN ENTRY (PDE) | illegal | illegal | |
| | ACTIVATE-1 (ACT-1) | illegal | illegal | |
| | ACTIVATE-2 (ACT-2) | illegal | illegal | |
| | PRECHARGE (PRE) (Per Bank, All Banks) | illegal | illegal | |
| | REFRESH (REF) (Per Bank, All Banks) | illegal | illegal | |
| | MASK WRITE (MWR) | 1 | 1 | 2 |
| | WRITE (WR/WR16/WR32) | 1 | 1 | 2 |
| | READ (RD/RD16/RD32) | illegal | illegal | |
| | CAS (WS_WR) | illegal | illegal | |
| | CAS (WS_RD) | illegal | illegal | |
| | CAS (WS_FS) | illegal | illegal | |
| | CAS (WS_OFF) | illegal | illegal | |
| | CAS (DC0-3) | illegal | illegal | |
| | CAS (WRX) | illegal | illegal | |
| | CAS (B3) | illegal | illegal | |
| | MULTI PURPOSE COMMAND (MPC) | illegal | illegal | |
| | SELF REFRESH ENTRY (SRE) | illegal | illegal | |
| | SELF REFRESH EXIT (SRX) | illegal | illegal | |
| | DEEP SLEEP MODE ENTRY (SRE w/ DSM=H) | illegal | illegal | |
| | MODE REGISTER WRITE-1 (MRW-1) | illegal | illegal | |
| | MODE REGISTER WRITE-2 (MRW-2) | illegal | illegal | |
| | MODE REGISTER READ (MRR) | illegal | illegal | |
| | WRITE FIFO (WFF) | 1 | 1 | |
| | READ FIFO (RFF) | illegal | illegal | |
| | READ DQ CALIBRATION (RDC) | illegal | illegal | |

Note 1. A CAS(WS_WR) command shall be followed by a MWR/WR/WR16/WR32/WFF command immediately without any command in between.

Note 2. When CAS(WS_WR=1, WS_RD=0, WS_FS=0) is issued, CAS operands (DC0-3 or WRX) can be applied together. Another CAS operand (B3) shall be “0”.

**Table 340 - CAS(WS_RD) Command Timing Constraints**

| Current Command | Next Command | Timing Constraints (nCK) | | Note |
|---|---|---|---|---|
| | | Min | Max | |
| CAS (WS_RD=1, WS_WR=0, WS_FS=0) | POWER DOWN ENTRY (PDE) | illegal | illegal | |
| | ACTIVATE-1 (ACT-1) | illegal | illegal | |
| | ACTIVATE-2 (ACT-2) | illegal | illegal | |
| | PRECHARGE (PRE) (Per Bank, All Banks) | illegal | illegal | |
| | REFRESH (REF) (Per Bank, All Banks) | illegal | illegal | |
| | MASK WRITE (MWR) | illegal | illegal | |
| | WRITE (WR/WR16/WR32) | illegal | illegal | |
| | READ (RD/RD16/RD32) | 1 | 1 | 2 |
| | CAS (WS_WR) | illegal | illegal | |
| | CAS (WS_RD) | illegal | illegal | |
| | CAS (WS_FS) | illegal | illegal | |
| | CAS (WS_OFF) | illegal | illegal | |
| | CAS (DC0-3) | illegal | illegal | |
| | CAS (WRX) | illegal | illegal | |
| | CAS (B3) | illegal | illegal | |
| | MULTI PURPOSE COMMAND (MPC) | illegal | illegal | |
| | SELF REFRESH ENTRY (SRE) | illegal | illegal | |
| | SELF REFRESH EXIT (SRX) | illegal | illegal | |
| | DEEP SLEEP MODE ENTRY (SRE w/ DSM=H) | illegal | illegal | |
| | MODE REGISTER WRITE-1 (MRW-1) | illegal | illegal | |
| | MODE REGISTER WRITE-2 (MRW-2) | illegal | illegal | |
| | MODE REGISTER READ (MRR) | 1 | 1 | |
| | WRITE FIFO (WFF) | illegal | illegal | |
| | READ FIFO (RFF) | 1 | 1 | |
| | READ DQ CALIBRATION (RDC) | 1 | 1 | |

Note 1. A CAS(WS_RD) command shall be followed by a MRR/RD/RD16/RD32/RFF/RDC command immediately without any command in between.
Note 2. When CAS(WS_RD=1, WS_WR=0, WS_FS=0) is issued, CAS operands (B3) can be applied together. Other CAS operands (DC0-3, WRX) shall be “0”.

**Table 341 - CAS(WS_OFF) Command Timing Constraints**

| Current Command | Next Command | Timing Constraints (nCK) | | Note |
|---|---|---|---|---|
| | | Min | Max | |
| CAS (WS_OFF: WS_FS=1, WS_WR=1, WS_RD=1) | POWER DOWN ENTRY (PDE) | tCMDPD | - | |
| | ACTIVATE-1 (ACT-1) | 1 | - | |
| | ACTIVATE-2 (ACT-2) | 1 | - | 1 |
| | PRECHARGE (PRE) (Per Bank, All Banks) | 1 | - | |
| | REFRESH (REF) (Per Bank, All Banks) | 1 | - | |
| | MASK WRITE (MWR) | illegal | illegal | |
| | WRITE (WR/WR16/WR32) | illegal | illegal | |
| | READ (RD/RD16/RD32) | illegal | illegal | |
| | CAS (WS_WR) | 3 | - | |
| | CAS (WS_RD) | 3 | - | |
| | CAS (WS_FS) | 3 | - | |
| | CAS (WS_OFF) | illegal | - | |
| | CAS (DC0-3) | 3 | - | 2 |
| | CAS (WRX) | 3 | - | |
| | CAS (B3) | 3 | - | 2 |
| | MULTI PURPOSE COMMAND (MPC) | 1 | - | |
| | SELF REFRESH ENTRY (SRE) | 1 | - | |
| | SELF REFRESH EXIT (SRX) | 1 | - | |
| | DEEP SLEEP MODE ENTRY (SRE w/ DSM=H) | tCMDPD | - | |
| | MODE REGISTER WRITE-1 (MRW-1) | 1 | - | |
| | MODE REGISTER WRITE-2 (MRW-2) | illegal | illegal | |
| | MODE REGISTER READ (MRR) | illegal | illegal | |
| | WRITE FIFO (WFF) | illegal | illegal | |
| | READ FIFO (RFF) | illegal | illegal | |
| | READ DQ CALIBRATION (RDC) | illegal | illegal | |

Note 1 It is illegal unless an ACT-1 command is issued before the current command (CAS-WS_FS).
Note 2 New WCK2CK SYNC should be initiated together. If not, it is illegal.

**Table 342 - CAS(DC0-3), CAS(WRX) Command Timing Constraints**

| Current Command | Next Command | Timing Constraints (nCK) | | Note |
|---|---|---|---|---|
| | | Min | Max | |
| CAS (DC0-3) or CAS (WRX) | POWER DOWN ENTRY (PDE) | illegal | illegal | |
| | ACTIVATE-1 (ACT-1) | illegal | illegal | |
| | ACTIVATE-2 (ACT-2) | illegal | illegal | |
| | PRECHARGE (PRE) (Per Bank, All Banks) | illegal | illegal | |
| | REFRESH (REF) (Per Bank, All Banks) | illegal | illegal | |
| | MASK WRITE (MWR) | illegal | illegal | |
| | WRITE (WR/WR16/WR32) | 1 | 1 | 1, 2 |
| | READ (RD/RD16/RD32) | illegal | illegal | |
| | CAS (WS_WR) | illegal | illegal | 3 |
| | CAS (WS_RD) | illegal | illegal | 3 |
| | CAS (WS_FS) | illegal | illegal | 3 |
| | CAS (WS_OFF) | illegal | illegal | |
| | CAS (DC0-3) | illegal | illegal | |
| | CAS (WRX) | illegal | illegal | |
| | CAS (B3) | illegal | illegal | |
| | MULTI PURPOSE COMMAND (MPC) | illegal | illegal | |
| | SELF REFRESH ENTRY (SRE) | illegal | illegal | |
| | SELF REFRESH EXIT (SRX) | illegal | illegal | |
| | DEEP SLEEP MODE ENTRY (SRE w/ DSM=H) | illegal | illegal | |
| | MODE REGISTER WRITE-1 (MRW-1) | illegal | illegal | |
| | MODE REGISTER WRITE-2 (MRW-2) | illegal | illegal | |
| | MODE REGISTER READ (MRR) | illegal | illegal | |
| | WRITE FIFO (WFF) | illegal | illegal | |
| | READ FIFO (RFF) | illegal | illegal | |
| | READ DQ CALIBRATION (RDC) | illegal | illegal | |

Note 1. Data Copy and WRITE X functions are mutually exclusive.
Note 2. CAS(DC0-3) or CAS(WRX) command should be followed by a WRITE command (WR/WR16/WR32) immediately without any command in between.
Note 3. WCK2CK SYNC should be initiated before issuing CAS(DC0-3). Duplicated CAS-WCK2CK SYNC initiation is illegal.

**Table 343 - CAS(B3) Command Timing Constraints**

| Current Command | Next Command | Timing Constraints (nCK) | | Note |
|---|---|---|---|---|
| | | Min | Max | |
| CAS (B3=1) | POWER DOWN ENTRY (PDE) | illegal | illegal | |
| | ACTIVATE-1 (ACT-1) | illegal | illegal | |
| | ACTIVATE-2 (ACT-2) | illegal | illegal | |
| | PRECHARGE (PRE) (Per Bank, All Banks) | illegal | illegal | |
| | REFRESH (REF) (Per Bank, All Banks) | illegal | illegal | |
| | MASK WRITE (MWR) | illegal | illegal | |
| | WRITE (WR/WR16/WR32) | illegal | illegal | |
| | READ (RD/RD16/RD32) | 1 | 1 | 2 |
| | CAS (WS_WR) | illegal | illegal | |
| | CAS (WS_RD) | illegal | illegal | |
| | CAS (WS_FS) | illegal | illegal | |
| | CAS (WS_OFF) | illegal | illegal | |
| | CAS (DC0-3) | illegal | illegal | |
| | CAS (WRX) | illegal | illegal | |
| | CAS (B3) | illegal | illegal | |
| | MULTI PURPOSE COMMAND (MPC) | illegal | illegal | |
| | SELF REFRESH ENTRY (SRE) | illegal | illegal | |
| | SELF REFRESH EXIT (SRX) | illegal | illegal | |
| | DEEP SLEEP MODE ENTRY (SRE w/ DSM=H) | illegal | illegal | |
| | MODE REGISTER WRITE-1 (MRW-1) | illegal | illegal | |
| | MODE REGISTER WRITE-2 (MRW-2) | illegal | illegal | |
| | MODE REGISTER READ (MRR) | illegal | illegal | 1 |
| | WRITE FIFO (WFF) | illegal | illegal | |
| | READ FIFO (RFF) | illegal | illegal | 1 |
| | READ DQ CALIBRATION (RDC) | illegal | illegal | 1 |

Note 1. Burst Start Address (B3) is not valid in MRR, RFF and RDC operations.
Note 2. CAS(B3) command should be followed by a READ command (RD/RD16/RD32) immediately without any command in between.

**Table 344 - CAS(WS_FS), CAS(WS_WR), CAS(WS_RD), CAS(WS_OFF) Command Timing Constraints**

| Current Command | Next Command | Timing Constraints (nCK) | | Note |
|---|---|---|---|---|
| | | Min | Max | |
| POWER DOWN ENTRY (PDE) | CAS(WS_FS) or CAS(WS_WR) or CAS(WS_RD) or CAS(WS_OFF) | illegal | illegal | |
| ACTIVATE-1 (ACT-1) | | 1 | - | |
| ACTIVATE-2 (ACT-2) | | 1 | - | |
| PRECHARGE (PRE) (Per Bank, All Banks) | | 1 | - | |
| REFRESH (REF) (Per Bank, All Banks) | | 1 | - | |
| MASK WRITE (MWR) | | WL + BL/n_max + RD(tWCKPST/tCK) + 1 | - | 2 |
| WRITE (WR/WR16/WR32) | | WL + BL/n_max + RD(tWCKPST/tCK) + 1 | - | 2 |
| READ (RD/RD16/RD32) | | RL + BL/n_max + RD(tWCKPST/tCK) + 1 | - | 2 |
| CAS (WS_WR) | | illegal | illegal | 3 |
| CAS (WS_RD) | | illegal | illegal | 3 |
| CAS (WS_FS) | | illegal | illegal | 3 |
| CAS (WS_OFF) | | 3 | - | 1, 11 |
| CAS (DC0-3) | | illegal | illegal | 3, 4 |
| CAS (WRX) | | illegal | illegal | 3, 4 |
| CAS (B3) | | illegal | illegal | 3, 4 |
| MULTI PURPOSE COMMAND (MPC) | | 1 | - | |
| SELF REFRESH ENTRY (SRE) | | 1 | - | |
| SELF REFRESH EXIT (SRX) | | 1 | - | |
| DEEP SLEEP MODE ENTRY (SRE w/ DSM=H) | | illegal | illegal | |
| MODE REGISTER WRITE-1 (MRW-1) | | illegal | illegal | |
| MODE REGISTER WRITE-2 (MRW-2) | | tMRD | - | |
| MODE REGISTER READ (MRR) | | RL + BL/n_max + RD(tWCKPST/tCK) + 1 | - | 2 |
| WRITE FIFO (WFF) | | Max[(WL + BL/n_max + **RU**(tWTR/tCK) -1), (WL + BL/n_max + RD(tWCKPST/tCK) + 1)] | - | 2, 5, 8, 10 |
| READ FIFO (RFF) | | Max[(tRTRRD-1), (RL + BL/n_max + RD(tWCKPST/tCK) + 1)] or Max[(tRTW-1),(RL + BL/n_max + RD(tWCKPST/tCK) + 1)] | - | 2, 6, 9, 10 |

| | | | | |
|---|---|---|---|---|
| READ DQ CALIBRATION (RDC) | | Max[(tRTRRD-1), (RL + BL/n_max + RD(tWCKPST/tCK) + 1)] | - | 2, 7, 9, 10 |

Note 1. Duplicated WCK2CK SYNC OFF is illegal.
Note 2. WCK2CK SYNC automatic off timing delay from a current command (RD, WR, MWR, MRR, WFF, RFF, RDC) is “WL (or RL) + BL/n_max + RD(tWCKPST/tCK)”.
Note 3. Duplicated WCK2CK SYNC initiation is illegal.
Note 4. WCK2CK SYNC should be initiated together or before issuing CAS(DC0-3) or CAS(WRX) or CAS(B3) command.
Note 5. Write (WR, WR16/32, MWR), Read (RD, RD16/32), MRR and RDC are not allowed. The min timing is applied to “CAS-WS_FS/WS_RD + RFF” only.
Note 6. “tRTRRD-1” timing (min) is applied to “CAS(WS_FS/WS_RD) + RD/MRR/RDC” or “CAS(WS_FS/WS_WR) + WR/MWR”. “tRTW-1” timing(min) is applied in case of “CAS(WS_FS/WS_WR) + WFF”.
Note 7. “CAS(WS_FS/WS_RD) + RFF” is not allowed.
Note 8. For CAS(WS_OFF), the min timing should be “WL + BL/n_max + RD(tWCKPST/tCK) + 1”.
Note 9. For CAS(WS_OFF), the min timing should be “RL + BL/n_max + RD(tWCKPST/tCK) + 1”.
Note 10. Refer to Timing Constraints for Training Commands.
Note 11. CAS(WS_OFF) to CAS(WS_OFF) is illegal. Refer to CAS (WS_OFF) Command Timing Constraints.

**Table 345 - CAS(DC0-3), CAS(WRX) Command Timing Constraints**

| Current Command | Next Command | Timing Constraints (nCK) | | Note |
|---|---|---|---|---|
| | | Min | Max | |
| POWER DOWN ENTRY (PDE) | CAS(DC0-3) or CAS(WRX) | illegal | illegal | |
| ACTIVATE-1 (ACT-1) | | 1 | - | |
| ACTIVATE-2 (ACT-2) | | 1 | - | |
| PRECHARGE (PRE) (Per Bank, All Banks) | | 1 | - | |
| REFRESH (REF) (Per Bank, All Banks) | | 1 | - | |
| MASK WRITE (MWR) | | BL/n -1 | - | 1 |
| WRITE (WR/WR16/WR32) | | BL/n - 1 | - | 1 |
| READ (RD/RD16/RD32) | | RL + BL/n_max + RU(tWCK2DQO(max) /tCK) – WL –1 | - | 1, 3, 4 |
| CAS (WS_WR) | | illegal | illegal | |
| CAS (WS_RD) | | illegal | illegal | |
| CAS (WS_FS) | | 2 | TBD | |
| CAS (WS_OFF) | | **3** | - | 2 |
| CAS (DC0-3) | | illegal | illegal | |
| CAS (WRX) | | illegal | illegal | |
| CAS (B3) | | illegal | illegal | |
| MULTI PURPOSE COMMAND (MPC) | | 1 | - | |
| SELF REFRESH ENTRY (SRE) | | illegal | illegal | |
| SELF REFRESH EXIT (SRX) | | **tXSR** | - | |
| DEEP SLEEP MODE ENTRY (SRE w/ DSM=H) | | illegal | illegal | |
| MODE REGISTER WRITE-1 (MRW-1) | | illegal | illegal | |
| MODE REGISTER WRITE-2 (MRW-2) | | **tMRD** | - | |
| MODE REGISTER READ (MRR) | | RL + BL/n_max + RU(tWCK2DQO(max) /tCK) - WL + 1 | - | 1 |
| WRITE FIFO (WFF) | | illegal | illegal | 1 |
| READ FIFO (RFF) | | tRTRRD - 1 | - | 1 |
| READ DQ CALIBRATION (RDC) | | tRTRRD - 1 | - | 1 |

Note 1. Refer to LPDDR5 command timing constraints.
Note 2. New WCK2CK SYNC should be initiated together with CAS(DC0-3) or CAS(WRX). If not, it is illegal.
Note 3. In case of DQ ODT enabled, READ-CAS(DC0-3/WRX) min timing should be “RL + BL/n_max + RU(tWCK2DQO(max) /tCK) – ODTLon – RD(tODTon(min)/tCK)”.
Note 4. “RL + BL/n_min + RU(tWCK2DQO(max) /tCK) – WL –1” is applied in case of different Banks in different Bank Groups @ BG mode. Refer to LPDDR5 READ-WRITE command timing constraints.

Note 5. Data Copy and WRITE X functions are mutually exclusive.

**Table 346 - CAS(B3) Command Timing Constraints**

| Current Command | Next Command | Timing Constraints (nCK) | | Note |
|---|---|---|---|---|
| | | Min | Max | |
| POWER DOWN ENTRY (PDE) | CAS(B3) | illegal | illegal | |
| ACTIVATE-1 (ACT-1) | | 1 | - | |
| ACTIVATE-2 (ACT-2) | | 1 | - | |
| PRECHARGE (PRE) (Per Bank, All Banks) | | 1 | - | |
| REFRESH (REF) (Per Bank, All Banks) | | 1 | - | |
| MASK WRITE (MWR) | | WL + BL/n_max + RU(tWTR/tCK) - 1 | - | 1, 3, 4 |
| WRITE (WR/WR16/WR32) | | WL + BL/n_max + RU(tWTR/tCK) - 1 | - | 1, 3, 4 |
| READ (RD/RD16/RD32) | | BL/n -1 | - | 1 |
| CAS (WS_WR) | | illegal | illegal | |
| CAS (WS_RD) | | illegal | illegal | |
| CAS (WS_FS) | | 2 | TBD | |
| CAS (WS_OFF) | | 3 | - | 2 |
| CAS (DC0-3) | | illegal | illegal | |
| CAS (WRX) | | illegal | illegal | |
| CAS (B3) | | illegal | illegal | |
| MULTI PURPOSE COMMAND (MPC) | | 1 | - | |
| SELF REFRESH ENTRY (SRE) | | illegal | illegal | |
| SELF REFRESH EXIT (SRX) | | tXSR | - | |
| DEEP SLEEP MODE ENTRY (SRE w/ DSM=H) | | illegal | illegal | |
| MODE REGISTER WRITE-1 (MRW-1) | | illegal | illegal | |
| MODE REGISTER WRITE-2 (MRW-2) | | tMRD | - | |
| MODE REGISTER READ (MRR) | | RL + BL/n_max + RD(tWCKPST/tCK) + 1 | - | 1 |
| WRITE FIFO (WFF) | | illegal | illegal | 1 |
| READ FIFO (RFF) | | tRTRRD - 1 | - | 1 |
| READ DQ CALIBRATION (RDC) | | tRTRRD - 1 | - | 1 |

Note 1. Refer to LPDDR5 command timing constraints.
Note 2. New WCK2CK SYNC should be initiated together with CAS(B3). If not, it is illegal.
Note 3. tWTR in 8B/16B modes, tWTR_S in case of different BG in a BG mode, tWTR_L in case of same BG in a BG mode.
Note 4. “WL + BL/n_min + RU(tWTR/tCK) –1” is applied in case of different Banks in different Bank Groups @ BG mode. Refer to LPDDR5 WRITE-READ command timing constraints.

**Table 347 – CAS(WCKSUS) Command Timing Constraints**

| Current Command | Next Command | Timing Constraints (nCK) | | Note |
|---|---|---|---|---|
| | | Min | Max | |
| CAS(WCKSUS) | POWER DOWN ENTRY (PDE) | 1 | - | |
| | ACTIVATE-1 (ACT-1) | 1 | - | |
| | ACTIVATE-2 (ACT-2) | 1 | - | |
| | PRECHARGE (PRE) (Per Bank, All Banks) | 1 | - | |
| | REFRESH (REF) (Per Bank, All Banks) | 1 | - | |
| | MASK WRITE (MWR) | 4 | - | |
| | WRITE (WR/WR16/WR32) | 4 | - | |
| | READ (RD/RD16/RD32) | 4 | - | |
| | CAS (WS_WR) | illegal | illegal | 2 |
| | CAS (WS_RD) | illegal | illegal | 2 |
| | CAS (WS_FS) | illegal | illegal | 2 |
| | CAS (WS_OFF) | 1 | - | |
| | CAS (DC0-3) | 3 | - | |
| | CAS (WRX) | 3 | - | |
| | CAS (B3) | 3 | - | |
| | MULTI PURPOSE COMMAND (MPC) | 1 | - | |
| | SELF REFRESH ENTRY (SRE) | 1 | - | |
| | SELF REFRESH EXIT (SRX) | illegal | illegal | |
| | DEEP SLEEP MODE ENTRY (SRE w/ DSM=H) | 1 | - | |
| | MODE REGISTER WRITE-1 (MRW-1) | 1 | - | |
| | MODE REGISTER WRITE-2 (MRW-2) | illegal | illegal | |
| | MODE REGISTER READ (MRR) | 4 | - | |
| | WRITE FIFO (WFF) | illegal | illegal | |
| | READ FIFO (RFF) | illegal | illegal | |
| | READ DQ CALIBRATION (RDC) | illegal | illegal | |

Note 1. CAS(WCKSUS) command is valid only when MR0 OP[2]=$1_B$ (Enhanced WCK Always On mode supported) and MR18 OP[4]= $1_B$ (WCK Always On mode enabled).
Note 2. Duplicated WCK2CK SYNC initiation is illegal.
Note 3. Command timing delay between the previous command of CAS(WCKSUS) and “Next Command” should be compliant to LPDDR5 command timing constraints.

**Table 348 - CAS(WCKSUS) Command Timing Constraints**

| Current Command | Next Command | Timing Constraints (nCK) | | Note |
|---|---|---|---|---|
| | | Min | Max | |
| POWER DOWN ENTRY (PDE) | CAS(WCKSUS) | illegal | illegal | |
| ACTIVATE-1 (ACT-1) | | 1 | - | |
| ACTIVATE-2 (ACT-2) | | 1 | - | |
| PRECHARGE (PRE) (Per Bank, All Banks) | | 1 | - | |
| REFRESH (REF) (Per Bank, All Banks) | | 1 | - | |
| MASK WRITE (MWR) | | WL + BL/n_max + RD(tWCKPST/tCK) + 1 | - | |
| WRITE (WR/WR16/WR32) | | WL + BL/n_max + RD(tWCKPST/tCK) + 1 | - | |
| READ (RD/RD16/RD32) | | RL + BL/n_max + RD(tWCKPST/tCK) + 1 | - | |
| CAS (WS_WR) | | illegal | illegal | |
| CAS (WS_RD) | | illegal | illegal | |
| CAS (WS_FS) | | tWCKENL_FS + tWCKPRE_Static + 2 | - | |
| CAS (WS_OFF) | | illegal | illegal | |
| CAS (DC0-3) | | illegal | illegal | |
| CAS (WRX) | | illegal | illegal | |
| CAS (B3) | | illegal | illegal | |
| MULTI PURPOSE COMMAND (MPC) | | 1 | - | |
| SELF REFRESH ENTRY (SRE) | | illegal | illegal | |
| SELF REFRESH EXIT (SRX) | | illegal | illegal | |
| DEEP SLEEP MODE ENTRY (SRE w/ DSM=H) | | illegal | illegal | |
| MODE REGISTER WRITE-1 (MRW-1) | | illegal | illegal | |
| MODE REGISTER WRITE-2 (MRW-2) | | tMRD | - | |
| MODE REGISTER READ (MRR) | | RL + BL/n_max + RD(tWCKPST/tCK) + 1 | - | |
| WRITE FIFO (WFF) | | illegal | illegal | |
| READ FIFO (RFF) | | RL + BL/n_max + RD(tWCKPST/tCK) + 1 | - | |
| READ DQ CALIBRATION (RDC) | | RL + BL/n_max + RD(tWCKPST/tCK) + 1 | - | |

Note 1. CAS(WCKSUS) command is valid only when MR0 OP[2]=$1_B$ (Enhanced WCK Always On mode supported) and MR18 OP[4]= $1_B$ (WCK Always On mode enabled).

## 8.4 Training related timing constraints

LPDDR5-SDRAMs can be entered Read or Write training state by issuing such as WRITE FIFO, READ FIFO and READ DQ Calibration. For those training commands that Read or Write the SDRAM, read latency (RL) and write latency (WL) are counted from the rising CK edge of each training command with the same timing relationship as any normal Read or Write command. Also, WCK synchronization should be applied in a same manner as normal Read or Write operation. WRITE FIFO, READ FIFO and READ DQ Calibration have a command burst length 16 regardless of bankgroup, 16bank or 8bank mode.

**Table 349 —Training-Related Timing Constraints**

| Previous Command | Next Command | Min Delay | Unit | Note |
|---|---|---|---|---|
| WR/WR32/MWR/WRX | WRITE FIFO | tWRWTR | nCK | 1,5 |
| | READ FIFO | Not Allowed | - | 2 |
| | READ DQ Calibration | WL+BL/n_max +RU(tWTR/tCK) | nCK | 5 |
| RD/RD32/MRR | WRITE FIFO | tRTRRD | nCK | 3,5 |
| | READ FIFO | Not Allowed | - | 2 |
| | READ DQ Calibration | tRTRRD | nCK | 3,5 |
| WRITE FIFO | WR/WR32/MWR/WRX | Not Allowed | - | 2 |
| | WRITE FIFO | 2 @ CK:WCK=1:4<br>4 @ CK:WCK=1:2 | nCK | |
| | RD/RD32/MRR | Not Allowed | - | 2 |
| | READ FIFO | Max(3nCK, WL+BL/n_max-RL +Max[RU(10ns/tCK), 4nCK)])<br>@ NT-ODT disabled<br>(MR11 OP[3]=$0_B$)<br><br>Max(3nCK, WL+BL/n_max-RL +RU[tODToff(max)/tCK] +Max[RU(10ns/tCK), 4nCK)])<br>@ NT-ODT enabled<br>(MR11 OP[3]=$1_B$) | nCK | 5 |
| | READ DQ Calibration | Not Allowed | - | 2 |
| READ FIFO | WR/WR32/MWR/WRX | tRTRRD | nCK | 3,5 |
| | WRITE FIFO | tRTW | nCK | 4,5,6 |
| | RD/RD32/MRR | tRTRRD | nCK | 3,5 |
| | READ FIFO | 2 @ CK:WCK=1:4<br>4 @ CK:WCK=1:2 | nCK | |
| | READ DQ Calibration | tRTRRD | nCK | 3,5 |
| READ DQ Calibration | WR/WR32/MWR/WRX | tRTRRD | nCK | 3,5 |
| | WRITE FIFO | tRTRRD | nCK | 3,5 |
| | RD/RD32/MRR | tRTRRD | nCK | 3,5 |
| | READ FIFO | Not Allowed | - | 2 |
| | READ DQ Calibration | 2 @ CK:WCK=1:4<br>4 @ CK:WCK=1:2 | nCK | |

NOTE 1 tWRWTR = WL + BL/n_max + MAX[RU7.5ns/tCK],4nCK]
NOTE 2 No commands are allowed between WRITE FIFO and READ FIFO except MRW commands related to training parameter and CAS command related with WCK2CK SYNC operation.
NOTE 3 tRTRRD = RL + BL/n_max + MAX[RU(7.5ns/tCK),4nCK
NOTE 4 tRTW is TBD and has different value based on ODT state.
NOTE 5 CAS command may be needed for WCK sync prior to "Next Command"
NOTE 6 In BG mode, tRTW applies the value of the table named “Different Banks in Different Bank Group (BG Mode)”.

## 8.5 MRR/MRW Timing Constraints

**Table 350 - MRR/MRW Timing Constraints: DQ ODT and NT-ODT is Disable**

| From Command | To Command | Minimum Delay between "From Command" and "To Command" | Unit | Note |
|---|---|---|---|---|
| MRR | MRR | tMRR | | 2 |
| | RD/RDA | RL +BL/n_max + RD(tWCKPST/tCK) +2 | | 2 |
| | WR/WRA/MWR/MWRA | tRTW + 2 | nCK | 1,3 |
| | MRW | RL +BL/n_max+ Max[ RU(tWCKDQO(max)/tCK), RD(tWCKPST(max)/tCK) ] + 2 | nCK | 1 |
| RD/RDA | MRR | RL +BL/n_max + RD(tWCKPST/tCK) +2 | nCK | 1 |
| WR/WRA/MWR/MWRA | | WL+BL/n_max +RU(tWTR/tCK) | nCK | 1,2,4 |
| MRW | | tMRD | | |
| Power Down Exit | | tXP + tMRRI | | |
| MRW | RD/RDA | tMRD | | |
| | WR/WRA/MWR/MWRA | tMRD | | |
| | MRW | tMRW | | |
| RD/RD FIFO/RD DQ CAL | MRW | RL+RU(tWCKDQO(max)/tCK)+BL/n_max+MAX[RU(7.5 ns/tCK),4nCK] | nCK | 1,2 |
| RD with Auto-Precharge | | RL+ RU(tWCKDQO(max)/tCK)+BL/n_max +MAX[RU(7.5ns/tCK),4nCK] +nRBTP | nCK | 1,2 |
| WR/MWR/WR FIFO | | WL+BL/n_max +MAX[RU(7.5ns/tCK),4nCK] | nCK | 1,2 |
| WR/MWR with Auto-Precharge | | WL+BL/n_max +MAX[RU(7.5ns/tCK),4nCK]+nWR | nCK | 1,2 |

NOTE 1 The timing variable “BL/n” and “BL/n_max” are defined by the previous command and shown in the effective burst length table.

NOTE 2 CAS command may be needed for WCK sync prior to "To Command"

NOTE 3 The Mode Register Read to Write Timing varies depending on an enhanced NT-ODT control (MR0 OP[0]), Bank/Bank Group Organization (MR3 OP[4:3]), WCK to CK frequency ratio (MR18: OP[7]), DQ Bus Receiver On-Die-Termination (MR11 OP[2:0]), Non-Target DQ Bus Receiver On-Die-Termination (MR41 OP[7:5]), Read DQS (MR20 OP[1:0]), Write link ECC Control (MR22 OP[5:4]), WCK-RDQS_t/Parity Training (MR46 OP[2]), and Read/Write-based WCK-RDQS_training mode (MR26 OP[7]). Refer to the Command Constraint and AC timing section about the Read to Write Timing (tRTW).

NOTE 4 Refer to Core timing table about tWTR. And in BG mode, “tWTR” shall be replaced with “tWTR_L.”

**Table 351 - MRR/MRW Timing Constraints: DQ ODT is Enable and NT-ODT Disable**

| From Command | To Command | Minimum Delay between "From Command" and "To Command" | Unit | Note |
|---|---|---|---|---|
| MRR | MRR | Same as ODT/NT-ODT Disable Case | | |
| | RD/RDA | Same as ODT/NT-ODT Disable Case | | |
| | WR/WRA/MWR/MWRA | tRTW + 2 | nCK | 1,2 |
| | MRW | Same as ODT/NT-ODT Disable Case | | |
| RD/RDA | MRR | Same as ODT/NT-ODT Disable Case | | |
| WR/WRA/MWR/MWRA | | | | |
| MRW | | | | |
| Power Down Exit | | | | |
| MRW | RD/RDA | Same as ODT/NT-ODT Disable Case | | |
| | WR/WRA/MWR/MWRA | | | |
| | MRW | | | |
| RD/RD FIFO/RD DQ CAL | MRW | Same as ODT/NT-ODT Disable Case | | |
| RD with Auto-Precharge | | | | |
| WR/MWR/WR FIFO | | | | |
| WR/MWR with Auto-Precharge | | | | |

NOTE 1 The timing variable "BL/n_max" is defined by the previous command and shown in the effective burst length table.

NOTE 2 The Mode Register Read to Write Timing varies depending on an enhanced NT-ODT control (MR0 OP[0]), Bank/Bank Group Organization (MR3 OP[4:3]), WCK to CK frequency ratio (MR18: OP[7]), DQ Bus Receiver On-Die-Termination (MR11 OP[2:0]), Non-Target DQ Bus Receiver On-Die-Termination (MR41 OP[7:5]), Read DQS (MR20 OP[1:0]), Write link ECC Control (MR22 OP[5:4]), WCK-RDQS_t/Parity Training (MR46 OP[2]), and Read/Write-based WCK-RDQS_training mode (MR26 OP[7]). Refer to the Command Constraint and AC timing section about the Read to Write Timing (tRTW).

**Table 352 - MRR/MRW Timing Constraints: DQ ODT is Enable and NT-ODT Enable**

| From Command | To Command | Minimum Delay between "From Command" and "To Command" | Unit | Note |
|---|---|---|---|---|
| MRR | MRR | Same as ODT/NT-ODT Disable Case | | |
| | RD/RDA | Same as ODT/NT-ODT Disable Case | | |
| | WR/WRA/MWR/MWRA | tRTW + 2 | nCK | 1,2 |
| | MRW | Same as ODT/NT-ODT Disable Case | | 3 |
| RD/RDA | MRR | Same as ODT/NT-ODT Disable Case | | |
| WR/WRA/MWR/MWRA | | | | |
| MRW | | | | |
| Power Down Exit | | | | |
| MRW | RD/RDA | Same as ODT/NT-ODT Disable Case | | |
| | WR/WRA/MWR/MWRA | | | |
| | MRW | | | |
| RD/RD FIFO/RD DQ CAL | MRW | Same as ODT/NT-ODT Disable Case | | |
| RD with Auto-Precharge | | | | |
| WR/MWR/WR FIFO | | | | |
| WR/MWR with Auto-Precharge | | | | |

NOTE 1 The timing variable "BL/n_max" is defined by the previous command and shown in the effective burst length table.

NOTE 2 The Mode Register Read to Write Timing varies depending on an enhanced NT-ODT control (MR0 OP[0]), Bank/Bank Group Organization (MR3 OP[4:3]), WCK to CK frequency ratio (MR18: OP[7]), DQ Bus Receiver On-Die-Termination (MR11 OP[2:0]), Non-Target DQ Bus Receiver On-Die-Termination (MR41 OP[7:5]), Read DQS (MR20 OP[1:0]), Write link ECC Control (MR22 OP[5:4]), WCK-RDQS_t/Parity Training (MR46 OP[2]), and Read/Write-based WCK-RDQS_training mode (MR26 OP[7]). Refer to the Command Constraint and AC timing section about the Read to Write Timing (tRTW).

NOTE 3 If changing MR which affects data output condition and/or timing, the delay time from MRR to MRW applies an equation as follows. Refer to Table 353 a specific MR bits.
CKR=4:1:
RL+BL/n_max+Max[RU(tWCKDQO(max)/tCK),RD(tWCKPST(max)/tCK)]+RU(ODT_RDon(max))+2
CKR=2:1:
RL+BL/n_max+Max[RU(tWCKDQO(max)/tCK),RD(tWCKPST(max)/tCK)]+RU(ODT_RDon(max))+3

**Table 353 - MR# and Operand which are affected data output condition and/or timing**

| Function | MR# & Operand |
|---|---|
| RL & nRTP | MR2 OP[3:0] |
| PDDS | MR3 OP[2:0] |
| BK/BG ORG | MR3 OP[4:3] |
| DBI-RD | MR3 OP[6] |
| DBI-WR | MR3 OP[7] |
| RPST Mode | MR10 OP[0] |
| WCK PST | MR10 OP[3:2] |
| RDQS PRE | MR10 OP[5:4] |
| RDQS PST | MR10 OP[7:6] |
| NT ODT | MR11 OP[3] |
| DMI Mode select | MR13 OP[4] |
| DMD | MR13 OP[5] |
| SoC ODT | MR17 OP[2:0] |
| WCK ODT | MR18 OP[2:0] |
| WCK FM | MR18 OP[3] |
| WCK ON | MR18 OP[4] |
| CKR (WCK to CK frequency ratio) | MR18 OP[7] |
| RDQS | MR20 OP[1:0] |
| WCK Mode | MR20 OP[3:2] |
| RDCFE | MR21 OP[5] |
| WECC | MR22 OP[5:4] |
| RECC | MR22 OP[7:6] |
| Read/Write-based WCK-RDQS_t Training | MR26 OP[7] |
| NT DQ ODT | MR41 OP[7:5] |
| WCK-DQS_t/Parity Training | MR46 OP[2] |

## 8.6 Rank to Rank Command Timing Constraints

**Table 354 - Command Timing Constraints in case of Different Ranks, "DQ ODT ON and NT-ODT OFF" setting for both ranks, CAS-WS_FS Broadcast ON, Link ECC OFF**

| Next CMD / Current CMD | READ or RFF or MRR or RDC | WRITE or MASK WRITE or WFF | CAS (WS_WR) | CAS (WS_RD) | CAS (WS_FS) |
|---|---|---|---|---|---|
| READ (BL16 or BL32) | BL/n_min + **1**[2] + RU((tRPST+tRPRE – 0.5*tWCK)/tCK) | RL + BL/n_min + RU(tWCK2DQO(max)/tCK) – ODTLon – RD(tODTon(min)/tCK) + 1[4] | illegal | illegal | illegal |
| RFF or MRR or RDC (BL16) | BL/n_min + **1**[2] + RU((tRPST+tRPRE – 0.5*tWCK)/tCK) | RL + BL/n_min + RU(tWCK2DQO(max)/tCK) – ODTLon – RD(tODTon(min)/tCK) + 1[4] | illegal | illegal | illegal |
| WRITE (BL16 or BL32) | ODTLoff + RU(tODToff(max)/tCK) – RL[5] | ODTLoff + RU(tODToff(max)/tCK) - ODTLon | illegal | illegal | illegal |
| MASK WRITE (BL16) | ODTLoff + RU(tODToff(max)/tCK) – RL[5] | ODTLoff + RU(tODToff(max)/tCK) - ODTLon | illegal | illegal | illegal |
| WFF (BL16) | ODTLoff + RU(tODToff(max)/tCK) – RL[5] | ODTLoff + RU(tODToff(max)/tCK) - ODTLon | illegal | illegal | illegal |

NOTE 1 Next command is issued to a different rank.

NOTE 2 RU(tWCK2DQO_rank2rank(max)/tCK) = 1. The same voltage and temperature are applied to multi ranks DQ bytes per channel within a package consisting of the same design dies.

NOTE 3 RD(tWCK2DQO(min)/tCK) = 0.

NOTE 4 In case of Link ECC enabled, an additional RU((tRPST-0.5*tWCK)/tCK) delay should be added because RDQS_t is used for ECC parity input.

NOTE 5 In case of Link ECC enabled, an additional RU(tRPRE/tCK) delay should be added because RDQS_t is used for ECC parity input.

NOTE 6 Rank to Rank command timing constraints in Rank to Rank Command Timing Constraints Table 354 is for LPDDR5 users design and consideration only.

NOTE 7 In case of RDQS disabled (MR20 OP[1:0]=$00_B$), tRPRE and tRPST delay should be 0.

**Table 355 - Command Timing Constraints in case of Different Ranks, "DQ ODT OFF and NT-ODT OFF" setting for both ranks, CAS-WS_FS Broadcast ON, Link ECC OFF**

| Next CMD / Current CMD | READ or RFF or MRR or RDC | WRITE or MASK WRITE or WFF | CAS (WS_WR) | CAS (WS_RD) | CAS (WS_FS) |
|---|---|---|---|---|---|
| READ (BL16 or BL32) | BL/n_min + **1**[2] + RU((tRPST+tRPRE – 0.5*tWCK)/tCK) | RL + BL/n_min + RU(tWCK2DQO(max)/tCK) + RU((tRPST -0.5*tWCK)/tCK) – WL[5] | illegal | illegal | illegal |
| RFF or MRR or RDC (BL16) | BL/n_min + **1**[2] + RU((tRPST+tRPRE – 0.5*tWCK)/tCK) | RL + BL/n_min + RU(tWCK2DQO(max)/tCK) + RU((tRPST -0.5*tWCK)/tCK) – WL[5] | illegal | illegal | illegal |
| WRITE (BL16 or BL32) | WL + BL/n_min + 1[3] – RL[6] | BL/n_min +1[4] | illegal | illegal | illegal |
| MASK WRITE (BL16) | WL + BL/n_min + 1[3] – RL[6] | BL/n_min +1[4] | illegal | illegal | illegal |
| WFF (BL16) | WL + BL/n_min + 1[3] – RL[6] | BL/n_min +1[4] | illegal | illegal | illegal |

NOTE 1 Next command is issued to a different rank.

NOTE 2 RU(tWCK2DQO_rank2rank(max)/tCK) = 1. The same voltage and temperature are applied to multi ranks DQ bytes per channel within a package consisting of the same design dies.

NOTE 3 RU(tWCK2DQI(max)/tCK) = 1.

NOTE 4 RU(tWCK2DQI_rank2rank(max)/tCK) = 1. The same voltage and temperature are applied to multi ranks DQ bytes per channel within a package consisting of the same design dies. If LPDDR5 DFE feature is enabled, an additional timing delay may be required like RU[(tWCK2DQI(max) + tDPRE)/tCK].

NOTE 5 If Link ECC enabled, an additional RU((tRPST-0.5*tWCK)/tCK) delay should be added because RDQS_t is used for ECC parity input.

NOTE 6 If Link ECC enabled, an additional RU(tRPRE/tCK) delay should be added because RDQS_t is used for ECC parity input.

NOTE 7 In case of RDQS disabled (MR20 OP[1:0]=$00_B$), tRPRE and tRPST delay should be 0.

NOTE 8 Rank to Rank command timing constraints in Table 355 is for LPDDR5 users design and consideration only.

**Table 356 - Command Timing Constraints in case of Different Ranks, "DQ ODT ON and NT-ODT OFF" or "DQ ODT ON and NT-ODT ON" setting for both ranks, CAS-WS_FS Broadcast OFF, Link ECC OFF or ON**

| Next CMD / Current CMD | READ or RFF or MRR or RDC | WRITE or MASK WRITE or WFF | CAS (WS_WR) | CAS (WS_RD) | CAS (WS_FS) |
|---|---|---|---|---|---|
| READ (BL16 or BL32) | illegal | illegal | RL + BL/n_max + RU((tWCKPST - 0.5*tWCK)/tCK) – min[(ODTLon + RD(tODTon(min)/tCK)), tWCKENL_WR] | RL + BL/n_max + RU((tWCKPST - 0.5*tWCK)/tCK) – tWCKENL_RD | RL + BL/n_max + RU((tWCKPST - 0.5*tWCK)/tCK) – tWCKENL_FS |
| RFF or MRR or RDC (BL16) | illegal | illegal | RL + BL/n_max + RU((tWCKPST - 0.5*tWCK)/tCK) – min[(ODTLon + RD(tODTon(min)/tCK)), tWCKENL_WR] | RL + BL/n_max + RU((tWCKPST - 0.5*tWCK)/tCK) – tWCKENL_RD | RL + BL/n_max + RU((tWCKPST - 0.5*tWCK)/tCK) – tWCKENL_FS |
| WRITE (BL16 or BL32) | illegal | illegal | WL + BL/n_max + max[RU(tODToff(max)/tCK), RU((tWCKPST - 0.5*tWCK)/tCK)] – tWCKELN_WR | WL + BL/n_max + max[RU(tODToff(max)/tCK), RU((tWCKPST - 0.5*tWCK)/tCK)] – tWCKENL_RD | WL + BL/n_max + max[RU(tODToff(max)/tCK), RU((tWCKPST - 0.5*tWCK)/tCK)] – tWCKENL_FS |
| MASK WRITE or WFF (BL16) | illegal | illegal | WL + BL/n_max + max[RU(tODToff(max)/tCK), RU((tWCKPST - 0.5*tWCK)/tCK)] – tWCKELN_WR | WL + BL/n_max + max[RU(tODToff(max)/tCK), RU((tWCKPST - 0.5*tWCK)/tCK)] – tWCKENL_RD | WL + BL/n_max + max[RU(tODToff(max)/tCK), RU((tWCKPST - 0.5*tWCK)/tCK)] – tWCKENL_FS |

NOTE 1 Next command is issued to a different rank.

NOTE 2 Rank to Rank command timing constraints in Table 356 is for LPDDR5 users design and consideration only.

**Table 357 - Command Timing Constraints in case of Different Ranks, "DQ ODT OFF and NT-ODT OFF" setting for both ranks, CAS-WS_FS Broadcast OFF, Link ECC OFF or ON**

| Next CMD / Current CMD | READ or RFF or MRR or RDC | WRITE or MASK WRITE or WFF | CAS (WS_WR) | CAS (WS_RD) | CAS (WS_FS) |
|---|---|---|---|---|---|
| READ (BL16 or BL32) | illegal | illegal | RL + BL/n_max + RU((tWCKPST - 0.5*tWCK)/tCK) – tWCKENL_WR | RL + BL/n_max + RU((tWCKPST - 0.5*tWCK)/tCK) – tWCKENL_RD | RL + BL/n_max + RU((tWCKPST - 0.5*tWCK)/tCK) – tWCKENL_FS |
| RFF or MRR or RDC (BL16) | illegal | illegal | RL + BL/n_max + RU((tWCKPST - 0.5*tWCK)/tCK) – tWCKENL_WR | RL + BL/n_max + RU((tWCKPST - 0.5*tWCK)/tCK) – tWCKENL_RD | RL + BL/n_max + RU((tWCKPST - 0.5*tWCK)/tCK) – tWCKENL_FS |
| WRITE (BL16 or BL32) | illegal | illegal | WL + BL/n_max + RU((tWCKPST - 0.5*tWCK)/tCK) – tWCKENL_WR | WL + BL/n_max + RU((tWCKPST - 0.5*tWCK)/tCK) – tWCKENL_RD | WL + BL/n_max + RU((tWCKPST - 0.5*tWCK)/tCK) – tWCKENL_FS |
| MASK WRITE or WFF (BL16) | illegal | illegal | WL + BL/n_max + RU((tWCKPST - 0.5*tWCK)/tCK) – tWCKENL_WR | WL + BL/n_max + RU((tWCKPST - 0.5*tWCK)/tCK) – tWCKENL_RD | WL + BL/n_max + RU((tWCKPST - 0.5*tWCK)/tCK) – tWCKENL_FS |

NOTE 1 Next command is issued to a different rank.

NOTE 2 Rank to Rank command timing constraints in Table 357 is for LPDDR5 users design and consideration only.

**Table 358 - Command Timing Constraints in case of Different Ranks, "DQ ODT ON and NT-ODT ON" setting for both ranks, CAS-WS_FS Broadcast ON, Link ECC OFF**

| Next CMD / Current CMD | READ or RFF or MRR or RDC | WRITE or MASK WRITE or WFF | CAS (WS_WR) | CAS (WS_RD) | CAS (WS_FS) |
|---|---|---|---|---|---|
| READ (BL16 or BL32) | ODTLon_RD[4] – ODTLoff_RD[4] | RL + BL/n_min + RU(tWCK2DQO(max)/tCK) – ODTLon – RD(tODTon(min)/tCK) + 1[2] | illegal | illegal | illegal |
| RFF or MRR or RDC (BL16) | ODTLon_RD[4] – ODTLoff_RD[4] | RL + BL/n_min + RU(tWCK2DQO(max)/tCK) – ODTLon – RD(tODTon(min)/tCK) + 1[2] | illegal | illegal | illegal |
| WRITE (BL16 or BL32) | ODTLoff + RU(tODToff(max)/tCK) – RL[5] | ODTLoff + RU(tODToff(max)/tCK) - ODTLon | illegal | illegal | illegal |
| MASK WRITE (BL16) | ODTLoff + RU(tODToff(max)/tCK) – RL[5] | ODTLoff + RU(tODToff(max)/tCK) - ODTLon | illegal | illegal | illegal |
| WFF (BL16) | ODTLoff + RU(tODToff(max)/tCK) – RL[5] | ODTLoff + RU(tODToff(max)/tCK) - ODTLon | illegal | illegal | illegal |

NOTE 1 Next command is issued to a different rank.

NOTE 2 In case of MR0 OP[0]=0B (Same DQ & RDQS NT-ODT timing) and/or Link ECC ON, an additional RU((tRPST-0.5*tWCK)/tCK) delay should be added.

NOTE 3 RD(tWCK2DQO(min)/tCK) = 0.

NOTE 4 ODTLon_RD and ODTLoff_RD should be ODTLon_RD_RDQS and ODTLoff_RD_RDQS respectively in case of MR0 OP[0]=$1_B$.

NOTE 5 In case of MR0 OP[0]=0B (Same DQ & RDQS NT-ODT timing) and/or Link ECC ON, an additional RU(tRPRE/tCK) delay should be added.

NOTE 6 Rank to Rank command timing constraints in Table 358 is for LPDDR5 users design and consideration only.

# 9 AC Timing

## 9.1 Core AC Timing Parameters by Speed Grade

The two basic Core AC timing tables and its derivation Core AC timing tables are included this subclause. The SDRAM status for one basic Core AC timing table is x16, DVFSC is disabled and Link ECC is disabled and the SDRAM status for other basic Core AC timing table is x16, DVFSC is enabled and Link ECC is disabled. Byte mode (x8) and/or Link ECC is enabled affects tWR and tWTR value, which is described to the derivation tables.

### 9.1.1 Timing table for x16, DVFSC Disabled & Write Link ECC Disabled

**Table 359 — x16 Core Timing for BG mode: DVFSC Disabled & Write Link ECC Disabled**

| Item | Symbol | Min/ Max | CK Frequency (MHz) | | | | | | | | | | | | Unit | Notes |
|---|---|---|---|---|---|---|---|---|---|---|---|---|---|---|---|---|
| | | | 67 | 133 | 200 | 266 | 344 | 400 | 467 | 533 | 600 | 688 | 750 | 800 | | |
| Core Timing for BG mode | | | | | | | | | | | | | | | | |
| ACTIVATE-to-ACTIVATE command period (same bank) | tRC | Min | tRAS + tRPab with all-bank precharge<br>tRAS + tRPpb with per-bank precharge | | | | | | | | | | | | - | |
| RAS-to-CAS delay | tRCD | Min | max(18ns, 2nCK) | | | | | | | | | | | | - | |
| Row precharge time (all banks) | tRPab | Min | max(21ns, 2nCK) | | | | | | | | | | | | - | |
| Row precharge time (single bank) | tRPpb | Min | max(18ns, 2nCK) | | | | | | | | | | | | - | |
| Row active time | tRAS | Min | max(42ns, 3nCK) | | | | | | | | | | | | - | |
| | | Max | min(9 * tREFI * Refresh Rate, 70.2) µs | | | | | | | | | | | | - | |
| WRITE recovery time | tWR | Min | max(34ns, 3nCK) | | | | | | | | | | | | - | |
| Active bank-A to active bank-B | tRRD | Min | max(5ns, 2nCK) | | | | | | | | | | | | - | |
| Four-bank ACTIVATE window | tFAW | Min | 20 | | | | | | | | | | | | ns | |
| READ Burst end to PRECHARGE command delay | tRBTP | Min | max(7.5ns, 4nCK) – 4nCK(CKR=2:1)<br>max(7.5ns, 2nCK) – 2nCK(CKR=4:1) | | | | | | | | | | | | - | |
| WRITE-to-READ delay | tWTR_S | Min | max(6.25ns, 4nCK) | | | | | | | | | | | | - | |
| | tWTR_L | Min | max(12ns, 4nCK) | | | | | | | | | | | | - | |
| Precharge to Precharge Delay | tPPD | Min | 2 | | | | | | | | | | | | nCK | |

**Table 360 — x16 Core Timing for 16B mode: DVFSC Disabled & Write Link ECC Disabled**

| Item | Symbol | Min/ Max | CK Frequency (MHz) | | | | | | | | | | | | Unit | Notes |
|---|---|---|---|---|---|---|---|---|---|---|---|---|---|---|---|---|
| | | | 67 | 133 | 200 | 266 | 344 | 400 | 467 | 533 | 600 | 688 | 750 | 800 | | |
| Core Timing for 16B mode | | | | | | | | | | | | | | | | |
| WRITE-to-READ delay | tWTR | Min | max(12ns, 4nCK) | | | | | | | | | | | | - | |

NOTE 1 The rest of the Core AC timing is the same as BG mode: Table 359.

**Table 361 — x16 Core Timing for 8B mode: DVFSC Disabled & Write Link ECC Disabled**

| Item | Symbol | Min/ Max | CK Frequency (MHz) | | | | | | | | | | | | Unit | Notes |
|---|---|---|---|---|---|---|---|---|---|---|---|---|---|---|---|---|
| | | | 67 | 133 | 200 | 266 | 344 | 400 | 467 | 533 | 600 | 688 | 750 | 800 | | |
| Core Timing for 8B mode | | | | | | | | | | | | | | | | |
| Active bank-A to active bank-B | tRRD | Min | max(10ns, 2nCK) | | | | | | | | | | | | - | |
| Four-bank ACTIVATE window | tFAW | Min | 40 | | | | | | | | | | | | ns | |
| WRITE-to-READ delay | tWTR | Min | max(12ns, 4nCK) | | | | | | | | | | | | - | |

NOTE 1 The rest of the Core AC timing is the same as BG mode: Table 359.

#### 9.1.1.1 Timing Table for x8 (Byte Mode) SDRAM

**Table 362 — Byte Mode Core Timing for BG mode: DVFSC Disabled & Write Link ECC Disabled**

| Item | Symbol | Min/ Max | CK Frequency (MHz) | | | | | | | | | | | | Unit | Notes |
|---|---|---|---|---|---|---|---|---|---|---|---|---|---|---|---|---|
| | | | 67 | 133 | 200 | 266 | 344 | 400 | 467 | 533 | 600 | 688 | 750 | 800 | | |
| Core Timing for BG mode | | | | | | | | | | | | | | | | |
| WRITE recovery time | tWR | Min | max(36ns, 3nCK) | | | | | | | | | | | | - | |
| WRITE-to-READ delay | tWTR_S | Min | max(8.25ns, 4nCK) | | | | | | | | | | | | - | |
| | tWTR_L | Min | max(14ns, 4nCK) | | | | | | | | | | | | - | |

NOTE 1 The rest of the Core AC timing is the same as BG mode: Table 359.

**Table 363 — Byte Mode Core Timing for 16B mode: DVFSC Disabled & Write Link ECC Disabled**

| Item | Symbol | Min/ Max | CK Frequency (MHz) | | | | | | | | | | | | Unit | Notes |
|---|---|---|---|---|---|---|---|---|---|---|---|---|---|---|---|---|
| | | | 67 | 133 | 200 | 266 | 344 | 400 | 467 | 533 | 600 | 688 | 750 | 800 | | |
| Core Timing for 16B mode | | | | | | | | | | | | | | | | |
| WRITE recovery time | tWR | Min | max(36ns, 3nCK) | | | | | | | | | | | | - | |
| WRITE-to-READ delay | tWTR | Min | max(14ns, 4nCK) | | | | | | | | | | | | - | |

NOTE 1 The rest of the Core AC timing is the same as BG mode: Table 359.

**Table 364 — Byte Mode Core Timing for 8B mode: DVFSC Disabled & Write Link ECC Disabled**

| Item | Symbol | Min/ Max | CK Frequency (MHz) | | | | | | | | | | | | Unit | Notes |
|---|---|---|---|---|---|---|---|---|---|---|---|---|---|---|---|---|
| | | | 67 | 133 | 200 | 266 | 344 | 400 | 467 | 533 | 600 | 688 | 750 | 800 | | |
| Core Timing for 8B mode | | | | | | | | | | | | | | | | |
| Active bank-A to active bank-B | tRRD | Min | max(10ns, 2nCK) | | | | | | | | | | | | - | |
| Four-bank ACTIVATE window | tFAW | Min | 40 | | | | | | | | | | | | ns | |
| WRITE recovery time | tWR | Min | max(36ns, 3nCK) | | | | | | | | | | | | - | |
| WRITE-to-READ delay | tWTR | Min | max(14ns, 4nCK) | | | | | | | | | | | | - | |

NOTE 1 The rest of the Core AC timing is the same as BG mode: Table 359.

### 9.1.1.2 Timing Table for Write Link ECC is enabled

**Table 365 — x16 Core Timing for BG mode: DVFSC Disabled & Write Link ECC Enabled**

| Item | Symbol | Min/ Max | CK Frequency (MHz) | | | | | | | | | | | | Unit | Notes |
|---|---|---|---|---|---|---|---|---|---|---|---|---|---|---|---|---|
| | | | 67 | 133 | 200 | 266 | 344 | 400 | 467 | 533 | 600 | 688 | 750 | 800 | | |
| Core Timing for BG mode | | | | | | | | | | | | | | | | |
| WRITE recovery time | tWR | Min | max(38ns, 3nCK) | | | | | | | | | | | | - | |
| WRITE-to-READ delay | tWTR_S | Min | max(10.25ns, 4nCK) | | | | | | | | | | | | - | |
| | tWTR_L | Min | max(16ns, 4nCK) | | | | | | | | | | | | - | |

NOTE 1 The rest of the Core AC timing is the same as BG mode: Table 359.

**Table 366 — x16 Core Timing for 16B mode: DVFSC Disabled & Write Link ECC Enabled**

| Item | Symbol | Min/ Max | CK Frequency (MHz) | | | | | | | | | | | | Unit | Notes |
|---|---|---|---|---|---|---|---|---|---|---|---|---|---|---|---|---|
| | | | 67 | 133 | 200 | 266 | 344 | 400 | 467 | 533 | 600 | 688 | 750 | 800 | | |
| Core Timing for 16B mode | | | | | | | | | | | | | | | | |
| WRITE recovery time | tWR | Min | max(38ns, 3nCK) | | | | | | | | | | | | - | |
| WRITE-to-READ delay | tWTR | Min | max(16ns, 4nCK) | | | | | | | | | | | | - | |

NOTE 1 The rest of the Core AC timing is the same as BG mode: Table 359.

**Table 367 — x16 Core Timing for 8B mode: DVFSC Disabled & Write Link ECC Enabled**

| Item | Symbol | Min/ Max | CK Frequency (MHz) | | | | | | | | | | | | Unit | Notes |
|---|---|---|---|---|---|---|---|---|---|---|---|---|---|---|---|---|
| | | | 67 | 133 | 200 | 266 | 344 | 400 | 467 | 533 | 600 | 688 | 750 | 800 | | |
| Core Timing for 8B mode | | | | | | | | | | | | | | | | |
| Active bank-A to active bank-B | tRRD | Min | max(10ns, 2nCK) | | | | | | | | | | | | - | |
| Four-bank ACTIVATE window | tFAW | Min | 40 | | | | | | | | | | | | ns | |
| WRITE recovery time | tWR | Min | max(38ns, 3nCK) | | | | | | | | | | | | - | |
| WRITE-to-READ delay | tWTR | Min | max(16ns, 4nCK) | | | | | | | | | | | | - | |

#### 9.1.1.3 Timing Table for x8 (Byte Mode) SDRAM and Write Link ECC is enabled

**Table 368 — Byte Mode Core Timing for BG mode: DVFSC Disabled & Write Link ECC Enabled**

| Item | Symbol | Min/ Max | CK Frequency (MHz) | | | | | | | | | | | | Unit | Notes |
|---|---|---|---|---|---|---|---|---|---|---|---|---|---|---|---|---|
| | | | 67 | 133 | 200 | 266 | 344 | 400 | 467 | 533 | 600 | 688 | 750 | 800 | | |
| Core Timing for BG mode | | | | | | | | | | | | | | | | |
| WRITE recovery time | tWR | Min | max(40ns, 3nCK) | | | | | | | | | | | | - | |
| WRITE-to-READ delay | tWTR_S | Min | max(12.25ns, 4nCK) | | | | | | | | | | | | - | |
| | tWTR_L | Min | max(18ns, 4nCK) | | | | | | | | | | | | - | |

NOTE 1 The rest of the Core AC timing is the same as BG mode: Table 359.

**Table 369 — Byte Mode Core Timing for 16B mode: DVFSC Disabled & Write Link ECC Enabled**

| Item | Symbol | Min/ Max | CK Frequency (MHz) | | | | | | | | | | | | Unit | Notes |
|---|---|---|---|---|---|---|---|---|---|---|---|---|---|---|---|---|
| | | | 67 | 133 | 200 | 266 | 344 | 400 | 467 | 533 | 600 | 688 | 750 | 800 | | |
| Core Timing for 16B mode | | | | | | | | | | | | | | | | |
| WRITE recovery time | tWR | Min | max(40ns, 3nCK) | | | | | | | | | | | | - | |
| WRITE-to-READ delay | tWTR | Min | max(18ns, 4nCK) | | | | | | | | | | | | - | |

NOTE 1 The rest of the Core AC timing is the same as BG mode: Table 359.

**Table 370 — Byte Mode Core Timing for 8B mode: DVFSC Disabled & Write Link ECC Enabled**

| Item | Symbol | Min/ Max | CK Frequency (MHz) | | | | | | | | | | | | Unit | Notes |
|---|---|---|---|---|---|---|---|---|---|---|---|---|---|---|---|---|
| | | | 67 | 133 | 200 | 266 | 344 | 400 | 467 | 533 | 600 | 688 | 750 | 800 | | |
| Core Timing for 8B mode | | | | | | | | | | | | | | | | |
| Active bank-A to active bank-B | tRRD | Min | max(10ns, 2nCK) | | | | | | | | | | | | - | |
| Four-bank ACTIVATE window | tFAW | Min | 40 | | | | | | | | | | | | ns | |
| WRITE recovery time | tWR | Min | max(40ns, 3nCK) | | | | | | | | | | | | - | |
| WRITE-to-READ delay | tWTR | Min | max(18ns, 4nCK) | | | | | | | | | | | | - | |

NOTE 1 The rest of the Core AC timing is the same as BG mode: Table 359.

### 9.1.2 Timing table for x16, DVFSC Enabled & Write Link ECC Disabled

**Table 371 — x16 Core Timing for 16B mode: DVFSC Enabled & Write Link ECC Disabled**

| Item | Symbol | Min/ Max | CK Frequency (MHz) | | | | | | | | | | | | Unit | Notes |
|---|---|---|---|---|---|---|---|---|---|---|---|---|---|---|---|---|
| | | | 67 | 133 | 200 | 266 | 344 | 400 | 467 | 533 | 600 | 688 | 750 | 800 | | |
| Core Timing for 16B mode | | | | | | | | | | | | | | | | |
| ACTIVATE-to-ACTIVATE command period (same bank) | tRC | Min | tRAS + tRPab with all-bank precharge<br>tRAS + tRPpb with per-bank precharge | | | | | | | | | | | | - | |
| RAS-to-CAS delay | tRCD | Min | max(19ns 2nCK) | | | | | | | | | | | | - | |
| Row precharge time (all banks) | tRPab | Min | max(21ns 2nCK) | | | | | | | | | | | | - | |
| Row precharge time (single bank) | tRPpb | Min | max(18ns, 2nCK) | | | | | | | | | | | | - | |
| Row active time | tRAS | Min | max(42ns, 3nCK) | | | | | | | | | | | | - | |
| | | Max | min(9 * tREFI * Refresh Rate, 70.2) µs | | | | | | | | | | | | - | |
| WRITE recovery time | tWR | Min | max(41ns, 3nCK) | | | | | | | | | | | | - | |
| Active bank-A to active bank-B | tRRD | Min | max(5ns, 2nCK) | | | | | | | | | | | | - | |
| Four-bank ACTIVATE window | tFAW | Min | 20 | | | | | | | | | | | | ns | |
| READ Burst end to PRECHARGE command delay | tRBTP | Min | max(8.5ns, 4nCK) – 4nCK (CKR=2:1)<br>max(8.5ns, 2nCK) – 2nCK (CKR=4:1) | | | | | | | | | | | | - | |
| WRITE-to-READ delay | tWTR | Min | max(19ns, 4nCK) | | | | | | | | | | | | - | |
| Precharge to Precharge Delay | tPPD | Min | 2 | | | | | | | | | | | | nCK | |

**Table 372 — x16 Core Timing for 8B mode: DVFSC Enabled & Write Link ECC Disabled**

| Item | Symbol | Min/ Max | CK Frequency (MHz) | | | | | | | | | | | | Unit | Notes |
|---|---|---|---|---|---|---|---|---|---|---|---|---|---|---|---|---|
| | | | 67 | 133 | 200 | 266 | 344 | 400 | 467 | 533 | 600 | 688 | 750 | 800 | | |
| Core Timing for 8B mode | | | | | | | | | | | | | | | | |
| Active bank-A to active bank-B | tRRD | Min | max(10ns, 2nCK) | | | | | | | | | | | | - | |
| Four-bank ACTIVATE window | tFAW | Min | 40 | | | | | | | | | | | | ns | |

NOTE 1 The rest of the Core AC timing is the same as 16B mode: Table 371.

#### 9.1.2.1 Timing Table for x8 (Byte Mode) SDRAM

**Table 373 — Byte Mode Core Timing for 16B mode: DVFSC Enabled & Write Link ECC Disabled**

| Item | Symbol | Min/ Max | CK Frequency (MHz) | | | | | | | | | | | | Unit | Notes |
|---|---|---|---|---|---|---|---|---|---|---|---|---|---|---|---|---|
| | | | 67 | 133 | 200 | 266 | 344 | 400 | 467 | 533 | 600 | 688 | 750 | 800 | | |
| Core Timing for 16B mode | | | | | | | | | | | | | | | | |
| WRITE recovery time | tWR | Min | max(43ns, 3nCK) | | | | | | | | | | | | - | |
| WRITE-to-READ delay | tWTR | Min | max(21ns, 4nCK) | | | | | | | | | | | | - | |

NOTE 1 The rest of the Core AC timing is the same as 16B mode: Table 371.

**Table 374 — Byte Mode Core Timing for 8B mode: DVFSC Enabled & Write Link ECC Disabled**

| Item | Symbol | Min/ Max | CK Frequency (MHz) | | | | | | | | | | | | Unit | Notes |
|---|---|---|---|---|---|---|---|---|---|---|---|---|---|---|---|---|
| | | | 67 | 133 | 200 | 266 | 344 | 400 | 467 | 533 | 600 | 688 | 750 | 800 | | |
| Core Timing for 8B mode | | | | | | | | | | | | | | | | |
| Active bank-A to active bank-B | tRRD | Min | max(10ns, 2nCK) | | | | | | | | | | | | - | |
| Four-bank ACTIVATE window | tFAW | Min | 40 | | | | | | | | | | | | ns | |
| WRITE recovery time | tWR | Min | max(43ns, 3nCK) | | | | | | | | | | | | - | |
| WRITE-to-READ delay | tWTR | Min | max(21ns, 4nCK) | | | | | | | | | | | | - | |

## 9.2 Core AC Temperature derating for AC Timing

**Table 375 — Temperature Derating AC Timing**

| Item | Symbol | Min/ Max | CK Frequency (MHz) | | | | | | | | | | | | Unit | Notes |
|---|---|---|---|---|---|---|---|---|---|---|---|---|---|---|---|---|
| | | | 67 | 133 | 200 | 266 | 344 | 400 | 467 | 533 | 600 | 688 | 750 | 800 | | |
| Temperature Derating | | | | | | | | | | | | | | | | |
| DQ to WCK input offset | tWCK2DQI_HF | Max | TBD | | | | | | | | | | | | ps | |
| | WCK2DQI_LF | Max | TBD | | | | | | | | | | | | ps | |
| WCK to DQ output offset | tWCK2DQO_HF | Max | TBD | | | | | | | | | | | | ps | |
| | tWCK2DQO_LF | Max | TBD | | | | | | | | | | | | ps | |
| RAS-to-CAS delay | tRCD | Min | TBD | | | | | | | | | | | | - | |
| ACTIVATE-to-ACTIVATE command period (same bank) | tRC | Min | TBD | | | | | | | | | | | | - | |
| RAS-to-CAS delay | tRCD | Min | TBD | | | | | | | | | | | | - | |
| Row precharge time (all banks) | tRPab | Min | TBD | | | | | | | | | | | | - | |
| Row precharge time (single bank) | tRPpb | Min | TBD | | | | | | | | | | | | - | |
| Active bank-A to active bank-B | tRRD | Min | TBD | | | | | | | | | | | | - | |

NOTE 1 Timing derating applies for operation at TBD °C to TBD °C.

# 10 Absolute Maximum DC Ratings

Stresses greater than those listed may cause permanent damage to the device. This is a stress rating only, and functional operation of the device at these or any other conditions above those indicated in the operational sections of this specification is not implied. Exposure to absolute maximum rating conditions for extended periods may affect reliability.

**Table 376 — Absolute Maximum DC Ratings**

| Parameter | Symbol | Min | Max | Unit | Note |
|---|---|---|---|---|---|
| VDD1 Supply Voltage relative to VSS | VDD1 | -0.4 | 2.1 | V | 1 |
| VDD2H Supply Voltage relative to VSS | VDD2H | -0.4 | 1.4 | V | 1 |
| VDD2L Supply Voltage relative to VSS | VDD2L | -0.4 | 1.4 | V | 1 |
| VDDQ Supply Voltage relative to VSS | VDDQ | -0.4 | 1.4 | V | 1 |
| Voltage on Any Ball Except VDD1 relative to VSS | VIN, VOUT | -0.4 | 1.4 | V | |
| Storage Temperature | TSTG | -55 | 125 | °C | 2 |

NOTE 1 See "Power-Up, Initialization" in 4.1 for relationships between power supplies.
NOTE 2 Storage Temperature is the case surface temperature on the center/top side of the LPDDR5 device. For the measurement conditions, please refer to JESD51-2A.

# 11 AC and DC Operating Condition

## 11.1 Recommended DC Operating Conditions

**Table 377 - Recommended Voltage operating conditions**

| | | | Low Freq Voltage Spec Freq:DC to 2 MHz | | | | Z(f) Spec Freq: 2 MHz to 10 MHz | | Z(f) Spec Freq: 20 MHz | | |
|---|---|---|---|---|---|---|---|---|---|---|---|
| **DRAM** | **Symbol** | | **Min** | **Typ** | **Max** | **Unit** | Zmax | Unit | Zmax | Unit | Notes |
| Core 1 Power | VDD1 | | 1.7 | 1.8 | 1.95 | V | 100 | mOhm | 170 | mOhm | 1,2,9 |
| Core 2 Power/Input Buffer Power | VDD2H | | 1.01 | 1.05 | 1.12 | V | 40 | mOhm | 80 | mOhm | 1,2,9 |
| | VDD2L | Single Core Power Rail (MR13 OP[7]=$1_B$) | 1.01 | 1.05 | 1.12 | V | 120 | mOhm | 190 | mOhm | 1,2,9 |
| | | Dual Core Power Rail (MR13 OP[7]=$0_B$) | 0.87 | 0.9 | 0.97 | | | | | | |
| I/O Buffer Power | VDDQ | SPEC Range-1 | 0.47 | 0.5 | 0.57 | V | 40 | mOhm | 80 | mOhm | 2,3,6,9 |
| | | Spec Range-2 | 0.27 | 0.3 | 0.37 | V | | | | | 2,4,9 |
| | | Allowable Range | 0.27 | N/A | 0.57 | V | N/A | | N/A | | 5,6,7,8 |

NOTE 1 VDD1 uses significantly less current than VDD2H and VDD2L.
NOTE 2 DC to 2 MHz voltage range includes all noise at DRAM ball, both DC and AC ripple fluctuations. This noise is included in the aperture mask defined by VdIVW.
Refer to Figure 1 DC voltage range.
NOTE 3 SPEC Range 1 is intended for IO operation with both ODT enabled and disabled.
NOTE 4 SPEC Range 2 is intended for IO operation with ODT disabled.
NOTE 5 IO operation at VDDQ levels between outside SPEC Range 1 or SPEC Range 2 is allowed with ODT disabled.
NOTE 6 Allowable range is valid only when DVFSQ enabled.

NOTE 7 100mV tolerance (-30mV/+70mV) is applied to VDDQ allowable ranges. Refer to Figure 2 VDDQ tolerance definition in allowable range.
NOTE 8 Vendors may support 0.6V. VDDQ (typ) as an option. Because ZQ calibration is optimized at VDDQ=0.5V, the output drive strength. May not be guaranteed at VDDQ=0.6V. Refer to a vendor's data sheet.
NOTE 9 Z(f) is defined for all pins per voltage domain per channel. Z(f) does not include the DRAM package and silicon die.

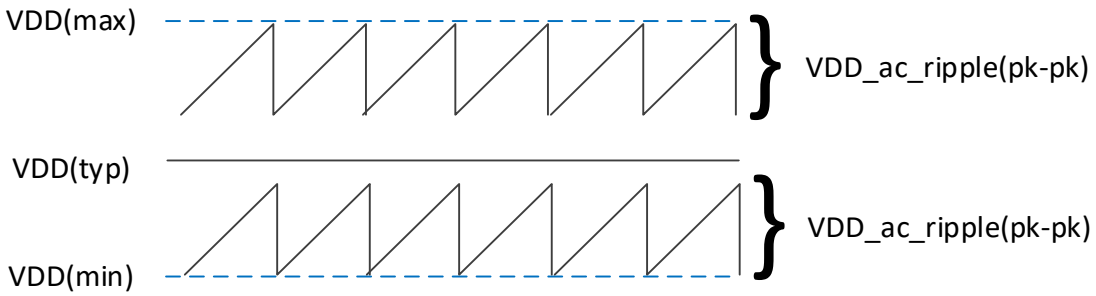


**Figure 237 - DC Voltage Range**

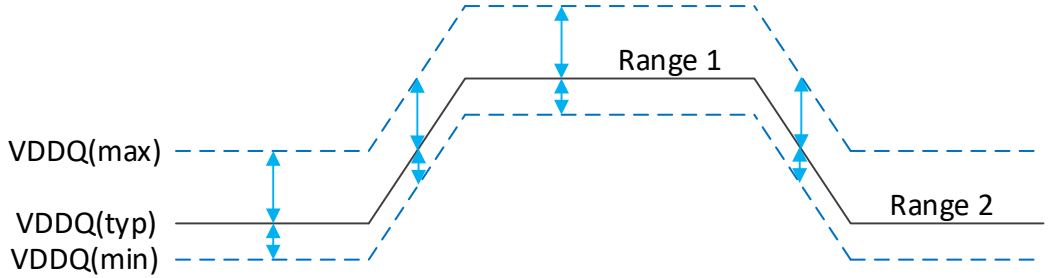


**Figure 238 - VDDQ Tolerance Definition in Allowable Range**

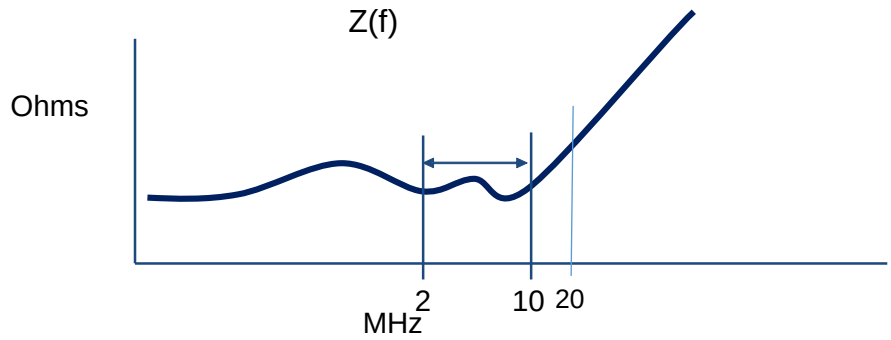


**Figure 239 - Zprofile Z(f) of the system at the DRAM package solder ball (without the DRAM component)**

A simplified electrical system load model for Z(f) with the general frequency response is shown in the figure below. The system resistance and inductance can be scaled to generalize the spec response to the DRAM pins.

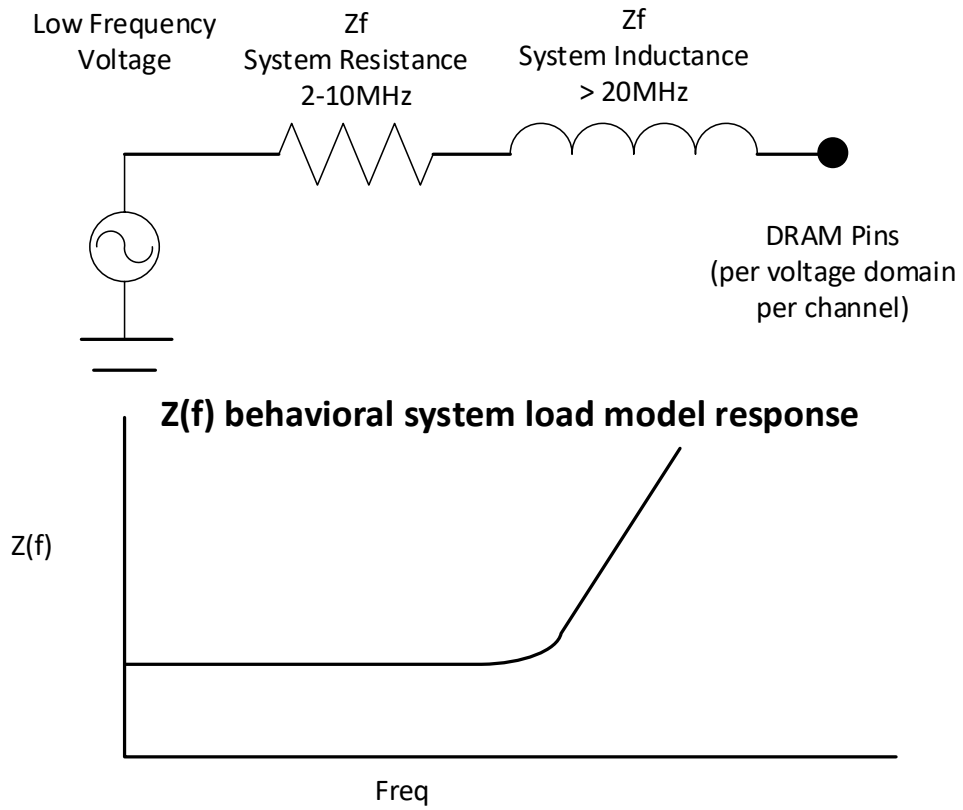


**Figure 240 - A simplified Z(f) system electrical model and frequency response of the behavioral PDN electrical load model without the DRAM component per voltage domain per channel.**

## 11.2 Input Leakage Current

**Table 378 - Input Leakage Current**

| Parameter/Condition | Symbol | Min | Max | Unit | Notes |
|---|---|---|---|---|---|
| Input Leakage Current | $I_L$ | -8 | 8 | uA | 1,2,3 |
| CS Leakage Current | $I_{LCS}$ | -16 | 16 | uA | 1,2,4,5 |

NOTE 1 For CK_t, CK_c, WCK_t, WCK_c, and CA. Any input 0V ≤ VIN ≤ VDDQ (All other pins not under test = 0V).
NOTE 2 For CS and RESET_n. Any input 0V ≤ VIN ≤ VDD2H (All other pins not under test = 0V).
NOTE 3 CA ODT is disabled for CA, CK ODT is disabled for CK_t and CK_c, and WCK ODT is disabled for WCK_t and WCK_c.
NOTE 4 CS ODT is disabled for CS if optional CS ODT is supported.
NOTE 5 ILCS is applied when CS ODT is supported. If CS ODT is not supported, the input leakage current for CS shall meet IL.

## 11.3 Input/Output Leakage Current

**Table 379 — Input/Output Leakage Current**

| Parameter/Condition | Symbol | Min | Max | Unit | Notes |
|---|---|---|---|---|---|
| Input/Output Leakage Current | IOZ | -10 | 10 | uA | 1,2 |

NOTE 1 For DQ, RDQS_t, RDQS_c and DMI. Any I/O 0V ≤ VOUT ≤ VDDQ.
NOTE 2 I/Os status are disabled: High Impedance and ODT Off.

## 11.4 Operating Temperature Range

**Table 380 — Operating Temperature Range**

| Parameter / Condition | Symbol | Min | Max | Unit | Notes |
|---|---|---|---|---|---|
| Standard | $T_{oper_standard}$ | -25 | 85 | °C | 1,2,3 |
| Elevated | $T_{oper_elevated}$ | -25 | 105 | °C | 1,2,3 |

NOTE 1 Operating Temperature is the case surface temperature on the center-top side of the LPDDR5 device. For the measurement conditions, please refer to JESD51-2A.

NOTE 2 Some applications require operation of LPDDR5 in the maximum temperature conditions in the Elevated Temperature Range between 85°C and 105°C case temperature. For LPDDR5 devices, derating may be necessary to operate in this range.

NOTE 3 Either the device case temperature rating or the temperature sensor may be used to set an appropriate refresh rate, determine the need for AC timing de-rating and/or monitor the operating temperature. When using the temperature sensor, the actual device case temperature may be higher than the TOPER rating that applies for the Standard or Elevated Temperature Ranges. For example, TCASE may be above 85°C when the temperature sensor indicates a temperature of less than 85°C.

### 11.4.1 Operating Temperature Range (Automotive spec addendum only)

**Table 381 — Operating Temperature Range**

| Parameter / Condition | Symbol | Min | Max | Unit | Notes |
|---|---|---|---|---|---|
| Standard | $T_{oper_standard}$ | -25 | 85 | °C | 1 |
| Automotive Grade1 | $T_{oper_auto_grade1}$ | -40 | 125 | °C | 1,2,3,4 |
| Automotive Grade 2 | $T_{oper_auto_grade2}$ | -40 | 105 | °C | 1,2,3,4 |
| Automotive Grade 3 | $T_{oper_auto_grade3}$ | -40 | 85 | °C | 1,2,3,4 |

NOTE 1 Operating Temperature is the case surface temperature on the center-top side of the LPDDR5 device. For the measurement conditions, please refer to JESD51-2A.

NOTE 2 Automotive: Some applications require operation of LPDDR5 in the maximum temperature conditions over 85°C. For LPDDR5 devices, de-rating may be necessary to operate in this range (over 85°C).

NOTE 3 Either the device case temperature rating or the temperature sensor may be used to set an appropriate refresh rate, determine the need for AC timing de-rating, and/or monitor the operating temperature. When using the temperature sensor, the actual device case temperature may be higher than the TOPER rating that applies for the Standard or automotive grades Temperature Ranges. For example, TCASE may be above 85°C when the temperature sensor indicates a temperature of less than 85°C.

NOTE 4 Automotive temperature condition is only allowed at the limited part which specifies the guarantee in the datasheet.

## 11.5 Electrostatic Discharge Sensitivity Characteristics

**Table 382 — Electrostatic Discharge Sensitivity Characteristics**

| Parameter | Symbol | Min | Max | Unit | Notes |
|---|---|---|---|---|---|
| Human body model (HBM) | $ESD_{HBM}$ | 1000 | | V | 1 |
| Charged-device model (CDM) | $ESD_{CDM}$ | 250 | | V | 2 |

NOTE 1 Refer to ESDA/JEDEC Joint Standard JS-001-2017 for measurement procedures.

NOTE 2 Refer JESD22-A115C for measurement procedures.

# 12 AC and DC Input/Output Measurement levels

## 12.1 1.05V High speed LVCMOS

### 12.1.1 Standard specifications

All voltages are referenced to ground except where noted.

### 12.1.2 Input Level for Reset_n

LPDDR5 uses CMOS with VDD2H Reset_n signaling to ensure stable LPDDR5 reset operation.

**Table 383 — Reset input level specification**

| Item | Symbol | Min/Max | | Unit | Note |
|---|---|---|---|---|---|
| Reset_n ViH | ViH_RS | Min | 0.8xVDD2H | V | |
| | | Max | VDD2H+0.2 | V | 1 |
| Reset_n ViL | ViL_RS | Min | -0.2 | V | 1 |
| | | Max | 0.2xVDD2H | V | |

NOTE 1 Refer LPDDR5 overshoot and undershoot, 12.1.4.

### 12.1.3 Input Level for CS

The definition applies to CS.

**Table 384 — LPDDR5 Input Level for CS**

| Parameter | Symbol | Min | Max | Unit | Note |
|---|---|---|---|---|---|
| Input High Level | $V_{IH}$ | TBD | TBD | V | 1 |
| Input Low Level | $V_{IL}$ | TBD | TBD | V | 1 |

NOTE 1 Refer LPDDR5 AC Over / Undershoot section, 12.1.4.

### 12.1.4 AC Overshoot / Undershoot

#### 12.1.4.1 AC Overshoot / Undershoot

**Table 385 — AC Overshoot / Undershoot**

| Parameter | Specification |
|---|---|
| Maximum Peak Amplitude allowed for overshoot area | 0.35V |
| Maximum Peak Amplitude allowed for undershoot area | 0.35V |
| Maximum overshoot area above VDD2H/VDDQ | 0.8V-ns |
| Maximum undershoot area above VSS | 0.8V-ns |

#### 12.1.4.2 AC Overshoot / Undershoot for LVSTL

**Table 386 — LPDDR5 AC Overshoot / Undershoot for LVSTL**

| Parameter | Min/ Max | Data Rate | | | | Units |
|---|---|---|---|---|---|---|
| | | 1600 | 3200 | 5500 | 6400 | |
| Maximum Peak Amplitude allowed for overshoot area | Max | 0.3 | 0.3 | 0.3 | 0.3 | V |
| Maximum Peak Amplitude allowed for undershoot area | Max | 0.3 | 0.3 | 0.3 | 0.3 | V |
| Maximum overshoot area above VDD2H/VDDQ | Max | 0.1 | 0.1 | 0.1 | 0.1 | V-ns |
| Maximum undershoot area above VSS | Max | 0.1 | 0.1 | 0.1 | 0.1 | V-ns |

### 12.1.4.2 AC Overshoot / Undershoot for LVSTL (Cont'd)

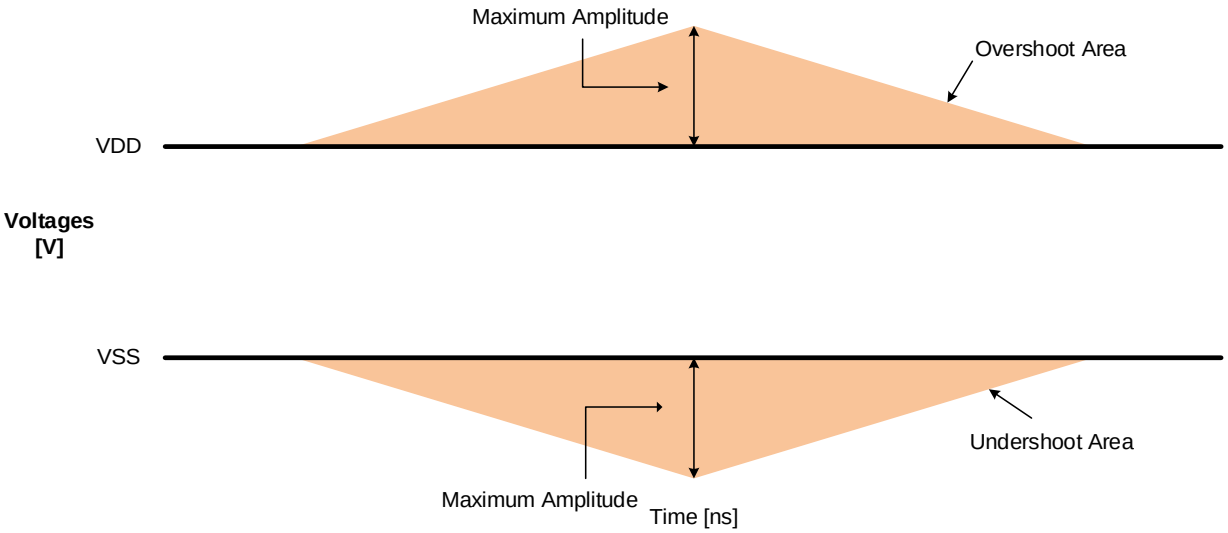


NOTE 1 VDD is VDD2H for CA[6:0] and CK_t/c, CS and RESET_n. VDD is VDDQ for DQ, DMI, RDQS_t, WCK_t/c
NOTE 2 Maximum peak amplitude values are referenced from actual VDD and VSS values.
NOTE 3 Maximum area values are referenced from maximum operating VDD and VSS values.

**Figure 241 — Overshoot and Undershoot Definition**

## 12.2 Differential Input Voltage

### 12.2.1 Differential Input Voltage for CK

The minimum input voltage need to satisfy both Vindiff_CK and Vindiff_CK /2 specification at input receiver and their measurement period is 1tCK. Vindiff_CK is the peak to peak voltage centered on 0 volts differential and Vindiff_CK /2 is max and min peak voltage from 0V.

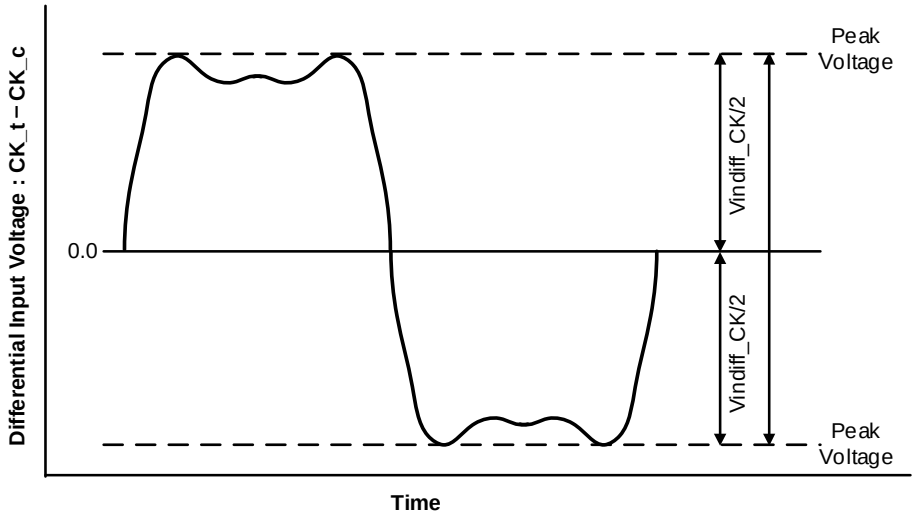


**Figure 242 — CK Differential Input Voltage**

### 12.2.1 Differential Input Voltage for CK (Cont'd)

**Table 387 — CK Differential Input Voltage**

| Parameter | Symbol | Clock Rate | | | | | | Unit | Note |
|---|---|---|---|---|---|---|---|---|---|
| | | 266MHz | | 533MHz | | 800MHz | | | |
| | | Min | Max | Min | Max | Min | Max | | |
| CK Differential Input Voltage | Vindiff_CK | 350 | - | 350 | - | 350 | - | mV | 1,2 |

NOTE 1 Refer to Table 195 to match the clock rate to data rate.
NOTE 2 The peak voltage of Differential CK signals is calculated in a following equation.
Vindiff_CK = (Max Peak Voltage) - (Min Peak Voltage)
Max Peak Voltage = Max(f(t))
Min Peak Voltage = Min(f(t))
f(t) = VCK_t - VCK_c

#### 12.2.1.1 Peak Voltage Calculation Method

The peak voltage of Differential Clock signals are calculated in a following equation.

**VIH.DIFF.Peak Voltage = Max(f(t))**
**VIL.DIFF.Peak Voltage = Min(f(t))**
**f(t) = VCK_t - VCK_c**

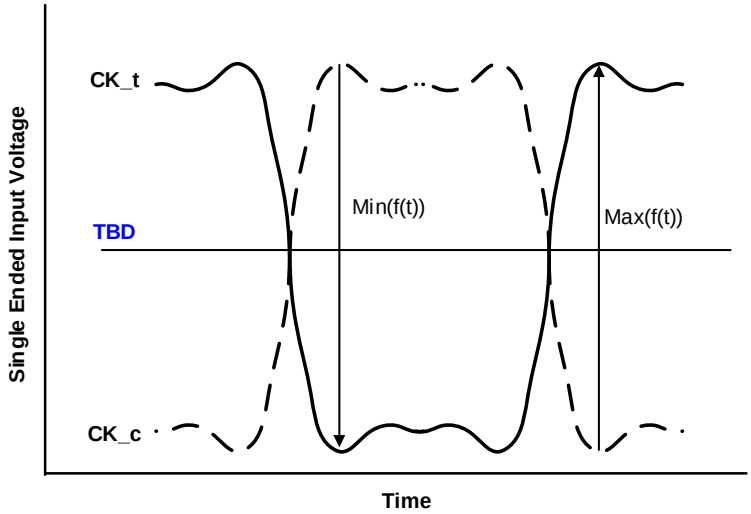


NOTE 1 TBD is LPDDR5 SDRAM internal setting value by Vref training.

**Figure 243 — Definition of differential Clock Peak Voltage**

### 12.2.1.2 Single ended Input Voltage for CK

The minimum input voltage need to satisfy both Vinse_CK, Vinse_CK_High/Low specification at input receiver.

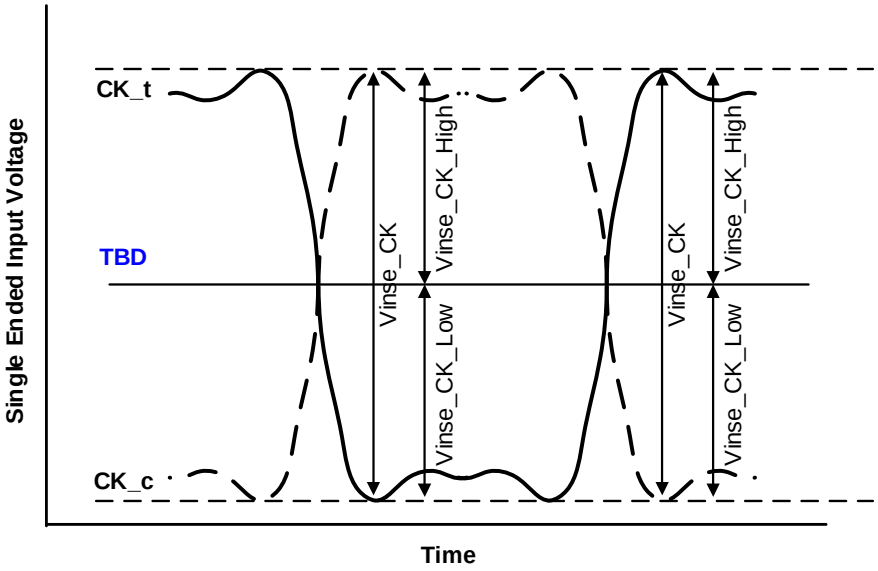


NOTE 1 TBD is LPDDR5 SDRAM internal setting value by Vref training

**Figure 244 — Clock Single ended Input Voltage**

**Table 388 — Clock Single-Ended Input Voltage**

| Parameter | Symbol | Clock Rate | | | | | | Unit | Note |
|---|---|---|---|---|---|---|---|---|---|
| | | 266MHz | | 533MHz | | 800MHz | | | |
| | | Min | Max | Min | Max | Min | Max | | |
| Clock Single-ended input Voltage | Vinse_CK | 175 | - | 175 | - | 175 | - | mV | |
| Clock Single-ended input Voltage High from TBD | Vinse_CK_High | 87.5 | - | 87.5 | - | 87.5 | - | mV | |
| Clock Single-ended input Voltage Low from TBD | Vinse_CK_Low | 87.5 | - | 87.5 | - | 87.5 | - | mV | |

### 12.2.1.3 Differential Input Slew Rate Definition for CK

Input slew rate for differential signals (CK_t, CK_c) are defined and measured as shown in Figure 245 and the following Tables.

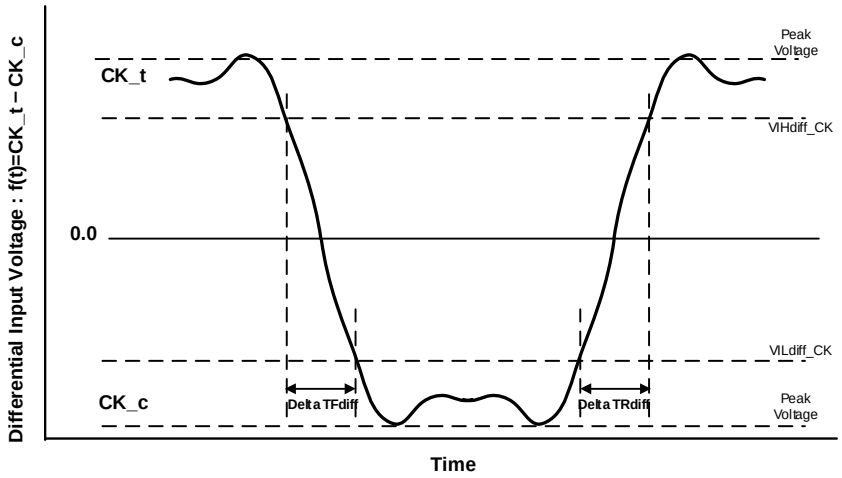


NOTE 1 Differential signal rising edge from VILdiff_CK to VIHdiff_CK must be monotonic slope.
NOTE 2 Differential signal falling edge from VIHdiff_CK to VILdiff_CK must be monotonic slope.

**Figure 245 — Differential Input Slew Rate Definition for CK_t, CK_c**

**Table 389 — Differential Input Slew Rate Definition for CK_t, CK_c**

| Description | From | To | Defined by |
|---|---|---|---|
| Differential input slew rate for rising edge (CK_t - CK_c) | VILdiff_CK | VIHdiff_CK | \|VILdiff_CK - VIHdiff_CK\|/DeltaTRdiff |
| Differential input slew rate for falling edge (CK_t - CK_c) | VIHdiff_CK | VILdiff_CK | \|VILdiff_CK - VIHdiff_CK\|/DeltaTFdiff |

**Table 390 — Differential Input Level for CK_t, CK_c**

| Parameter | Symbol | Clock Rate | | | | | | Unit | Note |
|---|---|---|---|---|---|---|---|---|---|
| | | 266MHz | | 533MHz | | 800MHz | | | |
| | | Min | Max | Min | Max | Min | Max | | |
| Differential Input High | VIHdiff_CK | 145 | - | 145 | - | 145 | - | mV | |
| Differential Input Low | VILdiff_CK | - | -145 | - | -145 | - | -145 | mV | |

**Table 391 — Differential Input Slew Rate for CK_t, CK_c**

| Parameter | Symbol | Clock Rate | | | | | | Unit | Note |
|---|---|---|---|---|---|---|---|---|---|
| | | 266MHz | | 533MHz | | 800MHz | | | |
| | | Min | Max | Min | Max | Min | Max | | |
| Differential Input Slew Rate for Clock | SRIdiff_CK | 2 | 14 | 2 | 14 | 2 | 14 | V/ns | |

### 12.2.1.4 Differential Input Cross Point Voltage for CK

The cross point voltage of differential input signals (CK_t, CK_c) must meet the requirements in Table 392. The differential input cross point voltage VIX is measured from the actual cross point of true and complement signals to the mid-level that is TBD.

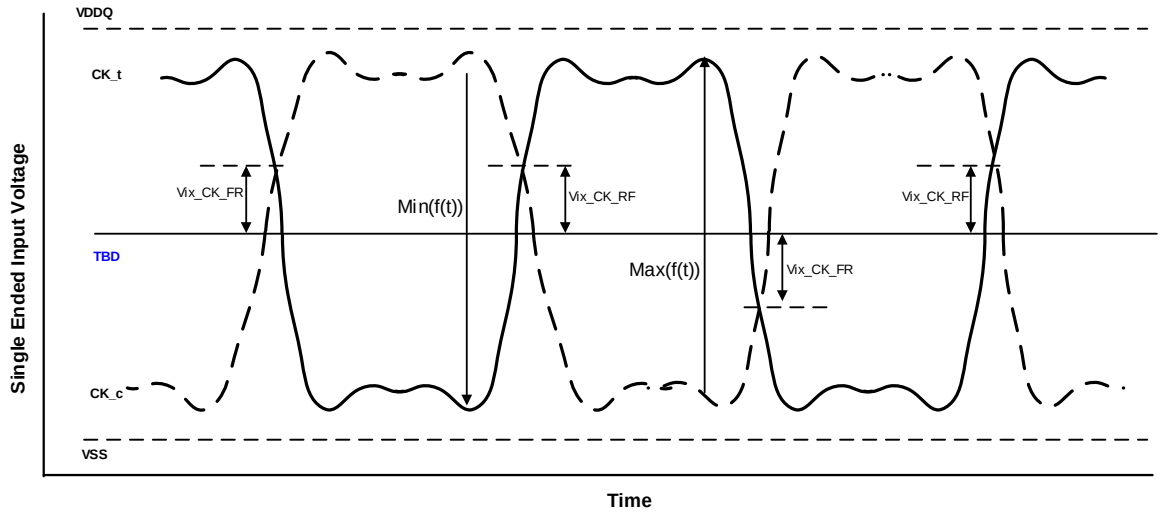


NOTE 1 The base level of Vix_CK_FR/RF is TBD that is LPDDR5 SDRAM internal setting value by Vref training.

**Figure 246 — Differential Input Slew Rate Definition for CK_t, CK_c**

**Table 392 — Cross point voltage for differential input signals (Clock)**

| Parameter | Symbol | Clock Rate | | | | | | Unit | Note |
|---|---|---|---|---|---|---|---|---|---|
| | | 266MHz | | 533MHz | | 800MHz | | | |
| | | Min | Max | Min | Max | Min | Max | | |
| Clock Differential input crosspoint voltage ratio | Vix_CK_ratio | - | 25 | - | 25 | - | 25 | % | 1,2 |

NOTE 1 Vix_CK_Ratio is defined by this equation: Vix_CK_Ratio = Vix_CK_FR/|Min(f(t))|

NOTE 2 Vix_CK_Ratio is defined by this equation: Vix_CK_Ratio = Vix_CK_RF/Max(f(t))

### 12.2.2 Differential Input Voltage for WCK

The minimum input voltage need to satisfy both Vindiff_WCK and Vindiff_WCK /2 specification at input receiver and their measurement period is 1tWCK. Vindiff_WCK is the peak to peak voltage centered on 0 volts differential and Vindiff_WCK /2 is max and min peak voltage from 0V.

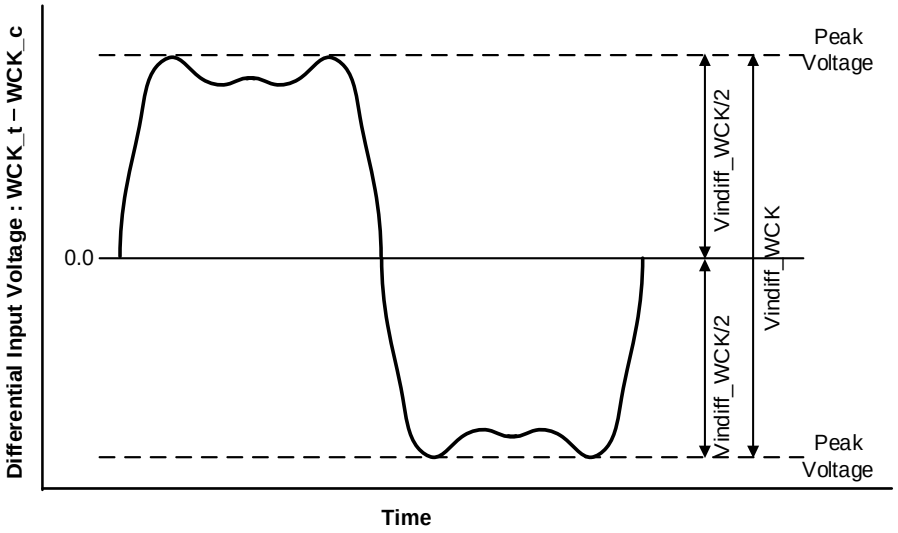


**Figure 247 — WCK Differential Input Voltage**

**Table 393 — WCK differential input voltage**

| Parameter | Symbol | WCK Rate [MHz] | | | | | | | | | | | | Unit | Note |
|---|---|---|---|---|---|---|---|---|---|---|---|---|---|---|---|
| | | 800 | | 1066 | | 1600 | | 2133 | | 2750 | | 3200 | | | |
| | | Min | Max | Min | Max | Min | Max | Min | Max | Min | Max | Min | Max | | |
| WCK Differential Input Voltage | Vindiff_WCK | 300 | - | 300 | - | 300 | - | 280 | - | TBD | - | TBD | - | mV | 1,2 |

NOTE 1 Refer to Table 195 to match the WCK rate to data rate.

NOTE 2 The peak voltage of Differential WCK signals is calculated in a following equation.
Vindiff_WCK = (Max Peak Voltage) - (Min Peak Voltage)
Max Peak Voltage = Max(f(t))
Min Peak Voltage = Min(f(t))
f(t) = VWCK_t - VWCK_c

#### 12.2.2.1 Peak Voltage Calculation Method

The peak voltage of Differential WCK signals are calculated in a following equation.

**VIH.DIFF.Peak Voltage = Max(f(t))**
**VIL.DIFF.Peak Voltage = Min(f(t))**
**f(t) = VWCK_t - VWCK_c**

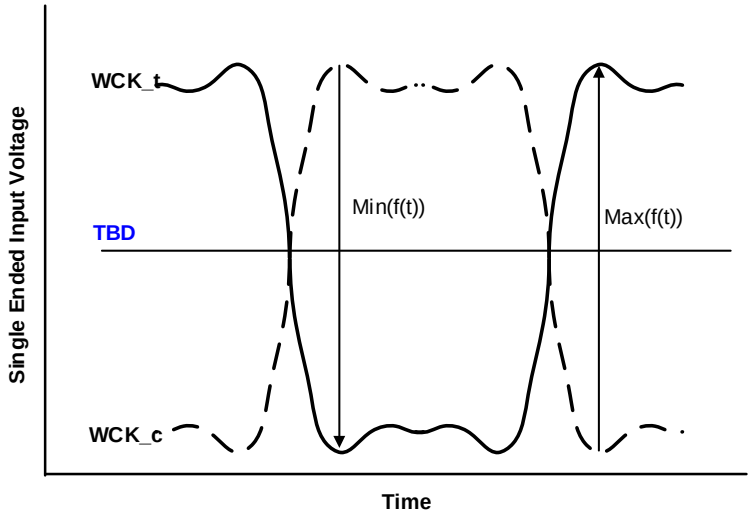


NOTE 1 TBD is LPDDR5 SDRAM internal setting value by Vref training.

**Figure 248 — Definition of differential WCK Peak Voltage**

### 12.2.2.2 Single ended Input Voltage for WCK

The minimum input voltage need to satisfy both Vinse_WCK, Vinse_WCK_High/Low specification at input receiver.

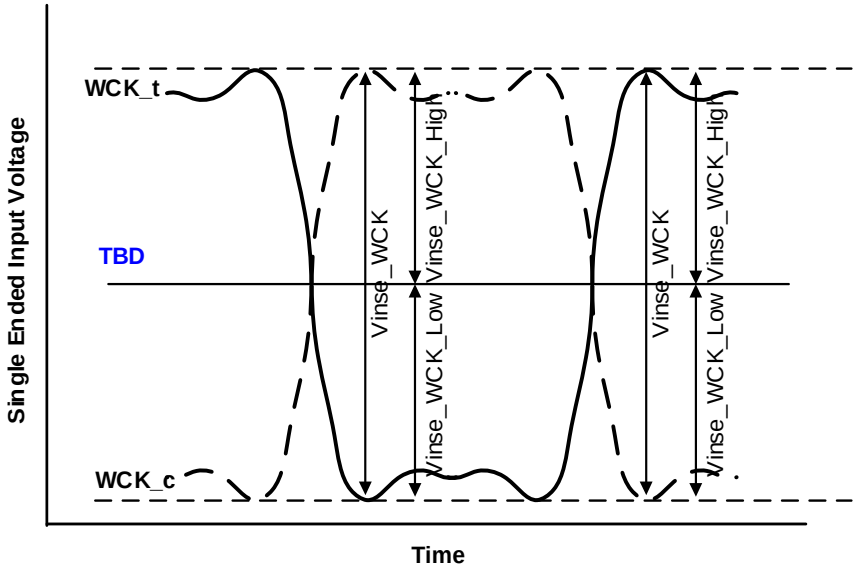


NOTE 1 TBD is LPDDR5 SDRAM internal setting value by Vref training

**Figure 249 — WCK Single ended Input Voltage**

**Table 394 — WCK Single-Ended Input Voltage**

| Parameter | Symbol | WCK Rate [MHz] | | | | | | | | | | | | Unit | Note |
|---|---|---|---|---|---|---|---|---|---|---|---|---|---|---|---|
| | | 800 | | 1066 | | 1600 | | 2133 | | 2750 | | 3200 | | | |
| | | Min | Max | Min | Max | Min | Max | Min | Max | Min | Max | Min | Max | | |
| WCK Single-ended input Voltage | Vinse_WCK | 150 | - | 150 | - | 150 | - | 140 | - | TBD | - | TBD | - | mV | |
| WCK Single-ended input Voltage High from TBD | Vinse_WCK _High | 75 | - | 75 | - | 75 | - | 70 | - | TBD | - | TBD | - | mV | |
| WCK Single-ended input Voltage Low from TBD | Vinse_WCK _Low | 75 | - | 75 | - | 75 | - | 70 | - | TBD | - | TBD | - | mV | |

### 12.2.2.3 Differential Input Slew Rate Definition for WCK

Input slew rate for differential signals (WCK_t, WCK_c) are defined and measured as shown in Figure **250** and the following Tables.

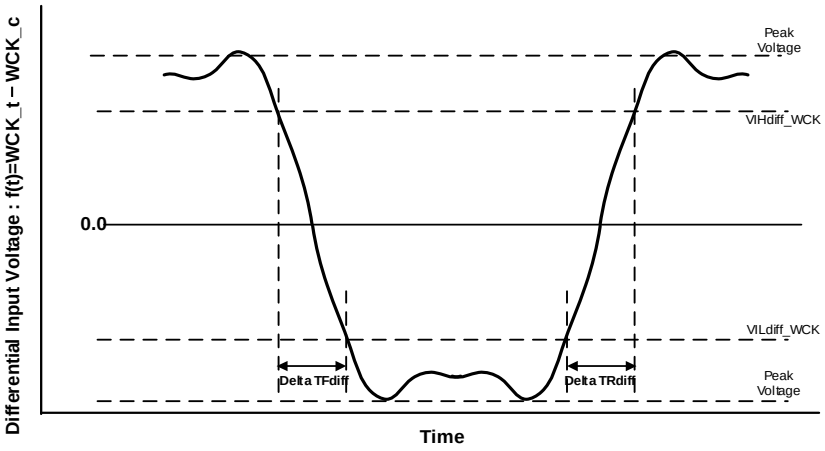


NOTE 1 Differential signal rising edge from VILdiff_WCK to VIHdiff_WCK must be monotonic slope.
NOTE 2 Differential signal falling edge from VIHdiff_WCK to VILdiff_WCK must be monotonic slope.

**Figure 250 — Differential Input Slew Rate Definition for WCK_t, WCK_c**

**Table 395 — Differential Input Slew Rate Definition for WCK_t, WCK_c**

| Description | From | To | Defined by |
|---|---|---|---|
| Differential input slew rate for rising edge (WCK_t - WCK_c) | VILdiff_WCK | VIHdiff_WCK | \|VILdiff_WCK - VIHdiff_WCK\|/DeltaTRdiff |
| Differential input slew rate for falling edge (WCK_t - WCK_c) | VIHdiff_WCK | VILdiff_WCK | \|VILdiff_WCK - VIHdiff_WCK\|/DeltaTFdiff |

**Table 396 — Differential Input Level for WCK_t, WCK_c**

| Parameter | Symbol | WCK Rate [MHz] | | | | | | | | | | | | Unit | Note |
|---|---|---|---|---|---|---|---|---|---|---|---|---|---|---|---|
| | | 800 | | 1066 | | 1600 | | 2133 | | 2750 | | 3200 | | | |
| | | Min | Max | Min | Max | Min | Max | Min | Max | Min | Max | Min | Max | | |
| Differential Input High | VIHdiff_WCK | 120 | - | 120 | - | 120 | - | 100 | - | TBD | - | TBD | - | mV | |
| Differential Input Low | VILdiff_WCK | - | 120 | - | 120 | - | 120 | - | 100 | - | TBD | - | TBD | mV | |

**Table 397 — Differential Input Slew Rate for WCK_t, WCK_c**

| Parameter | Symbol | WCK Rate [MHz] | | | | | | | | | | | | Unit | Note |
|---|---|---|---|---|---|---|---|---|---|---|---|---|---|---|---|
| | | 800 | | 1066 | | 1600 | | 2133 | | 2750 | | 3200 | | | |
| | | Min | Max | Min | Max | Min | Max | Min | Max | Min | Max | Min | Max | | |
| Differential Input Slew Rate for WCK | SRIdiff_WCK | 2 | 14 | 2 | 14 | 2 | 14 | 2 | 14 | 2 | 14 | 2 | 14 | V/ns | |

### 12.2.2.4 Differential Input Cross Point Voltage for WCK

The cross point voltage of differential input signals (WCK_t, WCK_c) must meet the requirements in Table 396. The differential input cross point voltage VIX is measured from the actual cross point of true and complement signals to the mid-level that is TBD.

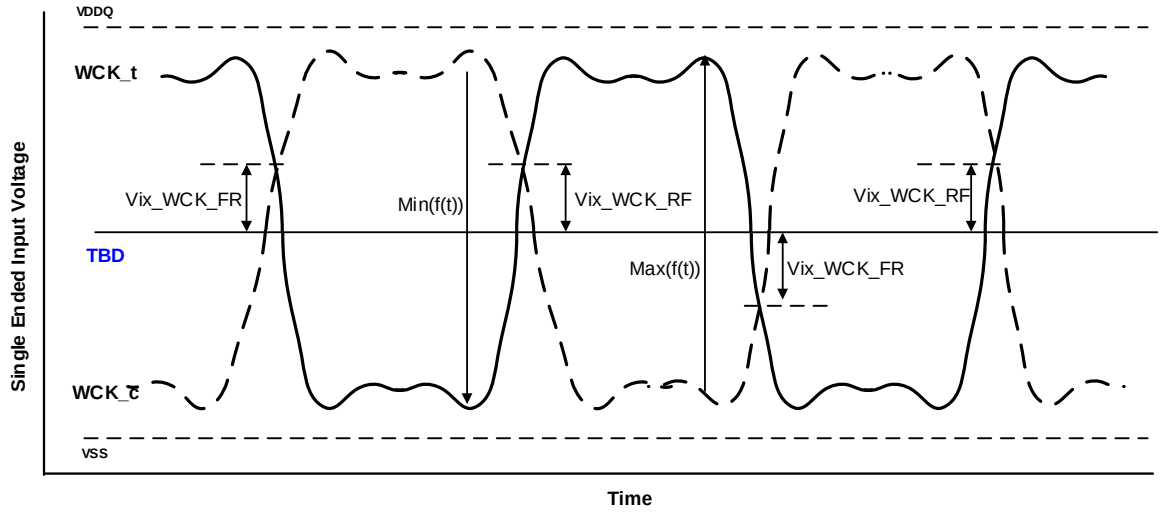


NOTE 1 The base level of Vix_WCK_FR/RF is TBD that is LPDDR5 SDRAM internal setting value by Vref training.

**Figure 251 — Vix Definition (WCK)**

**Table 398 — Cross point voltage for differential input signals (WCK)**

| Parameter | Symbol | WCK Rate [MHz] | | | | | | | | | | | | Unit | Note |
|---|---|---|---|---|---|---|---|---|---|---|---|---|---|---|---|
| | | 800 | | 1066 | | 1600 | | 2133 | | 2750 | | 3200 | | | |
| | | Min | Max | Min | Max | Min | Max | Min | Max | Min | Max | Min | Max | | |
| WCK Differential input crosspoint voltage ratio | Vix_WCK_ratio | - | 20 | - | 20 | - | 20 | - | 20 | - | 20 | - | 20 | % | 1,2 |

NOTE 1 Vix_WCK_Ratio is defined by this equation: Vix_WCK_Ratio = Vix_WCK_FR/|Min(f(t))|

NOTE 2 Vix_WCK_Ratio is defined by this equation: Vix_WCK_Ratio = Vix_WCK_RF/Max(f(t))

## 12.3Output Slew Rate

### 12.3.1 Single Ended Output Slew Rate

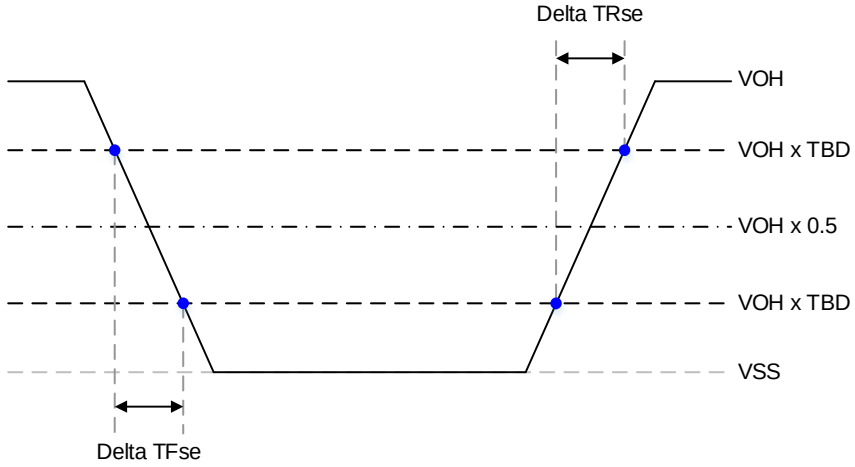


**Figure 252 - Single Ended Output Slew Rate Definition**

**Table 399 - Output Slew Rate (single-ended)**

| Parameter | Symbol | Value | | Units |
|---|---|---|---|---|
| | | Min | Max | |
| Single-ended Output Slew Rate | SRQse | TBD | TBD | V/ns |
| Output slew-rate matching Ratio (Rise to Fall) | - | TBD | TBD | - |

Description:
SR: Slew Rate
Q: Query Output (like in DQ, which stands for Data-in, Query-Output)
se: Single-ended Signals

NOTE 1 These values are measured with the following output reference load or guaranteed by design.

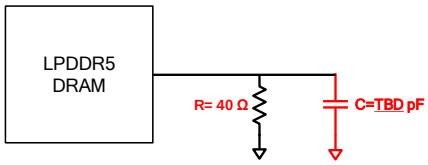


NOTE 2 The ratio of pull-up to pull-down slew rate is specified for the same temperature and voltage, over the entire temperature and voltage range. For a given output, it represents the maximum difference between pull-up and pulldown drivers due to process variation.

NOTE 3 The output slew rate for falling and rising edges is defined and measured between VOH x TBD and VOH x TBD.

NOTE 4 Slew rates are measured using a unit step signal which makes a full swing signal under average SSO conditions, with 50% of DQ signals per data byte switching. Because a high capacitance load reduces Voh(ac) at high frequency close to Fmax, the signal using PRBS data pattern may not achieve a full swing at such conditions.

NOTE 5 The parameters about Single-ended applies to RDQS_t and RDQS_c when either RDQS_t or RDQS_c is disabled.

### 12.3.2 Differential Output Slew Rate

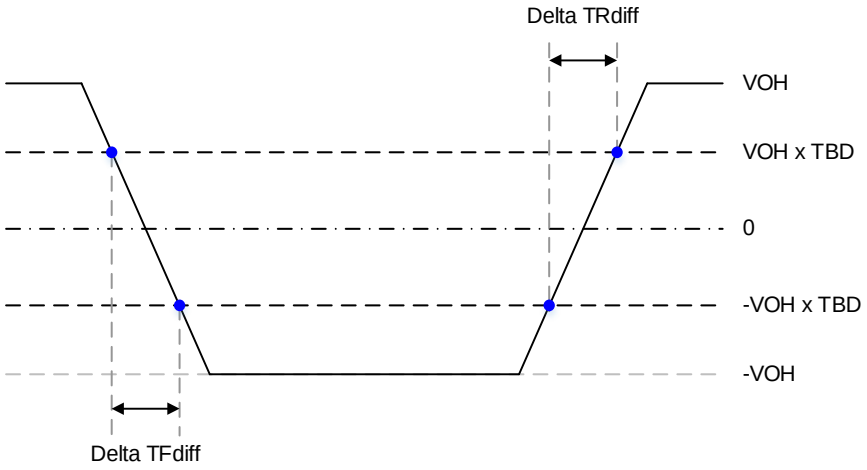


**Figure 253 - Differential Output Slew Rate Definition**

**Table 400 - Differential Output Slew Rat**

| Parameter | Symbol | Value | | Units |
|---|---|---|---|---|
| | | Min | Max | |
| Differential Output Slew Rate | SRQdiff | TBD | TBD | V/ns |

Description:
SR: Slew Rate
Q: Query Output (like in DQ, which stands for Data-in, Query-Output)
diff: Differential Signals

NOTE 1 These values are measured with the following output reference load or guaranteed by design.

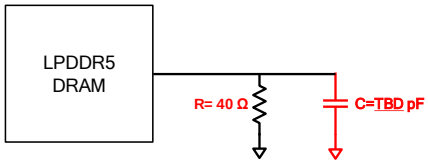


NOTE 2 The output slew rate for falling and rising edges is defined and measured between -VOH x TBD and VOH x TBD.

NOTE 3 Slew rates are measured using a unit step signal which makes a full swing signal under average SSO conditions, with 50% of DQ signals per data byte switching. Because a high capacitance load reduces Voh(ac) at high frequency close to Fmax, the signal using PRBS data pattern may not achieve a full swing at such conditions.

## 12.4Driver Output Timing Reference load

These "Timing Reference Loads" are not intended as a precise representation of any particular system environment or a depiction of the actual load presented by a production tester. System designers should use IBIS or other simulation tools to correlate the timing reference load to a system environment. Manufacturers correlate to their production test conditions, generally one or more coaxial transmission lines terminated at the tester electronics.

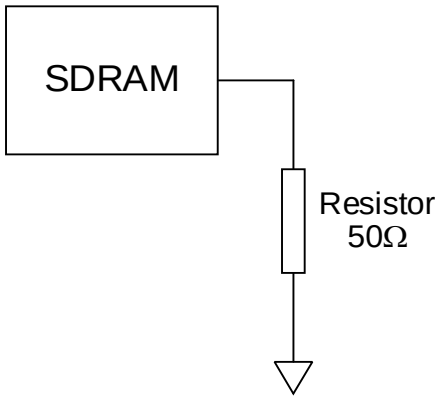


**Figure 254 - Driver Output Reference Load for Timing**

## 12.5 Single Ended WCK

### 12.5.1 Single Ended WCK input definitions

The minimum input voltage need to satisfy both Vinse_WCK_SE_High and Vinse_WCK_SE_Low specification at input receiver and their measurement period is 1tWCK. Vinse_WCK_SE is the peak to peak voltage centered on VDDQ/2 and Vinse_WCK_SE_High and Vinse_WCK_SE_Low is max and min peak voltage from VDDQ/2.

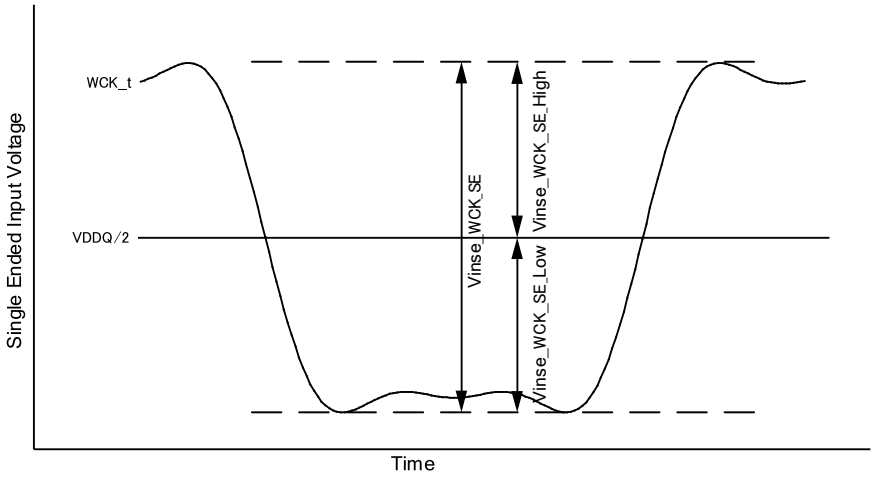


**Figure 255 — Single Ended Mode WCK input Voltage**

### 12.5.2 Single Ended Mode WCK Pulse Definitions

Single Ended Mode WCK pulse definitions are defined shown below.

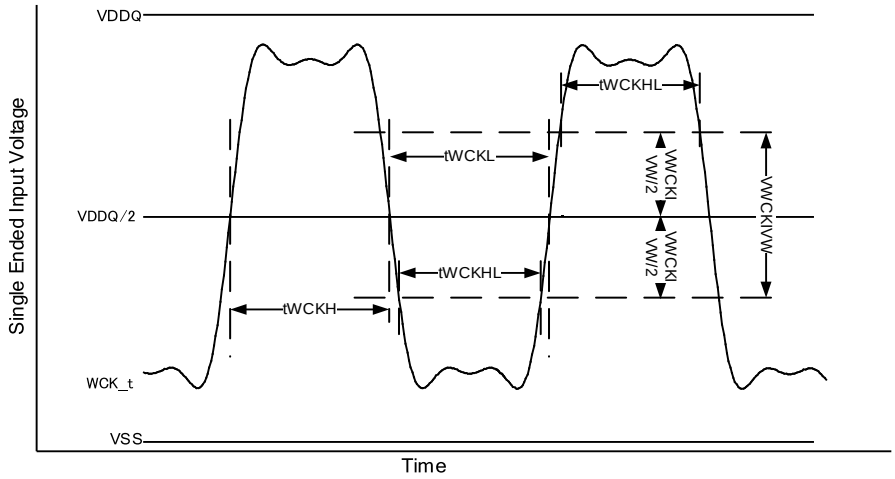


**Figure 256 — Single Ended Mode WCK pulse**

### 12.5.2 Single-Ended Mode WCK Pulse Definitions (Cont'd)

**Table 401 — Single Ended WCK parameters**

| Parameter | Symbol | Min/Max | WCK Frequency | Unit | Note |
|---|---|---|---|---|---|
| | | | 800MHz | | |
| WCK Single ended input voltage | Vinse_WCK_SE | Min | 220 | mV | |
| WCK Single Ended Input Voltage High | Vinse_WCK_SE_High | Min | 110 | mV | |
| WCK Single Ended Input Voltage Low | Vinse_WCK_SE_low | Min | 110 | mV | |
| WCK single ended timing window | VWCKIVW | Min | 180 | mV | |
| Clock Single Ended WCK Pulse | tWCKHL | Min | 0.23 | tWCK (avg) | |
| WCK single ended Slew Rate | SRIWCKSE | Min | 1 | V/ns | 1 |
| | | Max | 7 | | |

NOTE 1 Single ended slew rate is measured at VDDQ/2 - VWCKIVW/2 and VDDQ/2 + VWCKIVW/2

## 12.6 Single Ended CK

### 12.6.1 Single Ended CK input definitions

The minimum input voltage need to satisfy both Vinse_CK_SE_High and Vinse_CK_SE_Low specification at input receiver and their measurement period is 1tCK. Vinse_CK_SE is the peak to peak voltage centered on VDDQ/2 and Vinse_CK_SE_High and Vinse_CK_SE_Low is max and min peak voltage from VDDQ/2.

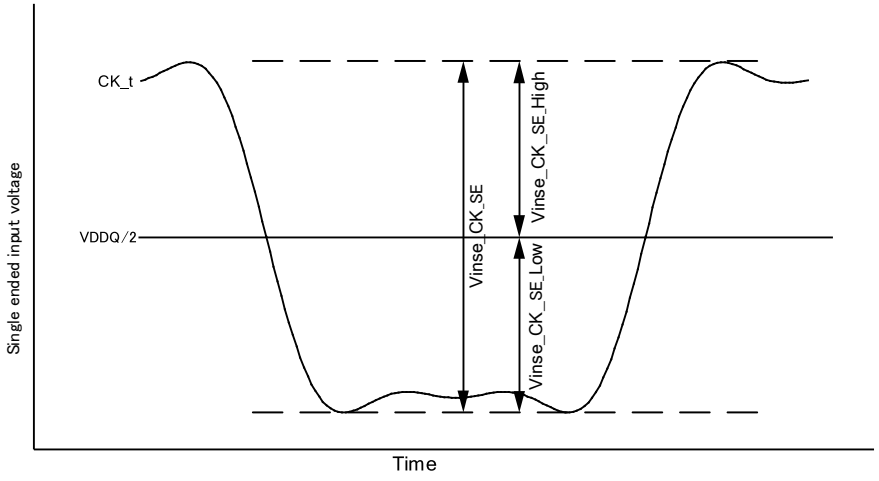


**Figure 257 — Single Ended Mode CK input Voltage**

### 12.6.2 Single Ended Mode CK Pulse Definitions

Single Ended Mode CK pulse definitions are defined as shown in Table 402.

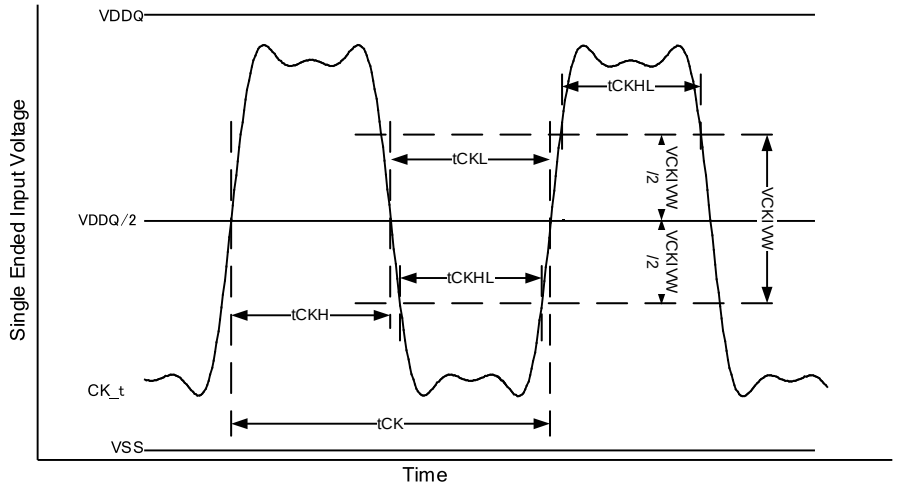


**Figure 258 — Single Ended Mode CK pulse**

**Table 402 — Single Ended CK parameters**

| Parameter | Symbol | Min/Max | CK Frequency | Unit | Note |
|---|---|---|---|---|---|
| | | | 400MHz | | |
| CK Single ended input voltage | Vinse_CK_SE | Min | 220 | mV | |
| CK Single Ended Input Voltage High | Vinse_CK_SE_High | Min | 110 | mV | |
| CK Single Ended Input Voltage Low | Vinse_CK_SE_low | Min | 110 | mV | |
| CK single ended timing window | VCKIVW | min | 190 | mV | |
| Clock Single Ended CK Pulse | tCKHL | Min | 0.26 | tCK(avg) | |
| CK single ended Slew Rate | SRICKSE | Min | 1 | V/ns | 1 |
| | | Max | 7 | | |

NOTE 1 Single ended slew rate is measured at VDDQ/2 - VCKIVW/2 and VDDQ/2 + VCKIVW/2.

## 12.7 Read Timing tLZ(DQS), tLZ(DQ), tHZ(DQS), tHZ(DQ) Calculation

### 12.7.1 tLZ(RDQS) tLZ(DQ) tHZ(RDQS) tHZ(DQ)

tHZ and tLZ transitions occur in the same time window as valid data transitions. These parameters are referenced to voltage levels that indicate when the device output is no longer driving tHZ(RDQS) and tHZ(DQ), or begins driving tLZ(RDQS), tLZ(DQ).

This section includes a method to calculate the point when the device is no longer driving tHZ(RDQS) and tHZ(DQ), or begins driving tLZ(RDQS), tLZ(DQ), by measuring the signal at two different voltages. The actual voltage measurement points are not critical as long as the calculation is consistent. The parameters tLZ(RDQS), tLZ(DQ), tHZ(RDQS), and tHZ(DQ) are defined as single ended.

#### 12.7.1.1 tLZ(RDQS) and tHZ(RDQS) Calculation for ATE(Automatic Test Equipment)

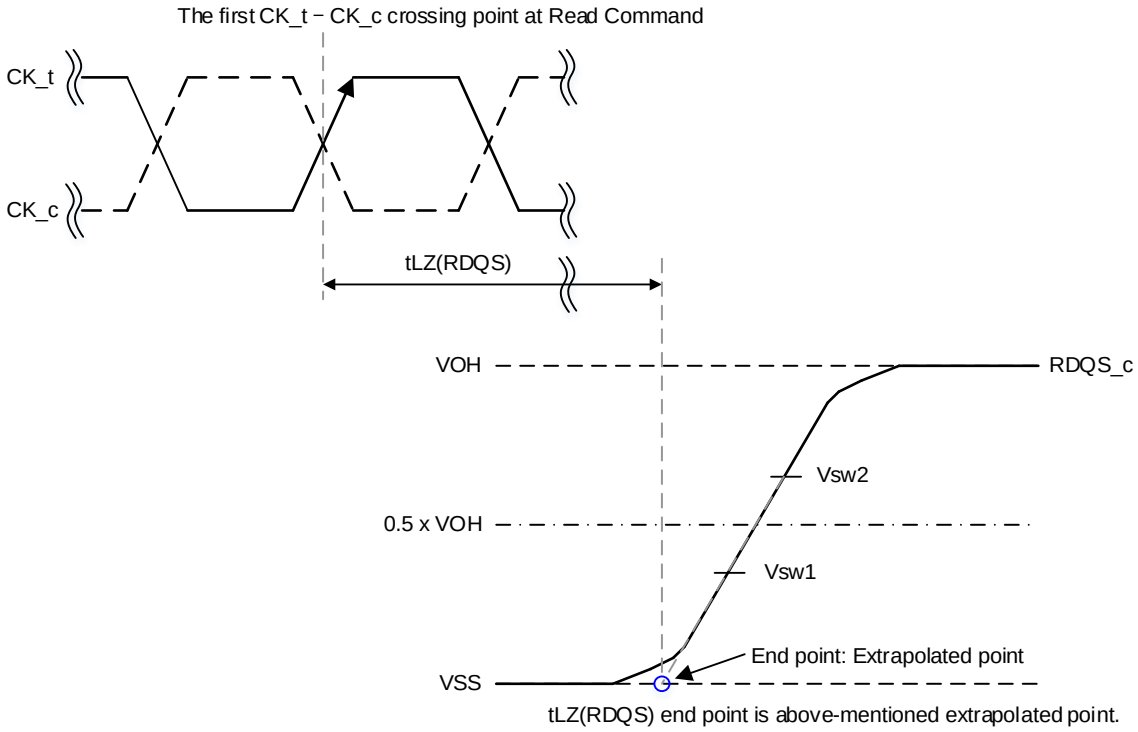


NOTE 1 Conditions for Calibration: VDDQ = 0.5 V, Pull Down Driver Ron = 40ohm, VOH = VDDQ/2
NOTE 2 Termination condition for RDQS_t and RDQS_c = 50ohm to VSS.
NOTE 3 Use the actual VOH value for tHZ and tLZ measurements.

**Figure 259 — tLZ(RDQS) method for calculating transitions and end point**

### 12.7.1.1 tLZ(RDQS) and tHZ(RDQS) Calculation for ATE(Automatic Test Equipment (Cont'd)

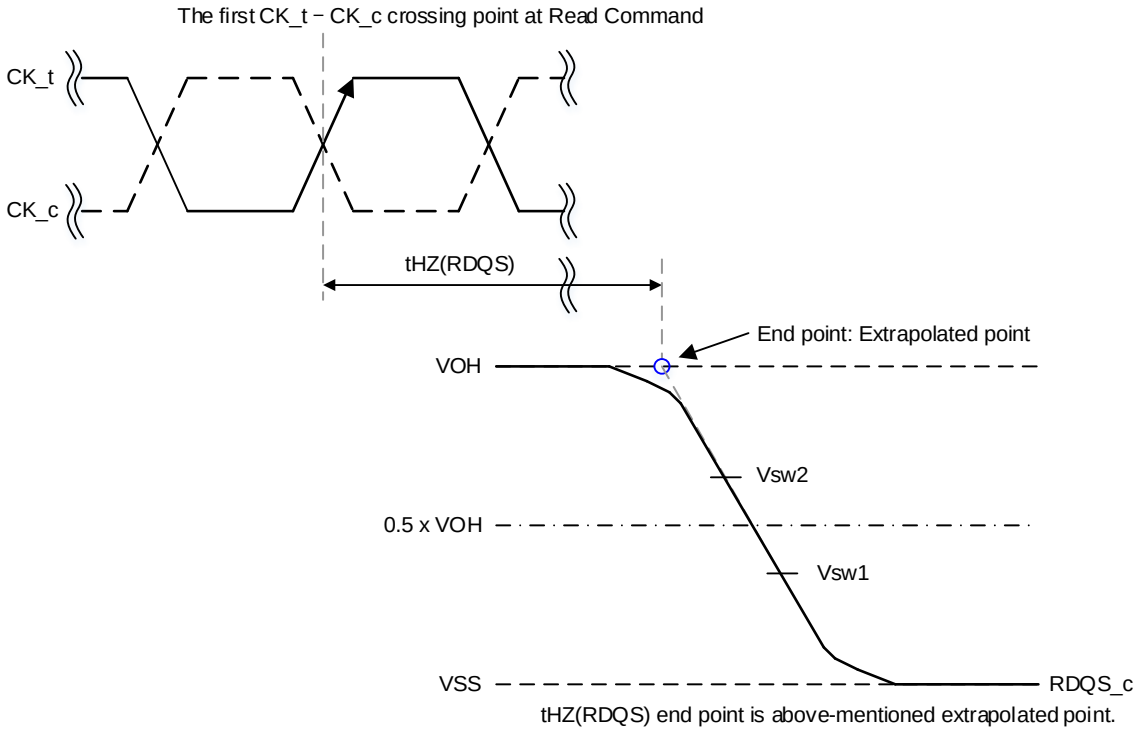


NOTE 1 Conditions for Calibration: VDDQ = 0.5 V, Pull Down Driver Ron = 40ohm, VOH = VDDQ/2
NOTE 2 Termination condition for RDQS_t and RDQS_c = 50ohm to VSS.
NOTE 3 Use the actual VOH value for tHZ and tLZ measurements.

**Figure 260 — tHZ(RDQS) method for calculating transitions and end point**

**Table 403 — Reference Voltage for tLZ(RDQS), tHZ(RDQS) Timing Measurements**

| Measured Parameter | Measured Parameter Symbol | Vsw1[V] | Vsw2[V] | Notes |
|---|---|---|---|---|
| RDQS_c low-impedance time from CK_t, CK_c | tLZ(RDQS) | 0.4 x VOH | 0.6 x VOH | |
| RDQS_c high impedance time from CK_t, CK_c | tHZ(RDQS) | 0.4 x VOH | 0.6 x VOH | |

### 12.7.1.2 tLZ(DQ) and tHZ(DQ) Calculation for ATE (Automatic Test Equipment)

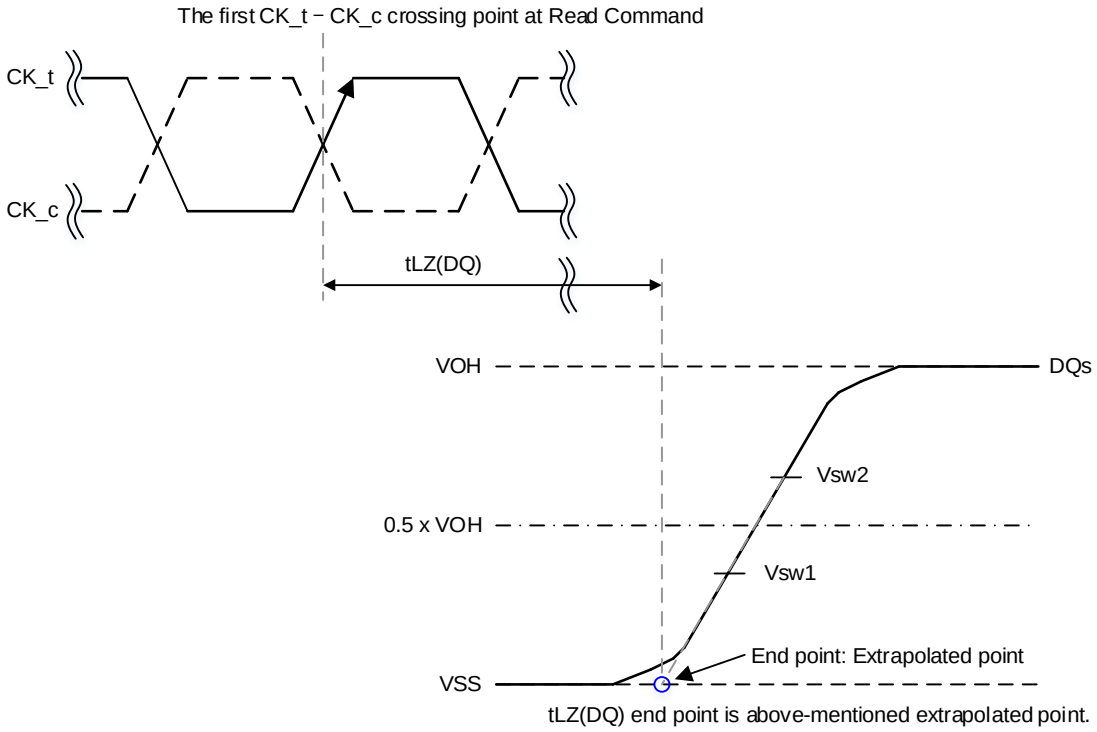


NOTE 1 Conditions for Calibration: VDDQ = 0.5 V, Pull Down Driver Ron = 40ohm, VOH = VDDQ/2
NOTE 2 Termination condition for DQs and DMI = 50ohm to VSS.
NOTE 3 Use the actual VOH value for tHZ and tLZ measurements.

**Figure 261 — tLZ(DQ) method for calculating transitions and end point**

### 12.7.1.2 tLZ(DQ) and tHZ(DQ) Calculation for ATE (Automatic Test Equipment) (Cont'd)

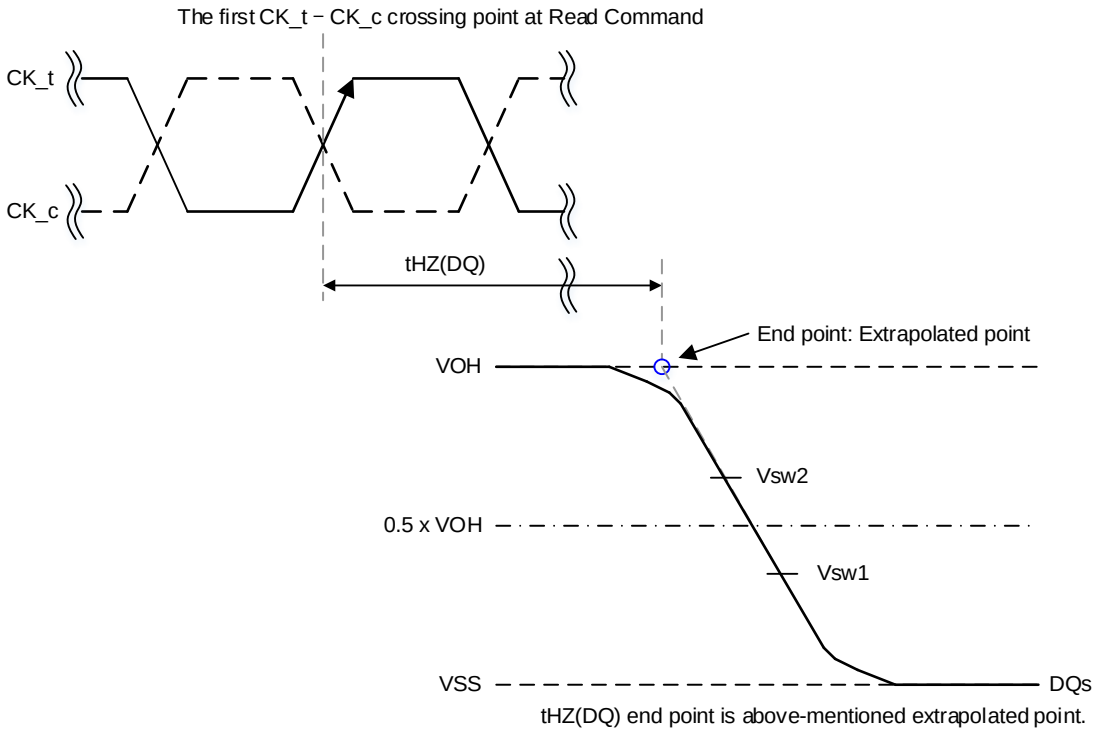


NOTE 1 Conditions for Calibration: VDDQ = 0.5 V, Pull Down Driver Ron = 40ohm, VOH = VDDQ/2
NOTE 2 Termination condition for DQs and DMI = 50ohm to VSS.
NOTE 3 Use the actual VOH value for tHZ and tLZ measurements.

**Figure 262 — tHZ(DQ) method for calculating transitions and end point**

**Table 404 — Reference Voltage for tLZ(DQ), tHZ(DQ) Timing Measurements**

| Measured Parameter | Measured Parameter Symbol | Vsw1[V] | Vsw2[V] | Notes |
|---|---|---|---|---|
| DQ low-impedance time from CK_t, CK_c | tLZ(DQ) | 0.4 x VOH | 0.6 x VOH | |
| DQ high impedance time from CK_t, CK_c | tHZ(DQ) | 0.4 x VOH | 0.6 x VOH | |

### 12.7.1.2 tLZ(DQ) and tHZ(DQ) Calculation for ATE (Automatic Test Equipment) (Cont'd)

**Table 405 — Read AC Timing**

| Parameter | Symbol | Min/Max | Data Rate | Unit | Notes |
|---|---|---|---|---|---|
| | | | Up to 6400Mbps | | |
| READ preamble | tRPRE | Min | TBD | tCK(avg) | |
| READ postamble | tRPST | Min | TBD | tCK(avg) | |
| RDQS_c low-impedance time from CK_t, CK_c | tLZ(RDQS) | Min | (RL x tCK) + tWCK2CK(Min) + tWCK2DQO(Min) - (tRPRE(Max) x tCK) - TBDps | ps | |
| RDQS_c high impedance time from CK_t, CK_c | tHZ(RDQS) | Max | (RL x tCK) + tWCK2CK(Max) + BL/n_min + (RPST(Max) x tCK) - TBDps | ps | |
| DQ low-impedance time from CK_t, CK_c | tLZ(DQ) | Min | (RL x tCK + tWCK2CK(Min) + tDQSQ(Min) -TBDps | ps | |
| DQ high impedance time from CK_t, CK_c | tHZ(DQ) | Max | (RL x tCK) + tWCK2CK(Max) + tWCK2DQO(Max) + BLn_min -TBDps | ps | |

## 13 Input / Output Capacitance

**Table 406 - Input / Output Capacitance**

| Parameter | Symbol | | LPDDR5 5500-533 | LPDDR5 6400 | Units | Notes |
|---|---|---|---|---|---|---|
| Input Capacitance, CK_t and CK_c | CCK | Min | 0.3 | 0.3 | pF | 1,2 |
| | | Max | 1.4 | 0.8 | pF | 1,2 |
| Input Capacitance delta, CK_t and CK_c | CDCK | Min | 0.0 | 0.0 | pF | 1,2,3 |
| | | Max | 0.09 | 0.09 | pF | 1,2,3 |
| Input Capacitance, WCK_t and WCK_c | CWCK | Min | 0.3 | 0.3 | pF | 1,2 |
| | | Max | 1.0 | 0.9 | pF | 1,2 |
| Input Capacitance delta, WCK_t and WCK_c | CDWCK | Min | 0.0 | 0.0 | pF | 1,2,4 |
| | | Max | 0.09 | 0.09 | pF | 1,2,4 |
| Input Capacitance, All other input-only pins | CI | Min | 0.3 | 0.3 | pF | 1,2,5 |
| | | Max | 1.4 | 0.8 | pF | 1,2,5 |
| Input Capacitance delta, All other input-only pins | CDI | Min | -0.1 | -0.1 | pF | 1,2,6 |
| | | Max | 0.1 | 0.1 | pF | 1,2,6 |
| Input/output Capacitance, DQ and DMI | CIO | Min | 0.3 | 0.3 | pF | 1,2,7 |
| | | Max | 1.0 | 0.9 | pF | 1,2,7 |
| Input/output Capacitance delta, DQ and DMI | CDIO | Min | -0.1 | -0.1 | pF | 1,2,9 |
| | | Max | 0.1 | 0.1 | pF | 1,2,9 |
| Output Capacitance, RDQS_t and RDQS_c | COO | Min | 0.3 | 0.3 | pF | 1,2 |
| | | Max | 1.0 | 0.9 | pF | 1,2 |
| Output Capacitance delta, RDQS_t and RDQS_c | CDOO | Min | 0.0 | 0.0 | pF | 1,2,8 |
| | | Max | 0.1 | 0.1 | pF | 1,2,8 |
| Input/output capacitance, ZQ pin | CZQ | Min | 0.0 | 0.0 | pF | 1,2 |
| | | Max | 5.0 | 5.0 | pF | 1,2 |

NOTE 1 This parameter applies to die device, including IO capacitance, RDL if needed (does not include package capacitance such as bond wire).

NOTE 2 This parameter is not subject to production test. It is verified by design and characterization. The capacitance is measured according to JEP147 (Procedure for measuring input capacitance using a vector network analyzer (VNA) with VDD1, VDD2, VDDQ, VSS applied and all other pins floating.

NOTE 3 Absolute value of CCK_t - CCK_c.

NOTE 4 Absolute value of CWCK_t - CWCK_c.

NOTE 5 CI applieds to CS, CA0~CA6.

NOTE 6 CDI = CI – Average (CInputn, CCK_t, CCK_c).

NOTE 7 DMI loading matches DQ.

NOTE 8 Absolute value of CRDQS_t - CRDQS_c.

NOTE 9 CDIO = CIO – Average (CDQn, CDMI) in byte-lane.

# 14 IDD Specification Parameters and Test Conditions

## 14.1 IDD Measurement Conditions

The following definitions are used within the IDD measurement tables unless stated otherwise:

- LOW: VIN ≤ VIL(DC) MAX
- HIGH: VIN ≥ VIH(DC) MIN
- STABLE: Inputs are stable at a HIGH or LOW level
- SWITCHING: See Tables 333 through 339

**Table 407 — Definition of Switching for CA Input Signals**

| CK_t edge | R1 | F1 | R2 | F2 | R3 | F3 | R4 | F4 | R5 | F5 | R6 | F6 | R7 | F7 | R8 | F8 |
|---|---|---|---|---|---|---|---|---|---|---|---|---|---|---|---|---|
| **CS** | L | L | L | L | L | L | L | L | L | L | L | L | L | L | L | L |
| **CA0** | H | L | L | L | L | H | H | H | H | L | L | L | L | H | H | H |
| **CA1** | H | H | H | L | L | L | L | H | H | H | H | L | L | L | L | H |
| **CA2** | H | L | L | L | L | H | H | H | H | L | L | L | L | H | H | H |
| **CA3** | H | H | H | L | L | L | L | H | H | H | H | L | L | L | L | H |
| **CA4** | H | L | L | L | L | H | H | H | H | L | L | L | L | H | H | H |
| **CA5** | H | H | H | L | L | L | L | H | H | H | H | L | L | L | L | H |
| **CA6** | H | L | L | L | L | H | H | H | H | L | L | L | L | H | H | H |

NOTE 1 CS must always be driven LOW.
NOTE 2 50% of CA bus is changing between HIGH and LOW once per clock for the CA bus.
NOTE 3 The pattern is used continuously during IDD measurement for IDD values that require switching on the CA bus.

**Table 408 — CA Pattern for IDD4R @ BG mode**

| Clock Cycle # | CS | Command | CA0 | CA1 | CA2 | CA3 | CA4 | CA5 | CA6 | Note |
|---|---|---|---|---|---|---|---|---|---|---|
| **R0** | High | Read | H | L | L | L | L | L | L | 1 |
| **F0** | Low | | L | H | H | L | L | L | L | |
| **R1** | High | DES | L | L | L | L | L | L | L | |
| **F1** | Low | | L | L | L | L | L | L | L | |
| **R2** | High | Read | H | L | L | L | L | L | L | 2 |
| **F2** | Low | | L | H | L | H | L | L | L | |
| **R3** | Low | CAS (B3) | L | L | H | H | L | L | L | |
| **F3** | Low | | L | L | L | L | L | L | H | |
| **R4** | High | Read | H | L | L | H | H | H | H | 3 |
| **F4** | Low | | L | H | H | L | H | H | L | |
| **R5** | High | CAS (B3) | L | L | H | H | L | L | L | |
| **F5** | Low | | L | L | L | L | L | L | H | |
| **R6** | High | Read | H | L | L | H | H | H | H | 4 |
| **F6** | Low | | L | H | L | H | H | H | L | |
| **R7** | Low | DES | L | L | L | L | L | L | L | |
| **F7** | Low | | L | L | L | L | L | L | L | |

NOTE 1 Pattern A is applied to DQs.
NOTE 2 Pattern B is applied to DQs.
NOTE 3 Pattern A' is applied to DQs.
NOTE 4 Pattern B' is applied to DQs.
NOTE 5 The pattern above is applied when WCK to CK frequency ratio is 4:1 and bank organization is BG mode.

## 14.1 IDD Measurement Conditions (Cont'd)

**Table 409 — CA Pattern for IDD4R @ 16B mode**

| Clock Cycle # | CS | Command | CA0 | CA1 | CA2 | CA3 | CA4 | CA5 | CA6 | Note |
|---|---|---|---|---|---|---|---|---|---|---|
| **R0** | High | Read | H | L | L | L | L | L | L | 1 |
| **F0** | Low | | L | H | H | L | L | L | L | |
| **R1** | High | CAS (B3) | L | L | H | H | L | L | L | |
| **F1** | Low | | L | L | L | L | L | L | H | |
| **R2** | High | Read | H | L | L | H | H | H | H | 2 |
| **F2** | Low | | L | H | H | L | H | H | L | |
| **R3** | Low | DES | L | L | L | L | L | L | L | |
| **F3** | Low | DES | L | L | L | L | L | L | L | |

NOTE 1 Pattern A is applied to DQs.
NOTE 2 Pattern B is applied to DQs.
NOTE 3 The pattern above is applied when WCK to CK frequency ratio is 4:1 and bank organization is 16B mode. In the case WCK:CK=2:1, the number of DES commands is increased to match tCCD.

**Table 410 — CA Pattern for IDD4R @ 8B mode**

| Clock Cycle # | CS | Command | CA0 | CA1 | CA2 | CA3 | CA4 | CA5 | CA6 | Note |
|---|---|---|---|---|---|---|---|---|---|---|
| **R0** | High | Read | H | L | L | L | L | L | L | 1 |
| **F0** | Low | | L | H | H | L | L | L | L | |
| **R1** | Low | DES | L | L | L | L | L | L | L | |
| **F1** | Low | | L | L | L | L | L | L | L | |
| **R2** | Low | DES | L | L | L | L | L | L | L | 2 |
| **F2** | Low | | L | L | L | L | L | L | L | |
| **R3** | High | CAS (B3) | L | L | H | H | L | L | L | |
| **F3** | Low | | L | L | L | L | L | L | H | |
| **R4** | High | Read | H | L | L | H | H | H | H | 3 |
| **F4** | Low | | L | H | H | L | H | H | L | |
| **R5** | Low | DES | L | L | L | L | L | L | L | |
| **F5** | Low | | L | L | L | L | L | L | L | |
| **R6** | Low | DES | L | L | L | L | L | L | L | 4 |
| **F6** | Low | | L | L | L | L | L | L | L | |
| **R7** | Low | DES | L | L | L | L | L | L | L | |
| **F7** | Low | | L | L | L | L | L | L | L | |

NOTE 1 Pattern A is applied to DQs.
NOTE 2 Pattern B is applied to DQs.
NOTE 3 Pattern CA' is applied to DQs.
NOTE 4 Pattern DB' is applied to DQs.
NOTE 5 The pattern above is applied when WCK to CK frequency ratio is 4:1 and bank organization is 8B mode. In the case WCK:CK=2:1, the number of DES commands is increased to match tCCD.

## 14.1 IDD Measurement Conditions (Cont'd)

**Table 411 — CA Pattern for IDD4W@ BG mode**

| Clock Cycle # | CS | Command | CA0 | CA1 | CA2 | CA3 | CA4 | CA5 | CA6 | Note |
|---|---|---|---|---|---|---|---|---|---|---|
| **R0** | High | WRITE | L | H | H | L | L | L | L | 1 |
| **F0** | Low | | L | H | H | L | L | L | L | |
| **R1** | Low | DES | L | L | L | L | L | L | L | |
| **F1** | Low | | L | L | L | L | L | L | L | |
| **R2** | High | WRITE | L | H | H | L | L | L | L | 2 |
| **F2** | Low | | L | H | L | H | L | L | L | |
| **R3** | Low | DES | L | L | L | L | L | L | L | |
| **F3** | Low | | L | L | L | L | L | L | L | |
| **R4** | High | WRITE | L | H | H | H | H | H | H | 1 |
| **F4** | Low | | L | H | H | L | H | H | L | |
| **R5** | Low | DES | L | L | L | L | L | L | L | |
| **F5** | Low | | L | L | L | L | L | L | L | |
| **R6** | High | WRITE | L | H | H | H | H | H | H | 2 |
| **F6** | Low | | L | H | L | H | H | H | L | |
| **R7** | Low | DES | L | L | L | L | L | L | L | |
| **F7** | Low | | L | L | L | L | L | L | L | |

NOTE 1 Pattern A is applied to DQs.
NOTE 2 Pattern B is applied to DQs.
NOTE 3 The pattern above is applied when WCK to CK frequency ratio is 4:1 and bank organization is BG mode.

**Table 412 — CA Pattern for IDD4W @ 16B mode**

| Clock Cycle # | CS | Command | CA0 | CA1 | CA2 | CA3 | CA4 | CA5 | CA6 | Note |
|---|---|---|---|---|---|---|---|---|---|---|
| **R0** | High | WRITE | L | H | H | L | L | L | L | 1 |
| **F0** | Low | | L | H | H | L | L | L | L | |
| **R1** | Low | DES | L | L | L | L | L | L | L | |
| **F1** | Low | DES | L | L | L | L | L | L | L | |
| **R2** | High | WRITE | L | H | H | H | H | H | H | 2 |
| **F2** | Low | | L | H | H | L | H | H | L | |
| **R3** | Low | DES | L | L | L | L | L | L | L | |
| **F3** | Low | DES | L | L | L | L | L | L | L | |

NOTE 1 Pattern A is applied to DQs.
NOTE 2 Pattern B is applied to DQs.
NOTE 3 The pattern above is applied when WCK to CK frequency ratio is 4:1 and bank organization is 16B mode. In the case WCK:CK=2:1, the number of DES commands is increased to match tCCD.

## 14.1 IDD Measurement Conditions (Cont'd)

**Table 413 — CA Pattern for IDD4W@ 8B mode**

| Clock Cycle # | CS | Command | CA0 | CA1 | CA2 | CA3 | CA4 | CA5 | CA6 | Note |
|---|---|---|---|---|---|---|---|---|---|---|
| **R0** | High | WRITE | L | H | H | L | L | L | L | 1 |
| **F0** | Low | | L | H | H | L | L | L | L | |
| **R1** | Low | DES | L | L | L | L | L | L | L | |
| **F1** | Low | | L | L | L | L | L | L | L | |
| **R2** | Low | DES | L | L | L | L | L | L | L | 2 |
| **F2** | Low | | L | L | L | L | L | L | L | |
| **R3** | Low | DES | L | L | L | L | L | L | L | |
| **F3** | Low | | L | L | L | L | L | L | L | |
| **R4** | High | WRITE | L | H | H | H | H | H | H | 1 |
| **F4** | Low | | L | H | H | L | H | H | L | |
| **R5** | Low | DES | L | L | L | L | L | L | L | |
| **F5** | Low | | L | L | L | L | L | L | L | |
| **R6** | Low | DES | L | L | L | L | L | L | L | 2 |
| **F6** | Low | | L | L | L | L | L | L | L | |
| **R7** | Low | DES | L | L | L | L | L | L | L | |
| **F7** | Low | | L | L | L | L | L | L | L | |

NOTE 1 Pattern A is applied to DQs.
NOTE 2 Pattern B is applied to DQs.
NOTE 3 The pattern above is applied when WCK to CK frequency ratio is 4:1 and bank organization is 8B mode. In the case WCK:CK=2:1, the number of DES commands is increased to match tCCD.

## 14.1 IDD Measurement Conditions (Cont'd)

**Table 414 — Data Pattern for IDD4R @ DBI Off**

| DQs – IDD4R DBI OFF | | | | | | | | | | | # of 1`s |
|---|---|---|---|---|---|---|---|---|---|---|---|
| Type | BL | DQ[7] | DQ[6] | DQ[5] | DQ[4] | DQ[3] | DQ[2] | DQ[1] | DQ[0] | DBI | |
| Pattern A | BL0 | 1 | 1 | 1 | 1 | 1 | 1 | 1 | 1 | 0 | 8 |
| | BL1 | 1 | 1 | 1 | 1 | 0 | 0 | 0 | 0 | 0 | 4 |
| | BL2 | 0 | 0 | 0 | 0 | 0 | 0 | 0 | 0 | 0 | 0 |
| | BL3 | 0 | 0 | 0 | 0 | 1 | 1 | 1 | 1 | 0 | 4 |
| | BL4 | 0 | 0 | 0 | 0 | 0 | 0 | 1 | 1 | 0 | 2 |
| | BL5 | 0 | 0 | 0 | 0 | 1 | 1 | 1 | 1 | 0 | 4 |
| | BL6 | 1 | 1 | 1 | 1 | 1 | 1 | 0 | 0 | 0 | 6 |
| | BL7 | 1 | 1 | 1 | 1 | 0 | 0 | 0 | 0 | 0 | 4 |
| | BL8 | 1 | 1 | 1 | 1 | 1 | 1 | 1 | 1 | 0 | 8 |
| | BL9 | 1 | 1 | 1 | 1 | 0 | 0 | 0 | 0 | 0 | 4 |
| | BL10 | 0 | 0 | 0 | 0 | 0 | 0 | 0 | 0 | 0 | 0 |
| | BL11 | 0 | 0 | 0 | 0 | 1 | 1 | 1 | 1 | 0 | 4 |
| | BL12 | 0 | 0 | 0 | 0 | 0 | 0 | 1 | 1 | 0 | 2 |
| | BL13 | 0 | 0 | 0 | 0 | 1 | 1 | 1 | 1 | 0 | 4 |
| | BL14 | 1 | 1 | 1 | 1 | 1 | 1 | 0 | 0 | 0 | 6 |
| | BL15 | 1 | 1 | 1 | 1 | 0 | 0 | 0 | 0 | 0 | 4 |
| Pattern B | BL0 | 1 | 1 | 1 | 1 | 1 | 1 | 0 | 0 | 0 | 6 |
| | BL1 | 1 | 1 | 1 | 1 | 0 | 0 | 0 | 0 | 0 | 4 |
| | BL2 | 0 | 0 | 0 | 0 | 0 | 0 | 1 | 1 | 0 | 2 |
| | BL3 | 0 | 0 | 0 | 0 | 1 | 1 | 1 | 1 | 0 | 4 |
| | BL4 | 0 | 0 | 0 | 0 | 0 | 0 | 0 | 0 | 0 | 0 |
| | BL5 | 0 | 0 | 0 | 0 | 1 | 1 | 1 | 1 | 0 | 4 |
| | BL6 | 1 | 1 | 1 | 1 | 1 | 1 | 1 | 1 | 0 | 8 |
| | BL7 | 1 | 1 | 1 | 1 | 0 | 0 | 0 | 0 | 0 | 4 |
| | BL8 | 0 | 0 | 0 | 0 | 0 | 0 | 1 | 1 | 0 | 2 |
| | BL9 | 0 | 0 | 0 | 0 | 1 | 1 | 1 | 1 | 0 | 4 |
| | BL10 | 1 | 1 | 1 | 1 | 1 | 1 | 0 | 0 | 0 | 6 |
| | BL11 | 1 | 1 | 1 | 1 | 0 | 0 | 0 | 0 | 0 | 4 |
| | BL12 | 1 | 1 | 1 | 1 | 1 | 1 | 1 | 1 | 0 | 8 |
| | BL13 | 1 | 1 | 1 | 1 | 0 | 0 | 0 | 0 | 0 | 4 |
| | BL14 | 0 | 0 | 0 | 0 | 0 | 0 | 0 | 0 | 0 | 0 |
| | BL15 | 0 | 0 | 0 | 0 | 1 | 1 | 1 | 1 | 0 | 4 |

## 14.1 IDD Measurement Conditions (Cont'd)

**Data Pattern for IDD4R @ DBI Off (Cont'd)**

| DQs – IDD4R DBI OFF | | | | | | | | | | | # of 1`s |
|---|---|---|---|---|---|---|---|---|---|---|---|
| Type | BL | DQ[7] | DQ[6] | DQ[5] | DQ[4] | DQ[3] | DQ[2] | DQ[1] | DQ[0] | DBI | |
| Pattern A' | BL0 | 1 | 1 | 1 | 1 | 1 | 1 | 1 | 1 | 0 | 8 |
| | BL1 | 1 | 1 | 1 | 1 | 0 | 0 | 0 | 0 | 0 | 4 |
| | BL2 | 0 | 0 | 0 | 0 | 0 | 0 | 0 | 0 | 0 | 0 |
| | BL3 | 0 | 0 | 0 | 0 | 1 | 1 | 1 | 1 | 0 | 4 |
| | BL4 | 0 | 0 | 0 | 0 | 0 | 0 | 1 | 1 | 0 | 2 |
| | BL5 | 0 | 0 | 0 | 0 | 1 | 1 | 1 | 1 | 0 | 4 |
| | BL6 | 1 | 1 | 1 | 1 | 1 | 1 | 0 | 0 | 0 | 6 |
| | BL7 | 1 | 1 | 1 | 1 | 0 | 0 | 0 | 0 | 0 | 4 |
| | BL8 | 1 | 1 | 1 | 1 | 1 | 1 | 1 | 1 | 0 | 8 |
| | BL9 | 1 | 1 | 1 | 1 | 0 | 0 | 0 | 0 | 0 | 4 |
| | BL10 | 0 | 0 | 0 | 0 | 0 | 0 | 0 | 0 | 0 | 0 |
| | BL11 | 0 | 0 | 0 | 0 | 1 | 1 | 1 | 1 | 0 | 4 |
| | BL12 | 0 | 0 | 0 | 0 | 0 | 0 | 1 | 1 | 0 | 2 |
| | BL13 | 0 | 0 | 0 | 0 | 1 | 1 | 1 | 1 | 0 | 4 |
| | BL14 | 1 | 1 | 1 | 1 | 1 | 1 | 0 | 0 | 0 | 6 |
| | BL15 | 1 | 1 | 1 | 1 | 0 | 0 | 0 | 0 | 0 | 4 |
| Pattern B' | BL0 | 0 | 0 | 0 | 0 | 0 | 0 | 1 | 1 | 0 | 2 |
| | BL1 | 0 | 0 | 0 | 0 | 1 | 1 | 1 | 1 | 0 | 4 |
| | BL2 | 1 | 1 | 1 | 1 | 1 | 1 | 0 | 0 | 0 | 6 |
| | BL3 | 1 | 1 | 1 | 1 | 0 | 0 | 0 | 0 | 0 | 4 |
| | BL4 | 1 | 1 | 1 | 1 | 1 | 1 | 1 | 1 | 0 | 8 |
| | BL5 | 1 | 1 | 1 | 1 | 0 | 0 | 0 | 0 | 0 | 4 |
| | BL6 | 0 | 0 | 0 | 0 | 0 | 0 | 0 | 0 | 0 | 0 |
| | BL7 | 0 | 0 | 0 | 0 | 1 | 1 | 1 | 1 | 0 | 4 |
| | BL8 | 1 | 1 | 1 | 1 | 1 | 1 | 0 | 0 | 0 | 6 |
| | BL9 | 1 | 1 | 1 | 1 | 0 | 0 | 0 | 0 | 0 | 4 |
| | BL10 | 0 | 0 | 0 | 0 | 0 | 0 | 1 | 1 | 0 | 2 |
| | BL11 | 0 | 0 | 0 | 0 | 1 | 1 | 1 | 1 | 0 | 4 |
| | BL12 | 0 | 0 | 0 | 0 | 0 | 0 | 0 | 0 | 0 | 0 |
| | BL13 | 0 | 0 | 0 | 0 | 1 | 1 | 1 | 1 | 0 | 4 |
| | BL14 | 1 | 1 | 1 | 1 | 1 | 1 | 1 | 1 | 0 | 8 |
| | BL15 | 1 | 1 | 1 | 1 | 0 | 0 | 0 | 0 | 0 | 4 |
| # of 1`s | | 32 | 32 | 32 | 32 | 32 | 32 | 32 | 32 | 0 | |

NOTE 1 Pattern A' is defined by B3 ordering change based on pattern A.
NOTE 2 Pattern B' is defined by B3 ordering change based on pattern B.

## 14.1 IDD Measurement Conditions (Cont'd)

**Table 415 — Data Pattern for IDD4W @ DBI Off**

| DQs – IDD4W DBI OFF | | | | | | | | | | | # of 1`s |
|---|---|---|---|---|---|---|---|---|---|---|---|
| Type | BL | DQ[7] | DQ[6] | DQ[5] | DQ[4] | DQ[3] | DQ[2] | DQ[1] | DQ[0] | DBI | |
| Pattern A | BL0 | 1 | 1 | 1 | 1 | 1 | 1 | 1 | 1 | 0 | 8 |
| | BL1 | 1 | 1 | 1 | 1 | 0 | 0 | 0 | 0 | 0 | 4 |
| | BL2 | 0 | 0 | 0 | 0 | 0 | 0 | 0 | 0 | 0 | 0 |
| | BL3 | 0 | 0 | 0 | 0 | 1 | 1 | 1 | 1 | 0 | 4 |
| | BL4 | 0 | 0 | 0 | 0 | 0 | 0 | 1 | 1 | 0 | 2 |
| | BL5 | 0 | 0 | 0 | 0 | 1 | 1 | 1 | 1 | 0 | 4 |
| | BL6 | 1 | 1 | 1 | 1 | 1 | 1 | 0 | 0 | 0 | 6 |
| | BL7 | 1 | 1 | 1 | 1 | 0 | 0 | 0 | 0 | 0 | 4 |
| | BL8 | 1 | 1 | 1 | 1 | 1 | 1 | 1 | 1 | 0 | 8 |
| | BL9 | 1 | 1 | 1 | 1 | 0 | 0 | 0 | 0 | 0 | 4 |
| | BL10 | 0 | 0 | 0 | 0 | 0 | 0 | 0 | 0 | 0 | 0 |
| | BL11 | 0 | 0 | 0 | 0 | 1 | 1 | 1 | 1 | 0 | 4 |
| | BL12 | 0 | 0 | 0 | 0 | 0 | 0 | 1 | 1 | 0 | 2 |
| | BL13 | 0 | 0 | 0 | 0 | 1 | 1 | 1 | 1 | 0 | 4 |
| | BL14 | 1 | 1 | 1 | 1 | 1 | 1 | 0 | 0 | 0 | 6 |
| | BL15 | 1 | 1 | 1 | 1 | 0 | 0 | 0 | 0 | 0 | 4 |
| Pattern B | BL0 | 1 | 1 | 1 | 1 | 1 | 1 | 0 | 0 | 0 | 6 |
| | BL1 | 1 | 1 | 1 | 1 | 0 | 0 | 0 | 0 | 0 | 4 |
| | BL2 | 0 | 0 | 0 | 0 | 0 | 0 | 1 | 1 | 0 | 2 |
| | BL3 | 0 | 0 | 0 | 0 | 1 | 1 | 1 | 1 | 0 | 4 |
| | BL4 | 0 | 0 | 0 | 0 | 0 | 0 | 0 | 0 | 0 | 0 |
| | BL5 | 0 | 0 | 0 | 0 | 1 | 1 | 1 | 1 | 0 | 4 |
| | BL6 | 1 | 1 | 1 | 1 | 1 | 1 | 1 | 1 | 0 | 8 |
| | BL7 | 1 | 1 | 1 | 1 | 0 | 0 | 0 | 0 | 0 | 4 |
| | BL8 | 0 | 0 | 0 | 0 | 0 | 0 | 1 | 1 | 0 | 2 |
| | BL9 | 0 | 0 | 0 | 0 | 1 | 1 | 1 | 1 | 0 | 4 |
| | BL10 | 1 | 1 | 1 | 1 | 1 | 1 | 0 | 0 | 0 | 6 |
| | BL11 | 1 | 1 | 1 | 1 | 0 | 0 | 0 | 0 | 0 | 4 |
| | BL12 | 1 | 1 | 1 | 1 | 1 | 1 | 1 | 1 | 0 | 8 |
| | BL13 | 1 | 1 | 1 | 1 | 0 | 0 | 0 | 0 | 0 | 4 |
| | BL14 | 0 | 0 | 0 | 0 | 0 | 0 | 0 | 0 | 0 | 0 |
| | BL15 | 0 | 0 | 0 | 0 | 1 | 1 | 1 | 1 | 0 | 4 |
| # of 1`s | | 16 | 16 | 16 | 16 | 16 | 16 | 16 | 16 | 0 | |

## 14.1 IDD Measurement Conditions (Cont'd)

**Table 416 — Data Pattern for IDD4R @ DBI On**

| DQs – IDD4R DBI ON | | | | | | | | | | | # of 1`s |
|---|---|---|---|---|---|---|---|---|---|---|---|
| Type | BL | DQ[7] | DQ[6] | DQ[5] | DQ[4] | DQ[3] | DQ[2] | DQ[1] | DQ[0] | DBI | |
| Pattern A | BL0 | 0 | 0 | 0 | 0 | 0 | 0 | 0 | 0 | 1 | 1 |
| | BL1 | 1 | 1 | 1 | 1 | 0 | 0 | 0 | 0 | 0 | 4 |
| | BL2 | 0 | 0 | 0 | 0 | 0 | 0 | 0 | 0 | 0 | 0 |
| | BL3 | 0 | 0 | 0 | 0 | 1 | 1 | 1 | 1 | 0 | 4 |
| | BL4 | 0 | 0 | 0 | 0 | 0 | 0 | 1 | 1 | 0 | 2 |
| | BL5 | 0 | 0 | 0 | 0 | 1 | 1 | 1 | 1 | 0 | 4 |
| | BL6 | 0 | 0 | 0 | 0 | 0 | 0 | 1 | 1 | 1 | 3 |
| | BL7 | 1 | 1 | 1 | 1 | 0 | 0 | 0 | 0 | 0 | 4 |
| | BL8 | 0 | 0 | 0 | 0 | 0 | 0 | 0 | 0 | 1 | 1 |
| | BL9 | 1 | 1 | 1 | 1 | 0 | 0 | 0 | 0 | 0 | 4 |
| | BL10 | 0 | 0 | 0 | 0 | 0 | 0 | 0 | 0 | 0 | 0 |
| | BL11 | 0 | 0 | 0 | 0 | 1 | 1 | 1 | 1 | 0 | 4 |
| | BL12 | 0 | 0 | 0 | 0 | 0 | 0 | 1 | 1 | 0 | 2 |
| | BL13 | 0 | 0 | 0 | 0 | 1 | 1 | 1 | 1 | 0 | 4 |
| | BL14 | 0 | 0 | 0 | 0 | 0 | 0 | 1 | 1 | 1 | 3 |
| | BL15 | 1 | 1 | 1 | 1 | 0 | 0 | 0 | 0 | 0 | 4 |
| Pattern B | BL0 | 0 | 0 | 0 | 0 | 0 | 0 | 1 | 1 | 1 | 3 |
| | BL1 | 1 | 1 | 1 | 1 | 0 | 0 | 0 | 0 | 0 | 4 |
| | BL2 | 0 | 0 | 0 | 0 | 0 | 0 | 1 | 1 | 0 | 2 |
| | BL3 | 0 | 0 | 0 | 0 | 1 | 1 | 1 | 1 | 0 | 4 |
| | BL4 | 0 | 0 | 0 | 0 | 0 | 0 | 0 | 0 | 0 | 0 |
| | BL5 | 0 | 0 | 0 | 0 | 1 | 1 | 1 | 1 | 0 | 4 |
| | BL6 | 0 | 0 | 0 | 0 | 0 | 0 | 0 | 0 | 1 | 1 |
| | BL7 | 1 | 1 | 1 | 1 | 0 | 0 | 0 | 0 | 0 | 4 |
| | BL8 | 0 | 0 | 0 | 0 | 0 | 0 | 1 | 1 | 0 | 2 |
| | BL9 | 0 | 0 | 0 | 0 | 1 | 1 | 1 | 1 | 0 | 4 |
| | BL10 | 0 | 0 | 0 | 0 | 0 | 0 | 1 | 1 | 1 | 3 |
| | BL11 | 1 | 1 | 1 | 1 | 0 | 0 | 0 | 0 | 0 | 4 |
| | BL12 | 0 | 0 | 0 | 0 | 0 | 0 | 0 | 0 | 1 | 1 |
| | BL13 | 1 | 1 | 1 | 1 | 0 | 0 | 0 | 0 | 0 | 4 |
| | BL14 | 0 | 0 | 0 | 0 | 0 | 0 | 0 | 0 | 0 | 0 |
| | BL15 | 0 | 0 | 0 | 0 | 1 | 1 | 1 | 1 | 0 | 4 |

## 14.1 IDD Measurement Conditions (Cont'd)

**Data Pattern for IDD4R @ DBI On (Cont'd)**

| DQs – IDD4R DBI ON | | | | | | | | | | | # of |
|---|---|---|---|---|---|---|---|---|---|---|---|
| Type | BL | DQ[7] | DQ[6] | DQ[5] | DQ[4] | DQ[3] | DQ[2] | DQ[1] | DQ[0] | DBI | 1`s |
| Pattern A' | BL0 | 0 | 0 | 0 | 0 | 0 | 0 | 0 | 0 | 1 | 1 |
| | BL1 | 1 | 1 | 1 | 1 | 0 | 0 | 0 | 0 | 0 | 4 |
| | BL2 | 0 | 0 | 0 | 0 | 0 | 0 | 0 | 0 | 0 | 0 |
| | BL3 | 0 | 0 | 0 | 0 | 1 | 1 | 1 | 1 | 0 | 4 |
| | BL4 | 0 | 0 | 0 | 0 | 0 | 0 | 1 | 1 | 0 | 2 |
| | BL5 | 0 | 0 | 0 | 0 | 1 | 1 | 1 | 1 | 0 | 4 |
| | BL6 | 0 | 0 | 0 | 0 | 0 | 0 | 1 | 1 | 1 | 3 |
| | BL7 | 1 | 1 | 1 | 1 | 0 | 0 | 0 | 0 | 0 | 4 |
| | BL8 | 0 | 0 | 0 | 0 | 0 | 0 | 0 | 0 | 1 | 1 |
| | BL9 | 1 | 1 | 1 | 1 | 0 | 0 | 0 | 0 | 0 | 4 |
| | BL10 | 0 | 0 | 0 | 0 | 0 | 0 | 0 | 0 | 0 | 0 |
| | BL11 | 0 | 0 | 0 | 0 | 1 | 1 | 1 | 1 | 0 | 4 |
| | BL12 | 0 | 0 | 0 | 0 | 0 | 0 | 1 | 1 | 0 | 2 |
| | BL13 | 0 | 0 | 0 | 0 | 1 | 1 | 1 | 1 | 0 | 4 |
| | BL14 | 0 | 0 | 0 | 0 | 0 | 0 | 1 | 1 | 1 | 3 |
| | BL15 | 1 | 1 | 1 | 1 | 0 | 0 | 0 | 0 | 0 | 4 |
| Pattern B' | BL0 | 0 | 0 | 0 | 0 | 0 | 0 | 1 | 1 | 0 | 2 |
| | BL1 | 0 | 0 | 0 | 0 | 1 | 1 | 1 | 1 | 0 | 4 |
| | BL2 | 0 | 0 | 0 | 0 | 0 | 0 | 1 | 1 | 1 | 3 |
| | BL3 | 1 | 1 | 1 | 1 | 0 | 0 | 0 | 0 | 0 | 4 |
| | BL4 | 0 | 0 | 0 | 0 | 0 | 0 | 0 | 0 | 1 | 1 |
| | BL5 | 1 | 1 | 1 | 1 | 0 | 0 | 0 | 0 | 0 | 4 |
| | BL6 | 0 | 0 | 0 | 0 | 0 | 0 | 0 | 0 | 0 | 0 |
| | BL7 | 0 | 0 | 0 | 0 | 1 | 1 | 1 | 1 | 0 | 4 |
| | BL8 | 0 | 0 | 0 | 0 | 0 | 0 | 1 | 1 | 1 | 3 |
| | BL9 | 1 | 1 | 1 | 1 | 0 | 0 | 0 | 0 | 0 | 4 |
| | BL10 | 0 | 0 | 0 | 0 | 0 | 0 | 1 | 1 | 0 | 2 |
| | BL11 | 0 | 0 | 0 | 0 | 1 | 1 | 1 | 1 | 0 | 4 |
| | BL12 | 0 | 0 | 0 | 0 | 0 | 0 | 0 | 0 | 0 | 0 |
| | BL13 | 0 | 0 | 0 | 0 | 1 | 1 | 1 | 1 | 0 | 4 |
| | BL14 | 0 | 0 | 0 | 0 | 0 | 0 | 0 | 0 | 1 | 1 |
| | BL15 | 1 | 1 | 1 | 1 | 0 | 0 | 0 | 0 | 0 | 4 |
| # of 1's | | 16 | 16 | 16 | 16 | 16 | 16 | 32 | 32 | 16 | |

NOTE 1 Pattern A' is defined by B3 ordering change based on pattern A.
NOTE 2 Pattern B' is defined by B3 ordering change based on pattern B.

## 14.1 IDD Measurement Conditions (Cont'd)

**Table 417 — Data Pattern for IDD4W @ DBI On**

| DQs – IDD4W DBI ON | | | | | | | | | | | # of 1`s |
|---|---|---|---|---|---|---|---|---|---|---|---|
| Type | BL | DQ[7] | DQ[6] | DQ[5] | DQ[4] | DQ[3] | DQ[2] | DQ[1] | DQ[0] | DBI | |
| Pattern A | BL0 | 0 | 0 | 0 | 0 | 0 | 0 | 0 | 0 | 1 | 1 |
| | BL1 | 1 | 1 | 1 | 1 | 0 | 0 | 0 | 0 | 0 | 4 |
| | BL2 | 0 | 0 | 0 | 0 | 0 | 0 | 0 | 0 | 0 | 0 |
| | BL3 | 0 | 0 | 0 | 0 | 1 | 1 | 1 | 1 | 0 | 4 |
| | BL4 | 0 | 0 | 0 | 0 | 0 | 0 | 1 | 1 | 0 | 2 |
| | BL5 | 0 | 0 | 0 | 0 | 1 | 1 | 1 | 1 | 0 | 4 |
| | BL6 | 0 | 0 | 0 | 0 | 0 | 0 | 1 | 1 | 1 | 3 |
| | BL7 | 1 | 1 | 1 | 1 | 0 | 0 | 0 | 0 | 0 | 4 |
| | BL8 | 0 | 0 | 0 | 0 | 0 | 0 | 0 | 0 | 1 | 1 |
| | BL9 | 1 | 1 | 1 | 1 | 0 | 0 | 0 | 0 | 0 | 4 |
| | BL10 | 0 | 0 | 0 | 0 | 0 | 0 | 0 | 0 | 0 | 0 |
| | BL11 | 0 | 0 | 0 | 0 | 1 | 1 | 1 | 1 | 0 | 4 |
| | BL12 | 0 | 0 | 0 | 0 | 0 | 0 | 1 | 1 | 0 | 2 |
| | BL13 | 0 | 0 | 0 | 0 | 1 | 1 | 1 | 1 | 0 | 4 |
| | BL14 | 0 | 0 | 0 | 0 | 0 | 0 | 1 | 1 | 1 | 3 |
| | BL15 | 1 | 1 | 1 | 1 | 0 | 0 | 0 | 0 | 0 | 4 |
| Pattern B | BL0 | 0 | 0 | 0 | 0 | 0 | 0 | 1 | 1 | 1 | 3 |
| | BL1 | 1 | 1 | 1 | 1 | 0 | 0 | 0 | 0 | 0 | 4 |
| | BL2 | 0 | 0 | 0 | 0 | 0 | 0 | 1 | 1 | 0 | 2 |
| | BL3 | 0 | 0 | 0 | 0 | 1 | 1 | 1 | 1 | 0 | 4 |
| | BL4 | 0 | 0 | 0 | 0 | 0 | 0 | 0 | 0 | 0 | 0 |
| | BL5 | 0 | 0 | 0 | 0 | 1 | 1 | 1 | 1 | 0 | 4 |
| | BL6 | 0 | 0 | 0 | 0 | 0 | 0 | 0 | 0 | 1 | 1 |
| | BL7 | 1 | 1 | 1 | 1 | 0 | 0 | 0 | 0 | 0 | 4 |
| | BL8 | 0 | 0 | 0 | 0 | 0 | 0 | 1 | 1 | 0 | 2 |
| | BL9 | 0 | 0 | 0 | 0 | 1 | 1 | 1 | 1 | 0 | 4 |
| | BL10 | 0 | 0 | 0 | 0 | 0 | 0 | 1 | 1 | 1 | 3 |
| | BL11 | 1 | 1 | 1 | 1 | 0 | 0 | 0 | 0 | 0 | 4 |
| | BL12 | 0 | 0 | 0 | 0 | 0 | 0 | 0 | 0 | 1 | 1 |
| | BL13 | 1 | 1 | 1 | 1 | 0 | 0 | 0 | 0 | 0 | 4 |
| | BL14 | 0 | 0 | 0 | 0 | 0 | 0 | 0 | 0 | 0 | 0 |
| | BL15 | 0 | 0 | 0 | 0 | 1 | 1 | 1 | 1 | 0 | 4 |
| # of 1`s | | 8 | 8 | 8 | 8 | 8 | 8 | 16 | 16 | 8 | |

## 14.2 IDD Specifications

**Table 418 — LPDDR5 IDD Specification Parameters and Operating Conditions**

| Parameter / Condition | Symbol | Power Supply | Note |
|---|---|---|---|
| **Operating one bank active-Precharge current:**<br>tCK = tCKmin; tRC = tRCmin;<br>CS is LOW between valid commands;<br>CA bus inputs are switching;<br>Data bus inputs are stable<br>RDQS_t is stable (if Link ECC is enabled)<br>ODT disabled<br>WCK inputs are stable | $IDD0_{1}$ | VDD1 | 9 |
| | $IDD0_{2H}$ | VDD2H | 9 |
| | $IDD0_{2L}$ | VDD2L | 9 |
| | $IDD0_{Q}$ | VDDQ | 3 |
| **Idle power-down standby current:**<br>tCK = tCKmin;<br>Power-down entry command is issued<br>CS is LOW;<br>All banks are idle;<br>CA bus inputs are switching;<br>Data bus inputs are stable;<br>RDQS_t is stable (if Link ECC is enabled)<br>ODT disabled<br>WCK inputs are stable | $IDD2P_{1}$ | VDD1 | |
| | $IDD2P_{2H}$ | VDD2H | |
| | $IDD2P_{2L}$ | VDD2L | |
| | $IDD2P_{Q}$ | VDDQ | 3 |
| **Idle power-down standby current with clock stop:**<br>CK_t =LOW, CK_c =HIGH;<br>CS is LOW;<br>All banks are idle;<br>CA bus inputs are stable;<br>Data bus inputs are stable<br>RDQS_t is stable (if Link ECC is enabled)<br>ODT disabled<br>WCK inputs are stable | $IDD2PS_{1}$ | VDD1 | |
| | $IDD2PS_{2H}$ | VDD2H | |
| | $IDD2PS_{2L}$ | VDD2L | |
| | $IDD2PS_{Q}$ | VDDQ | 3 |
| **Idle non power-down standby current:**<br>tCK = tCKmin;<br>CS is LOW;<br>All banks are idle;<br>CA bus inputs are switching;<br>Data bus inputs are stable<br>RDQS_t is stable (if Link ECC is enabled)<br>ODT disabled<br>WCK inputs are stable | $IDD2N_{1}$ | VDD1 | |
| | $IDD2N_{2H}$ | VDD2H | |
| | $IDD2N_{2L}$ | VDD2L | |
| | $IDD2N_{Q}$ | VDDQ | 3 |
| **Idle non power-down standby current with clock stopped:**<br>CK_t=LOW; CK_c=HIGH;<br>CS is LOW;<br>All banks are idle;<br>CA bus inputs are stable;<br>Data bus inputs are stable<br>RDQS_t is stable (if Link ECC is enabled)<br>ODT disabled<br>WCK inputs are stable | $IDD2NS_{1}$ | VDD1 | |
| | $IDD2NS_{2H}$ | VDD2H | |
| | $IDD2NS_{2L}$ | VDD2L | |
| | $IDD2NS_{Q}$ | VDDQ | 3 |
| **Active power-down standby current:**<br>tCK = tCKmin;<br>CS is LOW;<br>One bank is active; Power-down entry command is issued<br>CA bus inputs are switching;<br>Data bus inputs are stable<br>RDQS_t is stable (if Link ECC is enabled)<br>ODT disabled<br>WCK inputs are stable | $IDD3P_{1}$ | VDD1 | 9 |
| | $IDD3P_{2H}$ | VDD2H | 9 |
| | $IDD3P_{2L}$ | VDD2L | 9 |
| | $IDD3P_{Q}$ | VDDQ | 3 |

## 14.2 IDD Specifications (Cont'd)

**LPDDR5 IDD Specification Parameters and Operating Conditions (Cont'd)**

| Parameter / Condition | Symbol | Power Supply | Note |
|---|---|---|---|
| **Active power-down standby current with clock stop:**<br>Power-down entry command is issued<br>CK_t=LOW, CK_c=HIGH;<br>CS is LOW;<br>One bank is active;<br>CA bus inputs are stable;<br>Data bus inputs are stable<br>RDQS_t is stable (if Link ECC is enabled)<br>ODT disabled<br>WCK inputs are stable and static | $IDD3PS_1$ | VDD1 | 9 |
| | $IDD3PS_{2H}$ | VDD2H | 9 |
| | $IDD3PS_{2L}$ | VDD2L | 8, 9 |
| | $IDD3PS_Q$ | VDDQ | 4 |
| **Active non-power-down standby current:**<br>tCK = tCKmin;<br>CS is LOW;<br>One bank is active;<br>CA bus inputs are switching;<br>Data bus inputs are stable<br>RDQS_t is stable (if Link ECC is enabled)<br>ODT disabled<br>WCK inputs are stable and static | $IDD3N_1$ | VDD1 | 9 |
| | $IDD3N_{2H}$ | VDD2H | 9 |
| | $IDD3N_{2L}$ | VDD2L | 8, 9 |
| | $IDD3N_Q$ | VDDQ | 4 |
| **Active non-power-down standby current with clock stopped:**<br>CK_t=LOW, CK_c=HIGH;<br>CS is LOW;<br>One bank is active;<br>CA bus inputs are stable;<br>Data bus inputs are stable<br>RDQS_t is stable (if Link ECC is enabled)<br>ODT disabled<br>WCK inputs are stable and static | $IDD3NS_1$ | VDD1 | 9 |
| | $IDD3NS_{2H}$ | VDD2H | 9 |
| | $IDD3NS_{2L}$ | VDD2L | 8, 9 |
| | $IDD3NS_Q$ | VDDQ | 4 |
| **Operating burst READ current @ BG Mode**<br>tCK = tCKmin; tWCK=tWCKmin;<br>CS is LOW between valid commands;<br>**One bank in each bank group 1 and 2 is active;**<br>BL = 16 or 32 ; RL = RLmin;<br>CA bus inputs are switching;<br>50% data change each burst transfer<br>ODT disabled | $IDD4R_1$ | VDD1 | |
| | $IDD4R_{2H}$ | VDD2H | |
| | $IDD4R_{2L}$ | VDD2L | 8 |
| | $IDD4R_Q$ | VDDQ | 5 |
| **Operating burst READ current @ 8/16Bank Mode**<br>tCK = tCKmin; tWCK=tWCKmin;<br>CS is LOW between valid commands;<br>**One banks is active;**<br>BL = 16 or 32 @ 16bank mode, BL=32 @ 8bank mode; RL = RLmin;<br>CA bus inputs are switching;<br>50% data change each burst transfer<br>ODT disabled | $IDD4R_1$ | VDD1 | |
| | $IDD4R_{2H}$ | VDD2H | |
| | $IDD4R_{2L}$ | VDD2L | 8 |
| | $IDD4R_Q$ | VDDQ | 5 |
| **Operating burst WRITE current @ BG Mode**<br>tCK = tCKmin; tWCK=tWCKmin;<br>CS is LOW between valid commands;<br>**One bank in each bank group 1 and 2 is active;**<br>BL = 16 or 32 ; WL = WLmin;<br>CA bus inputs are switching;<br>50% data change each burst transfer<br>RDQS_t is stable (if Link ECC is enabled)<br>ODT disabled | $IDD4W_1$ | VDD1 | |
| | $IDD4W_{2H}$ | VDD2H | |
| | $IDD4W_{2L}$ | VDD2L | 8 |
| | $IDD4W_Q$ | VDDQ | 4 |

## 14.2 IDD Specifications (Cont'd)

**LPDDR5 IDD Specification Parameters and Operating Conditions (Cont'd)**

| Parameter / Condition | Symbol | Power Supply | Note |
|---|---|---|---|
| **Operating burst WRITE current @ 8/16Bank Mode**<br>tCK = tCKmin; tWCK=tWCKmin;<br>CS is LOW between valid commands;<br>**One bank~~s~~ is active;**<br>BL = 16 or 32 @ 16bank mode, BL=32 @ 8bank mode ; WL = WLmin;<br>CA bus inputs are switching;<br>50% data change each burst transfer<br>RDQS_t is stable (if Link ECC is enabled)<br>ODT disabled | $IDD4W_1$ | VDD1 | |
| | $IDD4W_{2H}$ | VDD2H | |
| | $IDD4W_{2L}$ | VDD2L | 8 |
| | $IDD4W_Q$ | VDDQ | 4 |
| **All-bank REFRESH Burst current:**<br>tCK = tCKmin;<br>CS is LOW between valid commands;<br>tRC = tRFCabmin;<br>Burst refresh;<br>CA bus inputs are switching;<br>Data bus inputs are stable;<br>RDQS_t is stable (if Link ECC is enabled)<br>ODT disabled<br>WCK inputs are stable and static | $IDD5_1$ | VDD1 | |
| | $IDD5_{2H}$ | VDD2H | |
| | $IDD5_{2L}$ | VDD2L | 8 |
| | $IDD5_Q$ | VDDQ | 4 |
| **All-bank REFRESH Average current:**<br>tCK = tCKmin;<br>CS is LOW between valid commands;<br>tRC = tREFI;<br>CA bus inputs are switching;<br>Data bus inputs are stable;<br>RDQS_t is stable (if Link ECC is enabled)<br>ODT disabled<br>WCK inputs are stable and static | $IDD5AB_1$ | VDD1 | |
| | $IDD5AB_{2H}$ | VDD2H | |
| | $IDD5AB_{2L}$ | VDD2L | 8 |
| | $IDD5AB_Q$ | VDDQ | 4 |
| **Per-bank REFRESH Average current:**<br>tCK = tCKmin;<br>CS is LOW between valid commands;<br>tRC = tREFI/8;<br>CA bus inputs are switching;<br>Data bus inputs are stable;<br>RDQS_t is stable (if Link ECC is enabled)<br>ODT disabled<br>WCK inputs are stable and static | $IDD5PB_1$ | VDD1 | |
| | $IDD5PB_{2H}$ | VDD2H | |
| | $IDD5PB_{2L}$ | VDD2L | 8 |
| | $IDD5PB_Q$ | VDDQ | 4 |
| **Power down Self refresh current:**<br>CK_t=LOW, CK_c=HIGH;<br>CS is LOW;<br>CA bus inputs are stable;<br>Data bus inputs are stable;<br>Maximum 1x Self-Refresh Rate; (≤85°C)<br>Maximum TBDx Self-Refresh Rate; (>85°C)<br>RDQS_t is stable (if Link ECC is enabled)<br>ODT disabled<br>WCK inputs are stable and static | $IDD6_1$ | VDD1 | 6,7 |
| | $IDD6_{2H}$ | VDD2H | 6,7 |
| | $IDD6_{2L}$ | VDD2L | 6,7,8 |
| | $IDD6_Q$ | VDDQ | 4,6,7,8 |

## 14.2 IDD Specifications (Cont'd)

**LPDDR5 IDD Specification Parameters and Operating Conditions (Cont'd)**

| Parameter / Condition | Symbol | Power Supply | Note |
|---|---|---|---|
| **Deep sleep mode current:**<br>CK_t=LOW, CK_c=HIGH;<br>CS is LOW;<br>CA bus inputs are stable;<br>Data bus inputs are stable;<br>Maximum 1x Self-Refresh Rate; (≤85°C)<br>Maximum TBDx Self-Refresh Rate; (>85°C)<br>RDQS_t is stable (if Link ECC is enabled)<br>ODT disabled<br>WCK inputs are stable and static | $IDD6_{DS1}$ | VDD1 | 6,7,~~8~~ |
| | $IDD6_{DS2H}$ | VDD2H | 6,7 |
| | $IDD6_{DS2L}$ | VDD2L | 6,7,8 |
| | $IDD6_{DSQ}$ | VDDQ | 4,6,7 |

NOTE 1 Published IDD values are the maximum of the distribution of the arithmetic mean.
NOTE 2 ODT disabled. MR11 OP[6:4] = $000_B$
NOTE 3 IDD current specifications are tested after the device is properly initialized.
NOTE 4 Measured currents are the summation of VDDQ and VDD2H / VDD2L.
NOTE 5 Guaranteed by design with output load = 5pF and RON = 40 ohm.
NOTE 6 The 1x Self-Refresh Rate is the rate at which the LPDDR5 device is refreshed internally during Self-Refresh, before going into the elevated Temperature range.
NOTE 7 This is the general definition that applies to full array Self Refresh.
NOTE 8 When MR13 OP[7] is high, single VDD2 rail, VDD2L Current shall be added to VDD2H Current.
NOTE 9 IDD values can be different according to the bank organization set by MR3 OP[4:3].
NOTE 10 When DVFSC is enabled, the minimum tCK shall be set by following DVFSC operating frequency.

# 15 Electrical Characteristics and AC Timing

## 15.1 Clock Specification

The jitter specified is a random jitter meeting a Gaussian distribution. Input clocks violating the min/max values may result in malfunction of the LPDDR5 device.

### 15.1.1 Definition for tCK(avg) and nCK

tCK(avg) is calculated as the average clock period across any consecutive 200 cycle window, where each clock period is calculated from rising edge to rising edge.

$$tCK(avg) = \left(\sum_{j=1}^{N} tCKj\right)/N$$

$$where\ N = 200$$

Unit "tCK(avg)" represents the actual clock average tCK(avg) of the input clock under operation. Unit "nCK" represents one clock cycle of the input clock, counting the actual clock edges. tCK(avg) may change by up to +/-1% within a 100 clock cycle window, provided that all jitter and timing specs are met.

### 15.1.2 Definition for tCK(abs)

tCK(abs) is defined as the absolute clock period, as measured from one rising edge to the next consecutive rising edge.

tCK(abs) is not subject to production test.

### 15.1.3 Definition for tCH(avg) and tCL(avg)

tCH(avg) is defined as the average high pulse width, as calculated across any consecutive 200 high pulses.

$$CH(avg) = \left(\sum_{j=1}^{N} tCHj\right)/(N \times tCK(avg))$$

$$where\ N = 200$$

tCL(avg) is defined as the average low pulse width, as calculated across any consecutive 200 low pulses.

$$tCL(avg) = \left(\sum_{j=1}^{N} tCLj\right)/(N \times tCK(avg))$$

$$where\ N = 200$$

### 15.1.4 Definition for tCH(abs) and tCL(abs)

tCH(abs) is the absolute instantaneous clock high pulse width, as measured from one rising edge to the following falling edge.

tCL(abs) is the absolute instantaneous clock low pulse width, as measured from one falling edge to the following rising edge.

Both tCH(abs) and tCL(abs) are not subject to production test.

### 15.1.5 Definition for tJIT(per)

tJIT(per) is the single period jitter defined as the largest deviation of any signal tCK from tCK(avg).

tJIT(per) = Min/max of {tCKi - tCK(avg) where i = 1 to 200}.

tJIT(per),act is the actual clock jitter for a given system.

tJIT(per),allowed is the specified allowed clock period jitter.

tJIT(per) is not subject to production test.

### 15.1.6 Definition for tJIT(cc)

tJIT(cc) is defined as the absolute difference in clock period between two consecutive clock cycles.

tJIT(cc) = Max of |{tCK(i +1) - tCK(i)}|.

tJIT(cc) defines the cycle to cycle jitter.

tJIT(cc) is not subject to production test.

### 15.1.7 Clock Timing

**Table 419 — Clock AC Timings for 5/10/67/133MHz**

| Parameter | Symbol | 5MHz | | 10MHz | | 67MHz | | 133MHz | | Units | Notes |
|---|---|---|---|---|---|---|---|---|---|---|---|
| | | Min | Max | Min | Max | Min | Max | Min | Max | | |
| Average clock period | tCK(avg) | 200 | 200 | 100 | 200 | 14.93 | 200 | 7.5 | 200 | ns | |
| Average High pulse width | tCH(avg) | 0.46 | 0.54 | 0.46 | 0.54 | 0.46 | 0.54 | 0.46 | 0.54 | tCK(avg) | |
| Average Low pulse width | tCL(avg) | 0.46 | 0.54 | 0.46 | 0.54 | 0.46 | 0.54 | 0.46 | 0.54 | tCK(avg) | |
| Absolute clock period | tCK(abs) | tCK(avg) MIN + tJIT(per) MIN | - | tCK(avg) MIN + tJIT(per) MIN | - | tCK(avg) MIN + tJIT(per) MIN | - | tCK(avg) MIN + tJIT(per) MIN | - | ns | |
| Absolute High clock pulse width | tCH(abs) | 0.43 | 0.57 | 0.43 | 0.57 | 0.43 | 0.57 | 0.43 | 0.57 | tCK(avg) | |
| Absolute Low clock pulse width | tCL(abs) | 0.43 | 0.57 | 0.43 | 0.57 | 0.43 | 0.57 | 0.43 | 0.57 | tCK(avg) | |
| Clock period jitter | tJIT(per) | -11200 | 11200 | -5600 | 5600 | -840 | 840 | -430 | 430 | ps | |
| Maximum Clock Jitter between consecutive cycles | tJIT(cc) | - | 22400 | - | 11200 | - | 1680 | - | 860 | ps | |

### 15.1.7 Clock Timing (Cont'd)

**Table 420 — Clock AC Timings for 200/267/344/400MHz**

| Parameter | Symbol | 200MHz | | 267MHz | | 344MHz | | 400MHz | | Units | Notes |
|---|---|---|---|---|---|---|---|---|---|---|---|
| | | Min | Max | Min | Max | Min | Max | Min | Max | | |
| Average clock period | tCK(avg) | 5 | 200 | 3.75 | 200 | 2.9 | 200 | 2.5 | 200 | ns | |
| Average High pulse width | tCH(avg) | 0.46 | 0.54 | 0.46 | 0.54 | 0.46 | 0.54 | 0.46 | 0.54 | tCK(avg) | |
| Average Low pulse width | tCL(avg) | 0.46 | 0.54 | 0.46 | 0.54 | 0.46 | 0.54 | 0.46 | 0.54 | tCK(avg) | |
| Absolute clock period | tCK(abs) | tCK(avg) MIN + tJIT(per) MIN | - | tCK(avg) MIN + tJIT(per) MIN | - | tCK(avg) MIN + tJIT(per) MIN | - | tCK(avg) MIN + tJIT(per) MIN | - | ns | |
| Absolute High clock pulse width | tCH(abs) | 0.43 | 0.57 | 0.43 | 0.57 | 0.43 | 0.57 | 0.43 | 0.57 | tCK(avg) | |
| Absolute Low clock pulse width | tCL(abs) | 0.43 | 0.57 | 0.43 | 0.57 | 0.43 | 0.57 | 0.43 | 0.57 | tCK(avg) | |
| Clock period jitter | tJIT(per) | -280 | 280 | -210 | 210 | -170 | 170 | -140 | 140 | ps | |
| Maximum Clock Jitter between consecutive cycles | tJIT(cc) | - | 560 | - | 420 | - | 340 | - | 280 | ps | |

**Table 421 — Clock AC Timings for 467/533/600/688**

| Parameter | Symbol | 467MHz | | 533MHz | | 600MHz | | 688MHz | | Units | Notes |
|---|---|---|---|---|---|---|---|---|---|---|---|
| | | Min | Max | Min | Max | Min | Max | Min | Max | | |
| Average clock period | tCK(avg) | 2.15 | 200 | 1.875 | 200 | 1.667 | 200 | 1.453 | 200 | ns | |
| Average High pulse width | tCH(avg) | 0.46 | 0.54 | 0.46 | 0.54 | 0.46 | 0.54 | 0.46 | 0.54 | tCK(avg) | |
| Average Low pulse width | tCL(avg) | 0.46 | 0.54 | 0.46 | 0.54 | 0.46 | 0.54 | 0.46 | 0.54 | tCK(avg) | |
| Absolute clock period | tCK(abs) | tCK(avg) MIN + tJIT(per) MIN | - | tCK(avg) MIN + tJIT(per) MIN | - | tCK(avg) MIN + tJIT(per) MIN | - | tCK(avg) MIN + tJIT(per) MIN | - | ns | |
| Absolute High clock pulse width | tCH(abs) | 0.43 | 0.57 | 0.43 | 0.57 | 0.43 | 0.57 | 0.43 | 0.57 | tCK(avg) | |
| Absolute Low clock pulse width | tCL(abs) | 0.43 | 0.57 | 0.43 | 0.57 | 0.43 | 0.57 | 0.43 | 0.57 | tCK(avg) | |
| Clock period jitter | tJIT(per) | -120 | 120 | -110 | 110 | -95 | 95 | -85 | 85 | ps | |
| Maximum Clock Jitter between consecutive cycles | tJIT(cc) | - | 240 | - | 220 | - | 190 | - | 170 | ps | |

**Table 422 — Clock AC Timings for 750/800MHz**

| Parameter | Symbol | 750MHz | | 800MHz | | Units | Notes |
|---|---|---|---|---|---|---|---|
| | | Min | Max | Min | Max | | |
| Average clock period | tCK(avg) | 1.333 | 200 | 1.25 | 200 | ns | |
| Average High pulse width | tCH(avg) | 0.46 | 0.54 | 0.46 | 0.54 | tCK(avg) | |
| Average Low pulse width | tCL(avg) | 0.46 | 0.54 | 0.46 | 0.54 | tCK(avg) | |
| Absolute clock period | tCK(abs) | tCK(avg) MIN + tJIT(per) MIN | - | tCK(avg) MIN + tJIT(per) MIN | - | ns | |
| Absolute High clock pulse width | tCH(abs) | 0.43 | 0.57 | 0.43 | 0.57 | tCK(avg) | |
| Absolute Low clock pulse width | tCL(abs) | 0.43 | 0.57 | 0.43 | 0.57 | tCK(avg) | |
| Clock period jitter | tJIT(per) | -75 | 75 | -70 | 70 | ps | |
| Maximum Clock Jitter between consecutive cycles | tJIT(cc) | - | 150 | - | 140 | ps | |

## 15.2 Write Clock Specification

The jitter specified is a random jitter meeting a Gaussian distribution. Input write clocks violating the min/max values may result in malfunction of the LPDDR5 device.

### 15.2.1 Definition for tWCK(avg) and nWCK

tWCK(avg) is calculated as the average write clock period across any consecutive 200 cycle window, where each write clock period is calculated from rising edge to rising edge.

$$tWCK(avg) = \left( \sum_{j=1}^{N} tWCKj \right) / N$$

$$where\ N = 200$$

Unit "tWCK(avg)" represents the actual write clock average tWCK(avg) of the input write clock under operation. Unit "nWCK" represents one write clock cycle of the input write clock, counting the actual write clock edges. tWCK(avg) may change by up to +/-1% within a 100 write clock cycle window, provided that all jitter and timing specs are met.

### 15.2.2 Definition for tWCK(abs)

tWCK(abs) is defined as the absolute write clock period, as measured from one rising edge to the next consecutive rising edge.
tWCK(abs) is not subject to production test.

### 15.2.3 Definition for tWCH(avg) and tWCL(avg)

tWCH(avg) is defined as the average high pulse width, as calculated across any consecutive 200 high pulses.

$$tWCH(avg) = \left( \sum_{j=1}^{N} tWCHj \right) / (N \times tWCK(avg))$$

$$where\ N = 200$$

tWCL(avg) is defined as the average low pulse width, as calculated across any consecutive 200 low pulses.

$$tWCL(avg) = \left( \sum_{j=1}^{N} tWCLj \right) / (N \times tWCK(avg))$$

$$where\ N = 200$$

### 15.2.4 Definition for tWCH(abs) and tWCL(abs)

tWCH(abs) is the absolute instantaneous write clock high pulse width, as measured from one rising edge to the following falling edge.

tWCL(abs) is the absolute instantaneous write clock low pulse width, as measured from one falling edge to the following rising edge.

Both tWCH(abs) and tWCL(abs) are not subject to production test.

### 15.2.5 Definition for tJIT(per)

tJIT(per) is the single period jitter defined as the largest deviation of any signal tWCK from tWCK(avg).

tJIT(per) = Min/max of {tWCKi - tWCK(avg) where i = 1 to 200}.

tJIT(per),act is the actual write clock jitter for a given system.

tJIT(per),allowed is the specified allowed write clock period jitter.

tJIT(per) is not subject to production test.

### 15.2.6 Definition for tJIT(cc)

tJIT(cc) is defined as the absolute difference in write clock period between two consecutive write clock cycles.

tJIT(cc) = Max of |{tWCK(i +1) - tWCK(i)}|.

tJIT(cc) defines the cycle to cycle jitter.

tJIT(cc) is not subject to production test.

### 15.2.7 Definition for tERR(2per)

tERR(2per) is defined as the cumulative error across 2 consecutive cycles from tWCK(avg). tERR(2per) is not subject to production test.

$$tERR(nper) = \left( \sum_{j=1}^{i + n - 1} tWCKj \right) - n \times tWCK(avg)$$

$$where\ N = 2$$

### 15.2.8 Definition for tERR(3per)

tERR(3per) is defined as the cumulative error across 3 consecutive cycles from tWCK(avg). tERR(3per) is not subject to production test.

$$tERR(nper) = \left( \sum_{j=1}^{i + n - 1} tWCKj \right) - n \times tWCK(avg)$$

$$where\ N = 3$$

### 15.2.9 Definition for tERR(4per)

tERR(4per) is defined as the cumulative error across 4 consecutive cycles from tWCK(avg). tERR(4per) is not subject to production test.

$$tERR(nper) = \left( \sum_{j=1}^{i+n-1} tWCKj \right) - n \times tWCK(avg)$$

$$where\ N = 4$$

### 15.2.10 Write Clock Timing

**Table 423 — Write Clock AC Timings for 266/533/800/1067MHz**

| Parameter | Symbol | 266MHz | | 533MHz | | 800MHz | | 1067MHz | | Units | Notes |
|---|---|---|---|---|---|---|---|---|---|---|---|
| | | Min | Max | Min | Max | Min | Max | Min | Max | | |
| Write Clock Timing | | | | | | | | | | | |
| Average Write Clock period | tWCK(avg) | 3.76 | 50 | 1.877 | 50 | 1.25 | 50 | 0.938 | 50 | ns | |
| Average High pulse width | tWCKH(avg) | 0.46 | 0.54 | 0.46 | 0.54 | 0.46 | 0.54 | 0.46 | 0.54 | tWCK (avg) | |
| Average Low pulse width | tWCKL(avg) | 0.46 | 0.54 | 0.46 | 0.54 | 0.46 | 0.54 | 0.46 | 0.54 | tWCK (avg) | |
| Absolute Write Clock period | tWCK(abs) | tWCK (avg) MIN + tJIT(per) MIN | - | tWCK (avg) MIN + tJIT(per) MIN | - | tWCK (avg) MIN + tJIT(per) MIN | - | tWCK (avg) MIN + tJIT(per) MIN | - | ns | |
| Absolute High Write Clock pulse width | tWCKH(abs) | 0.43 | 0.57 | 0.43 | 0.57 | 0.43 | 0.57 | 0.43 | 0.57 | tWCK (avg) | |
| Absolute Low Write Clock pulse width | tWCKL(abs) | 0.43 | 0.57 | 0.43 | 0.57 | 0.43 | 0.57 | 0.43 | 0.57 | tWCK (avg) | |
| Write Clock period jitter tJIT(per) | WCK period jitter tJIT(per) | -190 | 190 | -95 | 95 | -70 | 70 | -56 | 56 | ps | |
| Maximum Write Clock Jitter between consecutive cycles | tJIT(cc) | - | 380 | - | 190 | - | 140 | - | 112 | ps | |
| Cumulative error across 2 cycles | tERR(32per) | TBD | TBD | TBD | TBD | TBD | TBD | TBD | TBD | ps | |
| Cumulative error across 3 cycles | tERR(3per) | TBD | TBD | TBD | TBD | TBD | TBD | TBD | TBD | ps | |
| Cumulative error across 4 cycles | tERR(4per) | TBD | TBD | TBD | TBD | TBD | TBD | TBD | TBD | ps | |

### 15.2.10 Write Clock Timing (Cont'd)

**Table 424 — Write Clock AC Timings for 1375/1600/1867/2134MHz**

| Parameter | Symbol | 1375MHz | | 1600MHz | | 1867MHz | | 2134MHz | | Units | Notes |
|---|---|---|---|---|---|---|---|---|---|---|---|
| | | Min | Max | Min | Max | Min | Max | Min | Max | | |
| Write Clock Timing | | | | | | | | | | | |
| Average Write Clock period | tWCK(avg) | 0.728 | 50 | 0.625 | 50 | 0.536 | 50 | 0.469 | 50 | ns | |
| Average High pulse width | tWCKH(avg) | 0.46 | 0.54 | 0.46 | 0.54 | 0.46 | 0.54 | 0.46 | 0.54 | tWCK(avg) | |
| Average Low pulse width | tWCKL(avg) | 0.46 | 0.54 | 0.46 | 0.54 | 0.46 | 0.54 | 0.46 | 0.54 | tWCK(avg) | |
| Absolute Write Clock period | tWCK(abs) | tWCK(avg) MIN + tJIT(per) MIN | - | tWCK(avg) MIN + tJIT(per) MIN | - | tWCK(avg) MIN + tJIT(per) MIN | - | tWCK(avg) MIN + tJIT(per) MIN | - | ns | |
| Absolute High Write Clock pulse width | tWCKH(abs) | 0.43 | 0.57 | 0.43 | 0.57 | 0.43 | 0.57 | 0.43 | 0.57 | tWCK(avg) | |
| Absolute Low Write Clock pulse width | tWCKL(abs) | 0.43 | 0.57 | 0.43 | 0.57 | 0.43 | 0.57 | 0.43 | 0.57 | tWCK(avg) | |
| Write Clock period jitter tJIT(per) | WCK period jitter tJIT(per) | -46 | 46 | -40 | 40 | -34 | 34 | -30 | 30 | ps | |
| Maximum Write Clock Jitter between consecutive cycles | tJIT(cc) | - | 92 | - | 80 | - | 68 | - | 60 | ps | |
| Cumulative error across 2 cycles | tERR(2per) | TBD | TBD | TBD | TBD | TBD | TBD | TBD | TBD | ps | |
| Cumulative error across 3 cycles | tERR(3per) | TBD | TBD | TBD | TBD | TBD | TBD | TBD | TBD | ps | |
| Cumulative error across 4 cycles | tERR(4per) | TBD | TBD | TBD | TBD | TBD | TBD | TBD | TBD | ps | |

**Table 425 — Write Clock AC Timings for 2400/2750/3000/3200MHz**

| Parameter | Symbol | 2400MHz | | 2750MHz | | 3000MHz | | 3200MHz | | Units | Notes |
|---|---|---|---|---|---|---|---|---|---|---|---|
| | | Min | Max | Min | Max | Min | Max | Min | Max | | |
| Write Clock Timing | | | | | | | | | | | |
| Average Write Clock period | tWCK(avg) | 0.417 | 50 | 0.364 | 50 | 0.334 | 50 | 0.313 | 50 | ns | |
| Average High pulse width | tWCKH(avg) | 0.46 | 0.54 | 0.46 | 0.54 | 0.46 | 0.54 | 0.46 | 0.54 | tWCK(avg) | |
| Average Low pulse width | tWCKL(avg) | 0.46 | 0.54 | 0.46 | 0.54 | 0.46 | 0.54 | 0.46 | 0.54 | tWCK(avg) | |
| Absolute Write Clock period | tWCK(abs) | tWCK(avg) MIN + tJIT(per) MIN | - | tWCK(avg) MIN + tJIT(per) MIN | - | tWCK(avg) MIN + tJIT(per) MIN | - | tWCK(avg) MIN + tJIT(per) MIN | - | ns | |
| Absolute High Write Clock pulse width | tWCKH(abs) | 0.43 | 0.57 | 0.43 | 0.57 | 0.43 | 0.57 | 0.43 | 0.57 | tWCK(avg) | |
| Absolute Low Write Clock pulse width | tWCKL(abs) | 0.43 | 0.57 | 0.43 | 0.57 | 0.43 | 0.57 | 0.43 | 0.57 | tWCK(avg) | |
| Write Clock period jitter tJIT(per) | WCK period jitter tJIT(per) | -28 | 28 | -26 | 26 | -24 | 24 | -22 | 22 | ps | |
| Maximum Write Clock Jitter between consecutive cycles | tJIT(cc) | - | 56 | - | 52 | - | 48 | - | 44 | ps | |
| Cumulative error across 2 cycles | tERR(2per) | TBD | TBD | TBD | TBD | TBD | TBD | TBD | TBD | ps | |
| Cumulative error across 3 cycles | tERR(3per) | TBD | TBD | TBD | TBD | TBD | TBD | TBD | TBD | ps | |
| Cumulative error across 4 cycles | tERR(4per) | TBD | TBD | TBD | TBD | TBD | TBD | TBD | TBD | ps | |

## 15.3 tWCK2DQ AC parameters

**Table 426 - tWCK2DQ AC parameters**

| Parameter | Symbol | Target | Min/Max | Units |
|---|---|---|---|---|
| DQ to WCK input offset | tWCK2DQI_HF | 300/700 | Min/Max | ps |
| | tWCK2DQI_LF | 300/900 | Min/Max | ps |
| WCK to DQ input offset temperature variation (Write) | tWCK2DQI_temp_HF | 0.6 | Max | ps/°C |
| | tWCK2DQI_temp_LF | 0.7 | Max | ps/°C |
| WCK to DQ input offset voltage variation (Write) | tWCK2DQI_volt_HF | 25 | Max | ps/50mV |
| | tWCK2DQI_volt_LF | 50 | Max | ps/50mV |
| Absolute High clock pulse width | tCH(abs) | 43/57 | Min/Max | tWCK(avg) |
| Absolute Low clock pulse width | tCL(abs) | 43/57 | Min/Max | tWCK(avg) |
| WCK to DQ output offset | tWCK2DQO_HF | 650/1600 | Min/Max | ps |
| | tWCK2DQO_LF | 650/1900 | Min/Max | ps |
| WCK to DQ output offset temperature variation (Read) | tWCK2DQO_temp_HF | 1.5 | Max | ps/°C |
| | tWCK2DQO_temp_LF | 1.8 | Max | ps/°C |
| WCK to DQ output offset voltage variation (Read) | tWCK2DQO_volt_HF | 3.0 | Max | ps/mV |
| | tWCK2DQO_volt_LF | 5.0 | Max | ps/mV |

NOTE 1 HF means high frequency and LF means low frequency.
NOTE 2 '_LF' is used up to 3200Mbps and '_HF' is used 3200Mbps and above.
NOTE 3 WCK2DQ AC parameters(HF/LF) can be selectable by MR18 OP[3].

## 15.4 DQ Tx Jitter Spec

The DRAM DQ to RDQS differential jitter is defined to support both SOC matched and unmatched DQ-RDQS input receiver (Rx) types over NUI of mismatch. All output timings are referenced to RDQS for source synchronous timing relationship. The appropriate RDQS preamble mode must be selected in order to support the unmatched SOC Rx. It is the responsibility of the SOC and system to insure the advanced RDQS preambles edges are robust for system operation.

The N-UI DQ to RDQS output timing is defined by tRDQS_NUI in conjunction with tQH and tDQSQ where NUI defines the number of UI RDQS is shifted from the corresponding DQ as shown in the figures below.

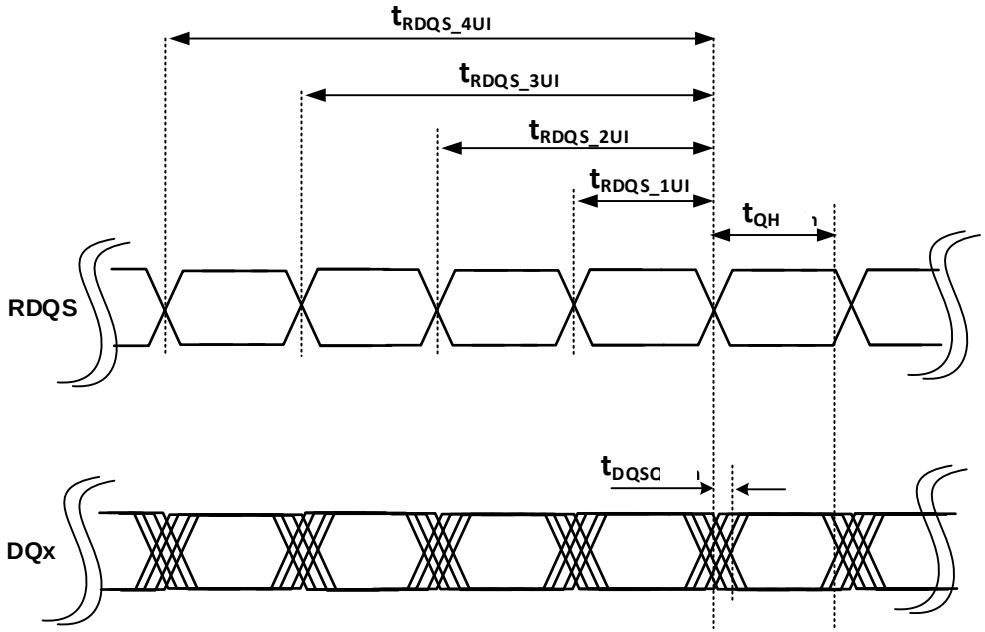


**Figure 263 - N-UI DQ to RDQS output timing definitions**

The effective eye width available at the DRAM per byte for an unmatched Rx will be tQH – tDQSQ – |tjitRDQS_NUI| where tjitRDQS_NUI = tRDQS_NUI – N*UI with N= 1,2,3,4 and UI is the unit interval.

The effective eye width available at the DRAM per pin will be tQW – |tjitRDQS_NUI| where tjitRDQS_NUI = tRDQS_NUI – N*UI with N= 1,2,3,4 and UI is the unit interval and tQW= tQH(pin) – tDQSQ(pin).

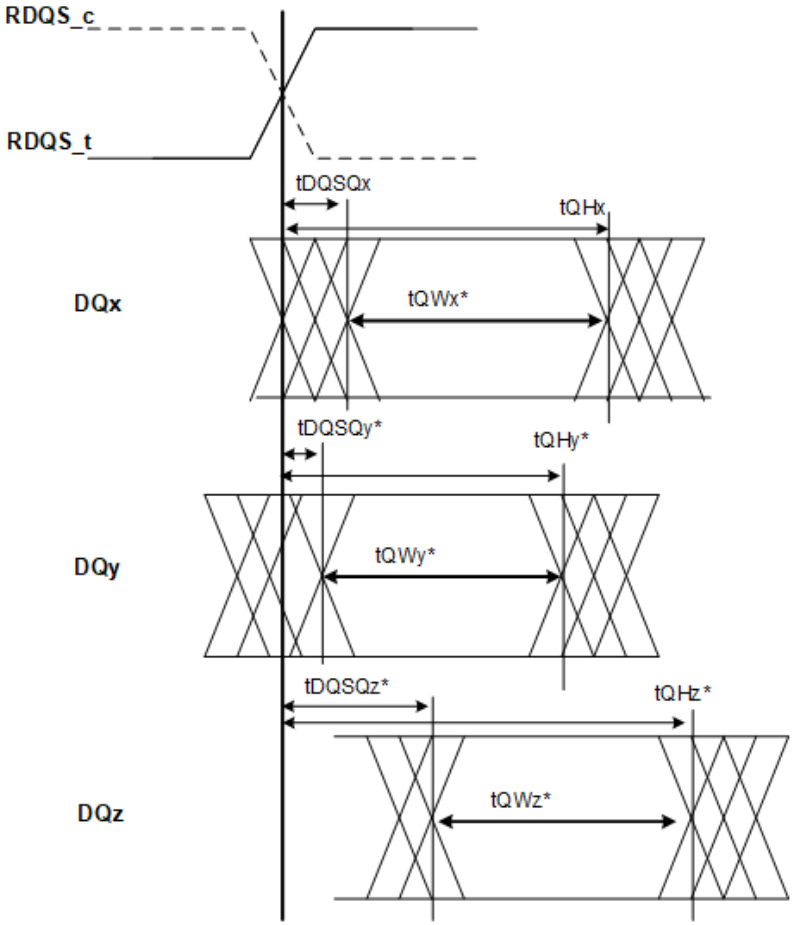


**Figure 264 - tQW example of eyewidth per pin and relationship of tDQSQ(pin) and tQH(pin) across byte group**

The figures below include examples of 0 and 3UI mismatch using the 4 twck RDQS read preamble of 2twck static + 2twck toggle.

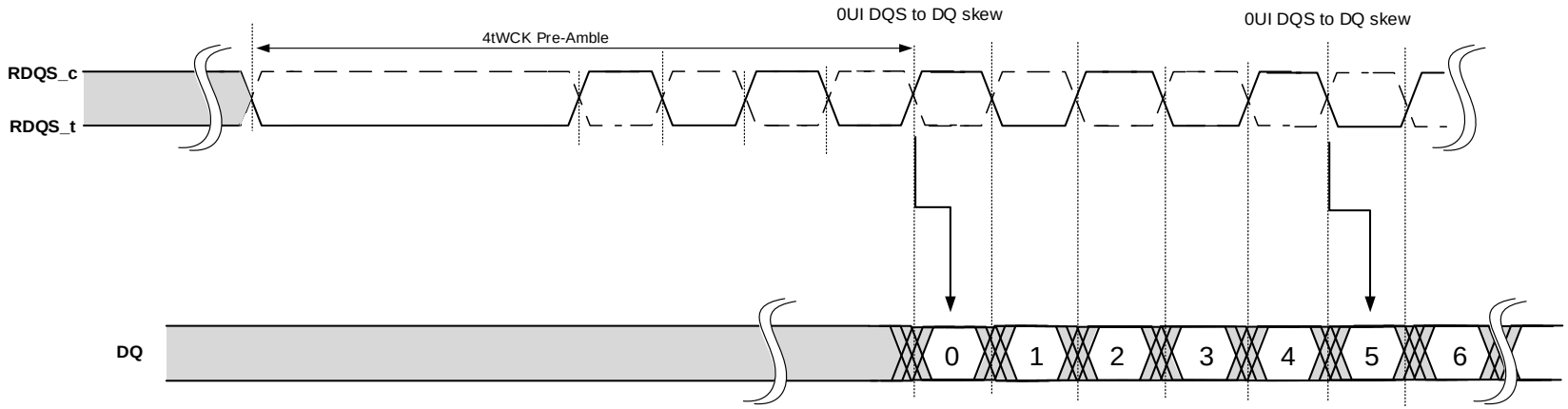


NOTE 1 It is the responsibility of the SOC and system to insure the advanced RDQS preambles edges are robust for system operation.

**Figure 265 - Read burst example for pin DQx depicting bits 0 and 5 relative to the RDQS edge for 0 UI mismatch**

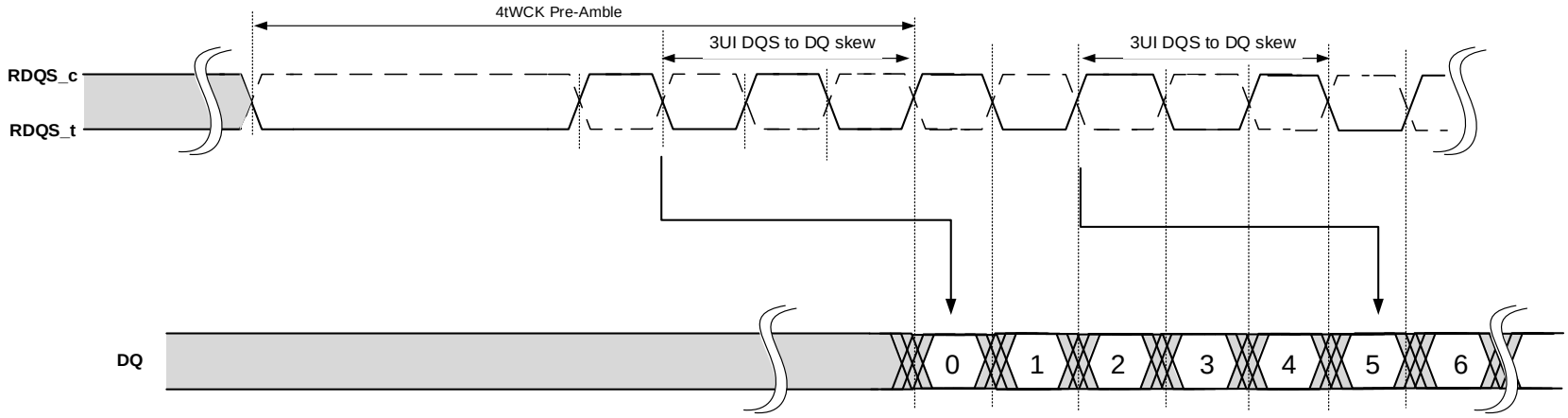


NOTE 1 It is the responsibility of the SOC and system to insure the advanced RDQS preambles edges are robust for system operation.

**Figure 266 - Read burst example for pin DQx depicting bits 0 and 5 relative to the RDQS edge for 3UI mismatch**

**Table 427 - DRAM DQ, DQS output timing**

| Symbol | Parameter | Data Rate | | | | Units | Notes |
|---|---|---|---|---|---|---|---|
| | | <3200 | | 3200/5500/6400 | | | |
| | | Min | Max | Min | Max | | |
| $t_{DQSQ}$ | RDQS_t,RDQS_c to DQ Skew per byte group | - | tbd | - | 0.26 | UI | 1,2,3,4,9,10 |
| $t_{QH}$ | RDQS_t,RDQS_c to DQ output hold time per byte group | tbd | - | 0.76 | - | UI | 1,2,3,4,9,10 |
| $t_{QW}$ | DQ eyewidth per pin | tbd | - | tWCKH/L(abs)MIN – 0.17 | - | UI | 1,2,3,4,5,6,9,10 |
| $t_{jitRDQS_1UI(avg)}$ | Average 1UI jitter of RDQS (Duty-Cycle jitter) | tbd | tbd | -0.017 | 0.017 | UI | 1,2,7,8,9,10 |
| $t_{jitRDQS_1UI(abs)}$ | Absolute 1UI jitter of RDQS | tbd | tbd | -0.039 | 0.039 | UI | 1,2,7,8,9,10 |
| $t_{jitRDQS_2UI(abs)}$ | Absolute 2UI jitter of RDQS | tbd | tbd | -0.03 | 0.03 | UI | 1,2,7,8,9,10 |
| $t_{jitRDQS_3UI(abs)}$ | Absolute 3UI jitter of RDQS | tbd | tbd | -0.056 | 0.056 | UI | 1,2,7,8,9,10 |
| $t_{jitRDQS_4UI(abs)}$ | Absolute 4UI jitter of RDQS | tbd | tbd | -0.036 | 0.036 | UI | 1,2,7,8,9,10 |
| $t_{jitRDQS_1UI}$ | Remainder of absolute 1UI jitter of RDQS with average 1UI jitter removed | tbd | tbd | -0.022 | 0.022 | UI | 1,2,7,8,9,10,11 |
| $t_{jitRDQS_3UI}$ | Remainder of absolute 3UI jitter of RDQS with average 1UI jitter removed | tbd | tbd | -0.039 | 0.039 | UI | 1,2,7,8,9,10,12 |

NOTE 1 These parameters are defined over voltage and temperature.
NOTE 2 This parameter value is defined after duty cycle adjustment is applied.
NOTE 3 These parameters are a function of WCK input clock jitter tWCKH and tWCKL. Note for tWCKL(abs)MIN of 0.43tck = 0.86 UI.
NOTE 4 These parameters are defined as min/max across all DQ pins per byte group. This includes the across pin variation within a byte group.
NOTE 5 These parameters are defined per DQ pin where tQW= tQH(pin) – tDQSQ(pin) for the eye width.
NOTE 6 Equation applies to tWCKH/L(abs) MIN = 0.43 … 0.46tCK. If tWCKH/L(abs) MIN >= 0.46tCK then tQW = 0.75UI
Example1: If tWCKH/L(abs) MIN is 0.43tWCK then tQW MIN = tWCKH/L(abs) MIN – 0.17 UI = 0.86 UI – 0.17UI = 0.69UI.
Example2: If tWCKH/L(abs) MIN is 0.46tWCK then tQW MIN = tWCKH/L(abs) MIN – 0.17 UI = 0.92 UI – 0.17UI = 0.75UI.
Example3: If tWCKH/L(abs) MIN is 0.48tWCK then tQW MIN = 0.75UI
NOTE 7 This parameter is defined as tjitRDQS_NUI = tRDQS_NUI – N*UI where N= 1,2,3,4 and UI is the unit interval. Example tjitRDQS_2UI= tRDQS_2UI – 2*UI.

NOTE 8 These parameters are a function of VDD2H Zmax. When VDD2H Zmax is below 10 mohms from 2-10MHz and 20 mohms at 20MHz the min and max spec values will reduce by 0.005UI.
a. Example: tjitRDQS_3UI(MIN) = -0.0385 and tjitRDQS_3UI(MAX) = 0.0385

NOTE 9 When operating in WCK low frequency mode (MR18 OP[3]=0B), <3200 data rate timing parameters are applied.

NOTE 10 When operating in WCK high frequency mode (MR18 OP[3]=1B), 3200/5500/6400 data rate timing parameters are applied.

NOTE 11 tjitRDQS_1UI MAX = tjitRDQS_1UI(abs) MAX - tjitRDQS_1UI(avg) MAX; tjitRDQS_1UI MIN = tjitRDQS_1UI(abs) MIN - tjitRDQS_1UI(avg) MIN

NOTE 12 tjitRDQS_3UI MAX = tjitRDQS_3UI(abs) MAX - tjitRDQS_1UI(avg) MAX; tjitRDQS_3UI MIN = tjitRDQS_3UI(abs) MIN - tjitRDQS_1UI(avg) MIN

## 15.5 CS Rx specification

LPDDR5 CS Rx is defined as two modes Asynchronous mode and Synchronous mode. Asynchronous mode Rx spec applies to during power down / deep sleep mode and exit from power down / deep sleep mode. Synchronous mode applies to other period than exit mode.

### 15.5.1 CS Rx mask and single pulse definition for Synchronous mode

LPDDR5 CS Rx mask for Synchronous mode is defined as hexagonal mask shape as shown in Figure 267. CS signals apply the same compliance mask and operate in single data rate mode. The receiver mask (Rx Mask) defines the area that the input signal must not encroach in order for the DRAM input receiver to be expected to be able to successfully capture a valid input signal.

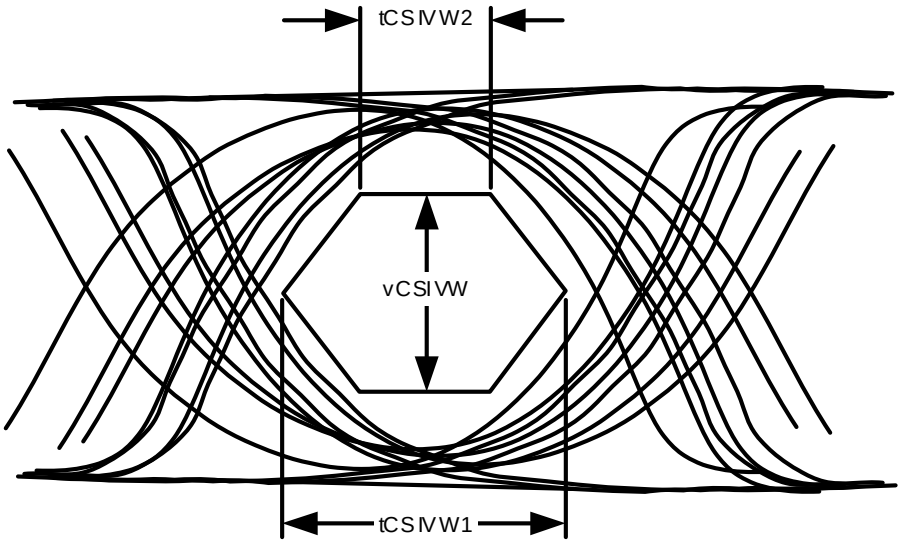


**Figure 267 Synchronous mode CS Rx Mask definition**

LPDDR5 CS Rx single pulse definition as shown in Figure 268.

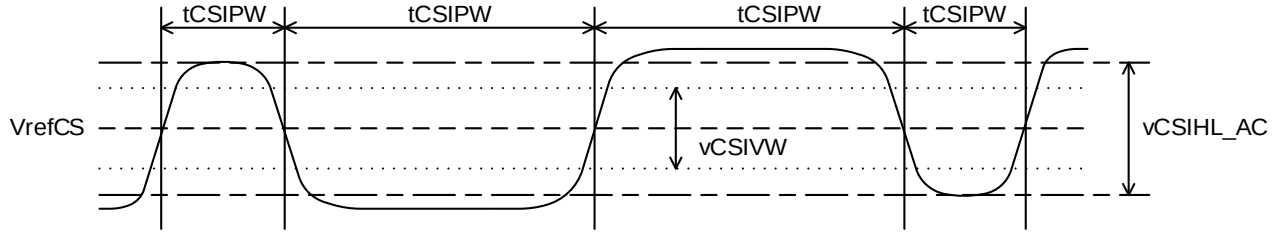


NOTE 1 Single pulse include any cycle of pulse

**Figure 268 Synchronous mode CS Rx single pulse definition**

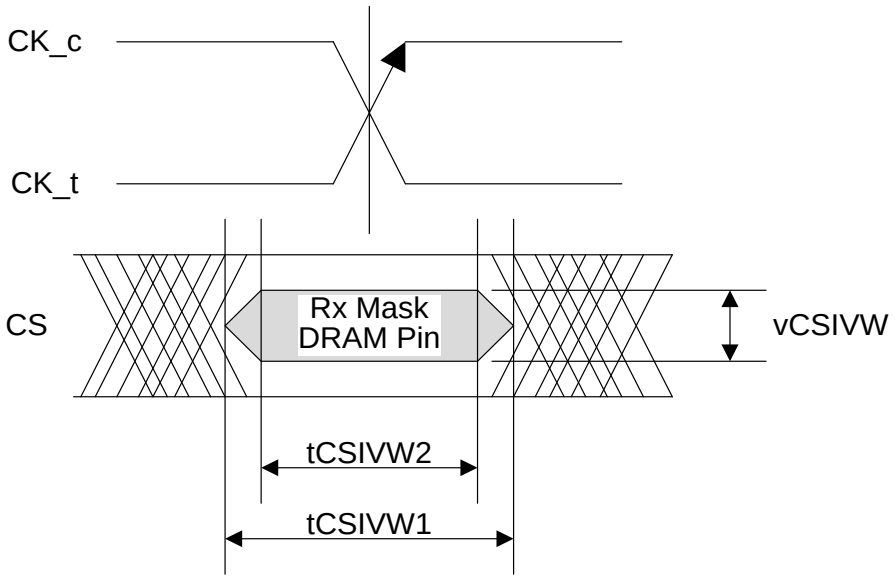


**Figure 269 Synchronous mode CS Timings at the DRAM Pin**

Timing terms in Figure 270 are measured from CK_t/CK_c (differential mode) / CK (single end mode) to the center (midpoint) of the tCSIVW1 and tCSIVW2 window taken at midpoint and vCSIVW voltage levels.

### 15.5.2 CS Rx input level definition for Asynchronous mode

LPDDR5 CS Rx spec for power down mode is defined as shown in Figure 270. CS has to be lower than ViLPD to stay in power down mode or deep sleep mode. To exit from power down or deep sleep mode, CS has to satisfy ViHPD and power down / deep sleep timing specifications.

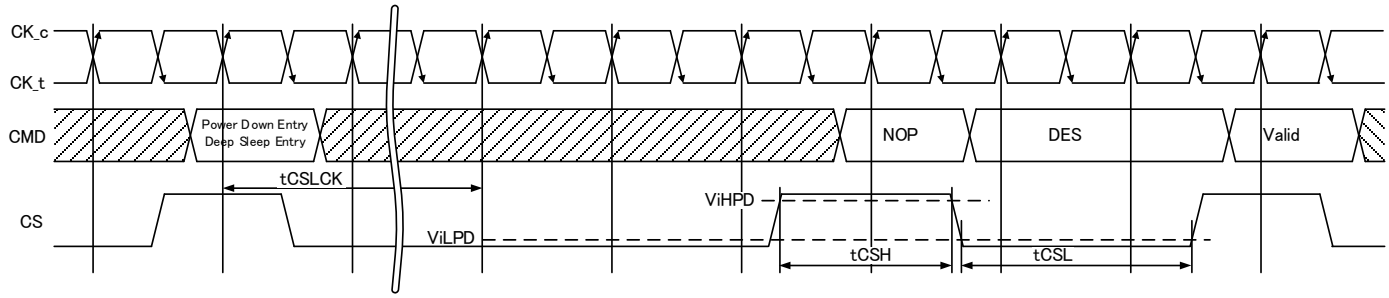


**Figure 270 Asynchronous mode ViHPD and ViLPD at Power Down Exit**

### 15.5.3 Synchronous mode CS Rx mask / single pulse spec and Asynchronous mode CS input spec.

**Table 428 CS Rx Specification**

| item | Symbol | Min/ Max | CK Frequency (MHz) | | | | | | | | | | | | Unit | Note |
|---|---|---|---|---|---|---|---|---|---|---|---|---|---|---|---|---|
| | | | 67[A] | 133 | 200 | 267 | 344 | 400 | 467 | 533 | 600 | 688 | 750 | 800 | | |
| Rx Mask | | | | | | | | | | | | | | | | |
| CS Rx mask width at VrefCS | tCSIVW1 | Min | 0.3 | | | | | | | | | | | | UI | 1 |
| CS Rx mask width at vCSIVW | tCSIVW2 | Min | 0.22 | | | | | | | | | | | | UI | 1 |
| CS Rx mask height | vCSIVW | Min | 180 | | | | | | | | | | | | mV | 2 |
| Rx Single pulse | | | | | | | | | | | | | | | | |
| CS Rx pulse width | tCSIPW | Min | 0.6 | | | | | | | | | | | | UI | |
| CS Rx pulse amplitude | vCSIHL_AC | Min | 240 | | | | | | | | | | | | mV | 3 |
| CS reference voltage | Vref_CS | | VDD2H/3 | | | | | | | | | | | | mV | |
| Power down | | | | | | | | | | | | | | | | |
| CS VIL during Power down / Deep Sleep | ViLPD | Max | 130 | | | | | | | | | | | | mV | 4 |
| CS VIH during Power down / Deep Sleep | ViHPD | Min | 550 | | | | | | | | | | | | mV | 5 |
| | | Max | VDD2H + 0.2 | | | | | | | | | | | | V | 5 |

NOTE A The Rx voltage and absolute timing requirements apply for all CS operating frequencies at or below 67 for all speed bins. For example, tCSIVW1 (ns) = 4.477ns at or below 67MHz CK frequencies.

NOTE 1 CS Rx mask voltage and timing parameters at the pin including temperature drift and voltage AC noise impact based on Z(f) specification at a fixed temperature on the package. The voltage supply noise must comply to the component Min-Max DC operating conditions.

NOTE 2 CS single pulse signal amplitude into the receiver has to meet or exceed vCSIHL AC at any point over the total UI. No timing requirement above level. vCSIIHL_AC is the peak to peak voltage centered around VrefCS such that vCSIHL_AC/2 min has to be met both above and below VrefCS.

NOTE 3 vCSIHL_AC does not have to be met when no transitions are occurring.

NOTE 4 The input voltage presented to the CS Rx pin during power down should be 0V nominally to minimize leakage current.

NOTE 5 ViHPD is applied only for Power Down and Deep Sleep exit.

## 15.6 CA Rx specification

### 15.6.1 CA Rx mask and single pulse definition

LPDDR5 CA Rx mask is defined as hexagonal mask shape as shown in Figure 271. All CA signals apply the same compliance mask and operate in double data rate mode.
The receiver mask (Rx Mask) defines the area that the input signal must not encroach in order for the DRAM input receiver to be expected to be able to successfully capture a valid input signal.

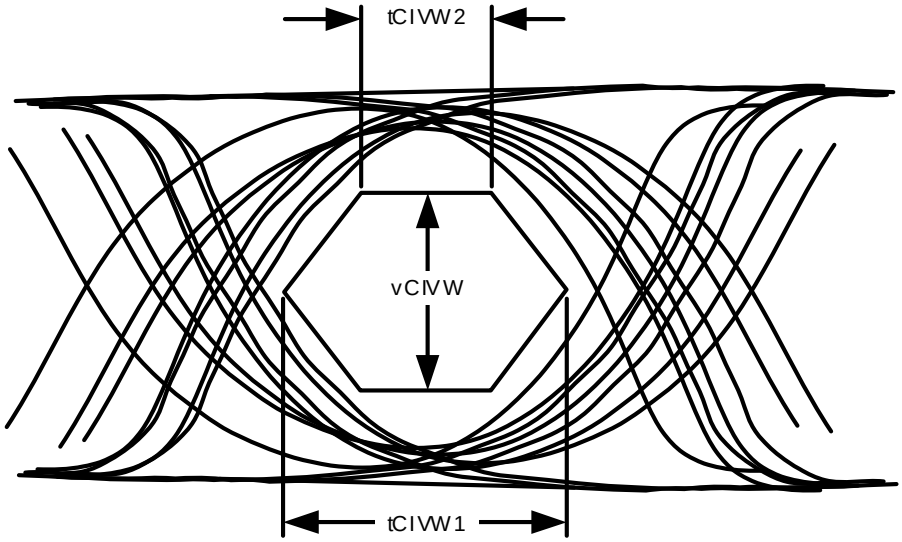


**Figure 271 CA Rx Mask definition**

LPDDR5 CA Rx single pulse definition as shown in Figure 272

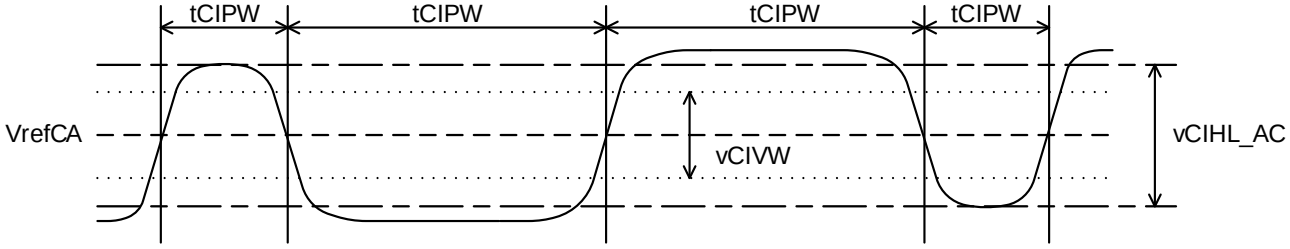


NOTE 1 Single pulse include any cycle of pulse.
NOTE 2 VrefCA is calculated value based on VDDQ and MR12.

**Figure 272 CA Rx single pulse definition**

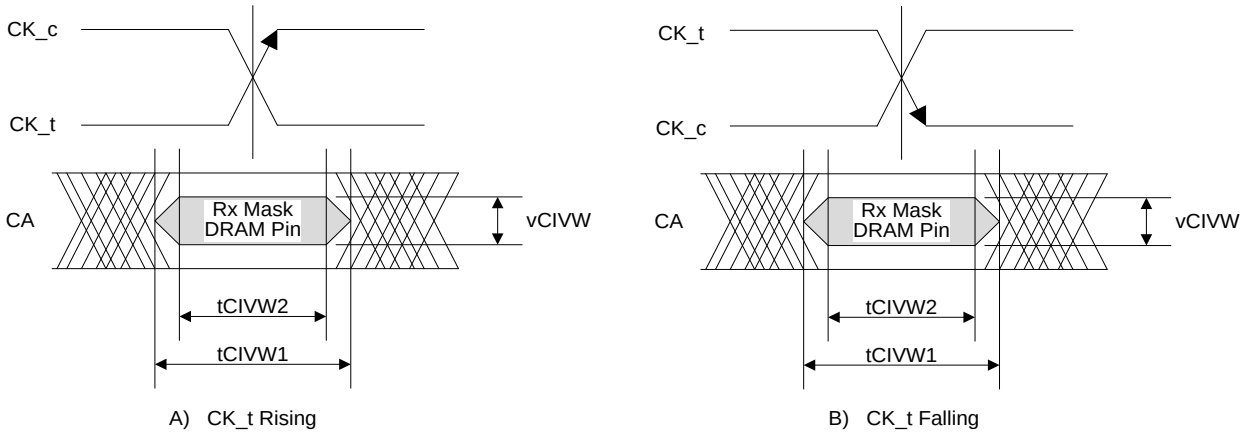


**Figure 273 CA timings at the DRAM Pins**

Minimum CA Eye should be VrefCA aligned.

Differential CK mode definition.

All of the timing terms in Figure 273 are measured from CK_t/CK_c (differential mode) / CK (single ended mode) to the center (midpoint) of the tCIVW1 and tCIVW2 window taken at the midpoint and vCIVW voltage level. CA Rx mask window center is around CK_t/CK_c cross point (differential mode) / CK (single ended mode).

Single Ended CK mode definition

TBD

### 15.6.2 CA Rx mask and single pulse specification

**Table 429 CA Rx Specification**

| Item | Symbol | Min/ Max | CK Frequency (MHz) | | | | | | | | | | | | Unit | Note |
|---|---|---|---|---|---|---|---|---|---|---|---|---|---|---|---|---|
| | | | 67[A] | 133 | 200 | 266 | 344 | 400 | 467 | 533 | 600 | 688 | 750 | 800 | | |
| Rx Mask | | | | | | | | | | | | | | | | |
| CA Rx mask width at TBD | tCIVW1 | Min | 0.3 | | | | | | | | | | | | UI | 1,2 |
| CA Rx mask width at vCIVW | tCIVW2 | Min | 0.18 | | | | | | | | | | | | UI | 1,2 |
| CA Rx mask height | vCIVW | Min | 155 | | | | | | | | | | | | mV | 3 |
| Rx Single pulse | | | | | | | | | | | | | | | | |
| CA Rx pulse width | tCIPW | Min | 0.6 | | | | | | | | | | | | UI | 4 |
| CA Rx pulse amplitude | vCIHL_AC | Min | 190 | | | | | | | | | | | | mV | 5 |
| CA Vref | | | | | | | | | | | | | | | | |
| CA Vref | VrefCA | Max | 350 | | | | | | | | | | | | mV | |
| | | Min | 75 | | | | | | | | | | | | mV | |
| CA mask offset | | | | | | | | | | | | | | | | |
| CA to CA offset | tCA2CA | Max | 100 | | | | | | | | | | | | ps | 6 |
| CA to CA offset shared CA | tCA2CA_ share | Max | 150 | | | | | | | | | | | | ps | 7 |

NOTE 1 CA Rx mask voltage and timing parameters at the pin including temperature drift and voltage AC noise impact based on Z(f) specification at a fixed temperature on the package. The voltage supply noise has to comply to the component Min-Max DC operating conditions.

NOTE 2 Rx mask voltage vCIVWl(max) has to be centered around VrefCA.

NOTE 3 CA single input pulse signal amplitude into the receiver has to meet or exceed vCIHL AC at any point over the total UI. No timing requirement above level. vCIIHL AC is the peak to peak voltage centered around VrefCA such that vCIHL_AC/2 min has to be met both above and below VrefCA.

NOTE 4 CA only minimum input pulse width defined at the VrefCA.

NOTE 5 vCIHL_AC does not have to be met when no transitions are occurring.

NOTE 6 tCA2CA is defined fastest CA[x] mask center to slowest CA[y] mask center.

NOTE 7 CA to CA offset parameter (tCA2CA_share) is defined between dies which are in the same PKG and share same power supplies.

NOTE A The Rx voltage and absolute timing requirements apply for all CA operating frequencies at or below 67 for all speed bins. For example tCIVW1 (ns) = 2.239ns at or below 67MHz CK frequencies.

### 15.6.3 tCA2CA_share definition

tCA2CA_share = max(CA2CA_share_R, CA2CA_share_F)

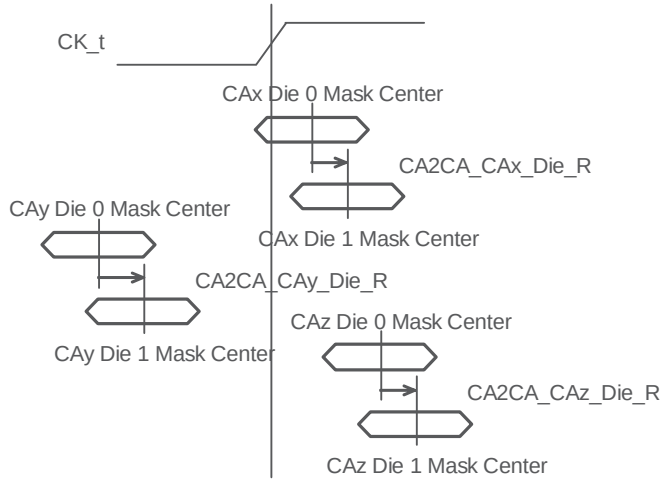


**Figure 274 - CK_t Rising Edge CA mask**

Definition of CA2CA_share_R

CA2CA_share_R = max(CA2CA_CAi_Die_R) if min(CA2CA_CAi_Die_R) ≥ 0

|max(CA2CA_CAi_Die_R)–min(CA2CA_CAi_Die_R)| if max(CA2CA_CAi_Die_R) ≥ 0 and min(CA2CA_CAi_Die_R) < 0

|min(CA2CA_CAi_Die_R)| if max(CA2CA_CAi_Die_R) < 0

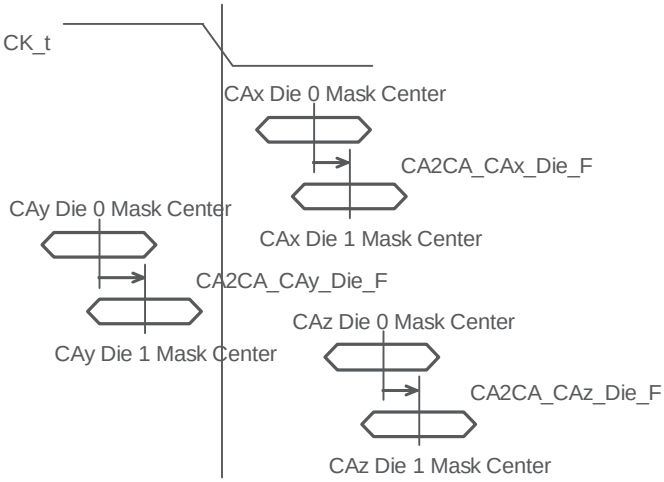


**Figure 275 - CK_t Falling Edge CA mask**

Definition of CA2CA_share_F

CA2CA_share_F = max(CA2CA_CAi_Die_F) if min(CA2CA_CAi_Die_F) ≥ 0

|max(CA2CA_CAi_Die_F)–min(CA2CA_CAi_Die_F)| if max(CA2CA_CAi_Die_F) ≥ 0 and min(CA2CA_CAi_Die_F) < 0

|min(CA2CA_CAi_Die_F)| if max(CA2CA_CAi_Die_F) < 0

## 15.7 DQ, DMI, Parity and DBI Rx specification

### 15.7.1 DQ, DMI, Parity and DBI Rx mask and single pulse definition

LPDDR5 DQ, DMI, Parity and DBI Rx mask is defined as hexagonal mask as shown in Figure 1. The mask (vDIVW, tDIVW1, tDIVW2) defines the area the input signal must not encroach in order for the DQ input receiver to successfully capture an input signal.

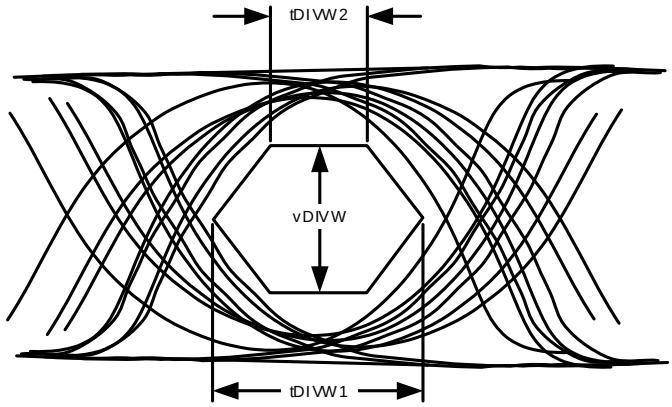


**Figure 276 - DQ, DMI, Parity and DBI Rx Mask definition**

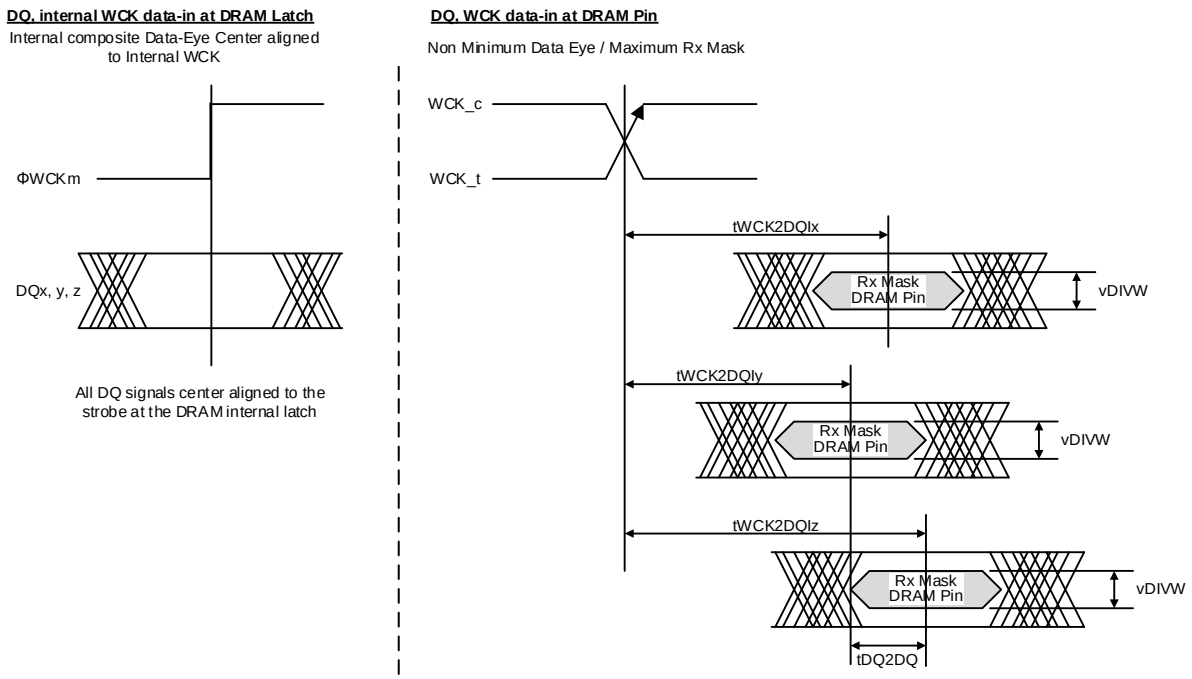


NOTE 1 tWCK2DQI is measured at the center (midpoint) of the tDIVW window.
NOTE 2 DQz represents the max tWCK2DQI in this example
NOTE 3 DQy represents the min tWCK2DQI in this example

**Figure 277 - DQ to WCK tWCK2DQI and tDQ2DQ Timings at the DRAM pins referenced from the internal latch**

LPDDR5 DQ, DMI, Parity and DBI Rx single pulse definition as shown in Figure 278.

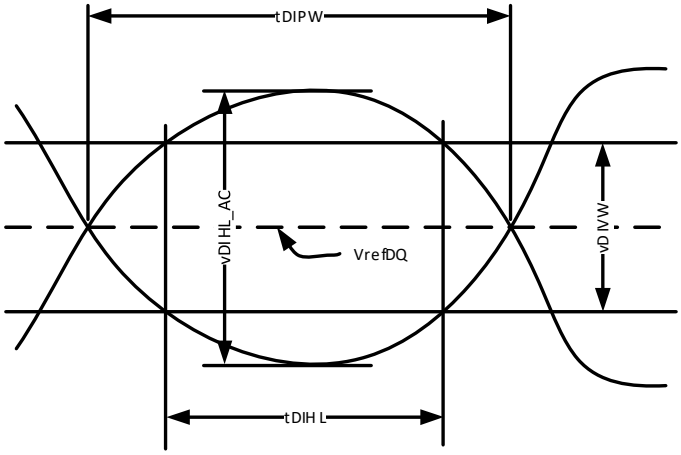


NOTE 1 Single pulse include any cycle of pulse
NOTE 2 Vref DQ is caluculated value based on VDDQ and MR14/MR15

**Figure 278 - DQ, DMI, Parity and DBI Rx single pulse definition**

**Table 430 - DQ, DMI, Parity and DBI Rx Specification**

| item | Symbol | Min/ Max | WCK Frequency (MHz) | | | | | | | | | | | Unit | Note |
|---|---|---|---|---|---|---|---|---|---|---|---|---|---|---|---|
| | | | 266[A] | 533 | 800 | 1067 | 1375 | 1600 | 1867 | 2134 | 2400 | 2750 | 3000 | 3200 | |
| Rx Mask | | | | | | | | | | | | | | | |
| DQ Rx mask width at TBD | tDIVW1 | Min | 0.35 | | | | | | | | | | | UI | 1 |
| DQ Rx mask width at vDIVW | tDIVW2 | Min | 0.18 | | | | | | | | | | | UI | 1 |
| DQ Rx mask height | vDIVW | Min | 140 | | | 120 | | | | 100 | | | | mV | 1,2 |
| Rx Single pulse | | | | | | | | | | | | | | | |
| DQ Rx pulse width | tDIPW | Min | 0.45 | | | | | | | | | | | UI | 4 |
| DQ Rx pulse width above/below vDIVW | tDIHL | Min | 0.25 | | | | | | | | | | | UI | 4 |
| DQ Rx pulse amplitude | vDIHL_AC | Min | 140 | | | | | | | | | | | mV | 3 |
| DQ Vref | | | | | | | | | | | | | | | |
| DQ Vref | VrefDQ | Max | 350 | | | | | | | 225 | | | | mV | |
| | | Min | 75 | | | | | | | | | | | mV | |

NOTE A The Rx voltage and absolute timing requirements apply for all DQ operating frequencies at or below 266MHz for all speed bins. For example tDIVW1 (ns) = 656.7ps at or below 266MHz WCK frequencies.

NOTE 1 Data Rx mask voltage and timing parameters are applied per pin and includes the DRAM DQ to WCK voltage AC noise impact based on Z(f) specification at a fixed temperature on the package. The voltage supply noise must comply to the component Min-Max DC operating conditions.

NOTE 2 Rx mask voltage vDIVW has to be centered around VrefDQ.

NOTE 3 DQ single input pulse amplitude into the receiver has to meet or exceed vDIHL_AC at any point over the total UI.
No timing requirement above level. vDIHL AC is the peak to peak voltage centered around VrefDQ such that vDIHL_AC/2 min has to be met both above and below VrefDQ.

NOTE 4 DQ only minimum input pulse width defined at the VrefDQ.

## 15.8 Pull Up/Pull Down Driver Characteristics and Calibration

All output pins (DQ, DMI, RDQS_t and RDQS_c) driver characteristics and calibration are defined following.

**Table 431 — Pull-down Driver Characteristics, with ZQ Calibration**

| $R_{ONPD}$,nom | Resistor | Min | Nom | Max | Unit |
|---|---|---|---|---|---|
| 40 Ohm | $R_{ON40PD}$ | 0.9 | 1 | 1.1 | RZQ/6 |
| 48 Ohm | $R_{ON48PD}$ | 0.9 | 1 | 1.1 | RZQ/5 |
| 60 Ohm | $R_{ON60PD}$ | 0.9 | 1 | 1.1 | RZQ/4 |
| 80 Ohm | $R_{ON80PD}$ | 0.9 | 1 | 1.1 | RZQ/3 |
| 120 Ohm | $R_{ON120PD}$ | 0.9 | 1 | 1.1 | RZQ/2 |
| 240 Ohm | $R_{ON240PD}$ | 0.9 | 1 | 1.1 | RZQ/1 |

NOTE 1 All value are after ZQ Calibration, see Table 433. Without ZQ Calibration $R_{ONPD}$ values are ± 30%.
NOTE 2 $R_{ONPD}$ limits are defined at same voltage and temperature as at the time ZQ calibration was done.

**Table 432 — Pull-Up Characteristics, with ZQ Calibration**

| $VOH_{PU}$,nom | VOH,nom(mV) | Min | Nom | Max | Unit |
|---|---|---|---|---|---|
| $V_{DDQ}$*0.5 | 250 | 0.9 | 1 | 1.1 | VOH,nom |

NOTE 1 All values are after ZQ Calibration. Without ZQ Calibration VOH(nom) values are ± 30%.
NOTE 2 VOH,nom (mV) values are based on a nominal VDDQ = 0.5V, VDD2H=1.05V.
NOTE 3 $VOH_{PU}$ limits are defined at same voltage and temperature as at the time ZQ calibration was done.
NOTE 4 $VOH_{PU}$ limits are defined for load termination matching the SOC ODT setting (in MR17 OP[2:0]) selected at the time ZQ calibration was done. If the selected SOC ODT setting MR17 OP[2:0]=$000_B$, then the $VOH_{PU}$ limits are not defined.
NOTE 5 $VOH_{PU}$ limits are defined as DC levels when all DQ drivers are driving high.
NOTE 6 Assumption of SOC ODT is typical for $VOH_{PU}$,nom definition.

**Table 433 — Valid Calibration Points**

| $VOH_{PU}$,nom | ODT Value | | | | | |
|---|---|---|---|---|---|---|
| | 240 | 120 | 80 | 60 | 48 | 40 |
| $V_{DDQ}$*0.5 | VALID | VALID | VALID | VALID | VALID | VALID |

NOTE 1 Once the output is calibrated for a given VOH(nom) calibration point, the ODT value may be changed without recalibration.

**Table 434 — Un-terminated Pull Up Characteristics**

| $R_{ONUNPU}$,nom | Resistor | Min | Nom | Max | Unit |
|---|---|---|---|---|---|
| 40 Ohm | $R_{ON40UNPU}$ | 0.7 | 1 | 1.3 | RZQ/6 |
| 48 Ohm | $R_{ON48UNPU}$ | 0.7 | 1 | 1.3 | RZQ/5 |
| 60 Ohm | $R_{ON60UNPU}$ | 0.7 | 1 | 1.3 | RZQ/4 |
| 80 Ohm | $R_{ON80UNPU}$ | 0.7 | 1 | 1.3 | RZQ/3 |
| 120 Ohm | $R_{ON120UNPU}$ | 0.7 | 1 | 1.3 | RZQ/2 |
| 240 Ohm | $R_{ON240UNPU}$ | 0.7 | 1 | 1.3 | RZQ/1 |

NOTE $R_{ONUNPU}$ is defined at VOH = VDDQ/2.

## 15.9 Output Driver and Termination Resistance Temperature and Voltage Sensitivity

If temperature and/or voltage change after calibration, the tolerance limits widen according to the Tables shown below.

**Table 435 Worst Case Output Driver and Termination Resistance**

| Resistor | Definition Point | Min | Max | Unit | Notes |
|---|---|---|---|---|---|
| $R_{ON}PD$ | 0.5 x VDDQ | RonPD(nom) x(0.90-($dR_{on}dT(max) \times \lvert\Delta T\rvert$) -($dR_{on}(max)dV2 \times \lvert\Delta V2\rvert$) -($dR_{on}(max)dVQ \times \lvert\Delta VQ\rvert$)) | RonPD(nom)x(1.10+($dR_{on}(max)dT \times \lvert\Delta T\rvert$) +($dR_{on}(max)dV2 \times \lvert\Delta V2\rvert$) +($dR_{on}(max)dVQ \times \lvert\Delta VQ\rvert$)) | ohm | 1,2,3 |
| $R_{TT}$ | 0.5 x VDDQ | $R_{TT}$ (nom) x(0.90-($dR_{on}(max)dT \times \lvert\Delta T\rvert$) -($dR_{on}(max)dV2 \times \lvert\Delta V2\rvert$) -($dR_{on}(max)dVQ \times \lvert\Delta VQ\rvert$)) | $R_{TT}$ (nom) x(1.10+($dR_{on}(max)dT \times \lvert\Delta T\rvert$) +($dR_{on}(max)dV2 \times \lvert\Delta V2\rvert$) +($dR_{on}(max)dVQ \times \lvert\Delta VQ\rvert$)) | ohm | 1,2,3 |
| $R_{ON}UNPU$ | 0.5 x VDDQ | RonUNPU (nom) x(0.70-($dR_{on}UNdT(max) \times \lvert\Delta T\rvert$) -($dR_{on}$(max) UNdV2 $\times \lvert\Delta V2\rvert$) -($dR_{on}$(max) UNdVQ $\times \lvert\Delta VQ\rvert$)) | RonUNPU (nom)x(1.30+($dR_{on}$(max) UNdT $\times \lvert\Delta T\rvert$) +($dR_{on}$(max) UNdV2 $\times \lvert\Delta V2\rvert$) +($dR_{on}$(max) UNdVQ $\times \lvert\Delta VQ\rvert$)) | ohm | 2,3 |
| $R_{TT}CS$ | 0.5 x VDDQ | $R_{TT}CS$ (nom) x(0.90-($dR_{on}(max)dT \times \lvert\Delta T\rvert$) -($dR_{on}(max)dV2 \times \lvert\Delta V2\rvert$) -($dR_{on}(max)dVQ \times \lvert\Delta V2\rvert$)) | $R_{TT}$ CS (nom) x(1.10+($dR_{on}(max)dT \times \lvert\Delta T\rvert$) +($dR_{on}(max)dV2 \times \lvert\Delta V2\rvert$) +($dR_{on}(max)dVQ \times \lvert\Delta V2\rvert$)) | ohm | 1,2,3 |

NOTE 1 ΔT = T - T(@ Calibration), ΔV2 = VDD2H – VDD2H(@ Calibration), ΔVQ = VDDQ – VDDQ(@ Calibration)

NOTE 2 $dR_{ON}dT$, $dR_{ON}dV2$, $dR_{ON}dVQ$, $dR_{TT}dV2$, $dR_{TT}dVQ$, $dR_{TT}dT$, $dR_{ON}UNdT$, $dR_{ON}UNdV2$ and $dR_{ON}UNdVQ$, are not subject to production test but are verified by design and characterization.

NOTE 3 VDD1, VDD2H, VDD2HQ and VDDQ must be nominal during measurement.

**Table 436 Worst Case Output high voltage**

| Voltage | Min | Max | Unit | Notes |
|---|---|---|---|---|
| $VOH_{PU}$ | $VOH_{PU}$ (nom) x(0.90-(dVOH(max)dT x $\lvert\Delta T\rvert$)-(dVOH(max)dV2 x$\lvert\Delta V2\rvert$)-(dVOH(max)dVQ x$\lvert\Delta VQ\rvert$)) | $VOH_{PU}$ (nom) x(1.10+(dVOH(max)dT x $\lvert\Delta T\rvert$)+(dVOH(max)dV2 x$\lvert\Delta V2\rvert$)+(dVOH(max)dVQ x$\lvert\Delta VQ\rvert$)) | V | 1,2,3,4 |

NOTE 1 ΔT = T - T(@ Calibration), ΔV2 = VDD2H – VDD2H(@ Calibration), ΔVQ = VDDQ – VDDQ(@ Calibration)

NOTE 2 dVOHdT, dVOHdV2 and dVOHdVQ are not subject to production test but are verified by design and characterization.

NOTE 3 Refer to Section 15.8 Pull Up/Pull Down Driver Characteristics for VOHPU.

NOTE 4 VDD1, VDD2H, VDD2HQ and VDDQ must be nominal during measurement.

**Table 437 Output Driver and Termination Resistance Temperature and Voltage Sensitivity**

| Symbol | Parameter | Min | Max | Unit |
|---|---|---|---|---|
| $dR_{ON}dT$ | $R_{ON}$ Temperature Sensitivity | 0.00 | 0.75 | %/°C |
| $dR_{ON}dV2$ | $R_{ON}$ VDD2H Voltage Sensitivity | 0.00 | 0.50 | %/mV |
| $dR_{ON}dVQ$ | $R_{ON}$ VDDQ Voltage Sensitivity | 0.00 | 0.20 | %/mV |
| dVOHdT | VOH Temperature Sensitivity | 0.00 | 0.75 | %/°C |
| dVOHdV2 | VOH VDD2H Voltage Sensitivity | 0.00 | 0.35 | %/mV |
| dVOHdVQ | VOH VDDQ Voltage Sensitivity | 0.00 | 0.35 | %/mV |
| $dR_{TT}dT$ | $R_{TT}$ Temperature Sensitivity | 0.00 | 0.75 | %/°C |
| $dR_{TT}dV2$ | $R_{TT}$ VDD2H Voltage Sensitivity | 0.00 | 0.50 | %/mV |
| $dR_{TT}dVQ$ | $R_{TT}$ VDDQ Voltage Sensitivity | 0.00 | 0.20 | %/mV |
| dRONUNdT | Un-terminated RON Temperature Sensitivity | 0.00 | 0.75 | %/°C |
| dRONUNdV2 | Un-terminated RON VDD2H Voltage Sensitivity | 0.00 | 0.75 | %/mV |
| dRONUNdVQ | Un-terminated RON VDDQ Voltage Sensitivity | 0.00 | 0.75 | %/mV |

# 16 Die configuration, Package ballout & Pin Definition

## 16.1 Package Configuration

### 16.1.1 Package Considerations for Byte-Mode Devices

Two Byte-Mode LPDDR5 SDRAMs can be logically combined into a Standard LPDDR5 SDRAM. Byte mode devices use the same bank architecture with one row address added and the page size reduced by half compared to a standard device of the same density. Two byte-mode die of the same density can be combined to make an equivalent x16 device of twice the given density. The inputs are ganged and the DQ busses from the two devices are assigned individually to the 16-bit channels.

Packages for Standard and Byte-Mode devices share the same ballmaps. This section describes internal wiring changes and system considerations when using packages containing Byte-Mode devices.

Three different die combinations are supported:

1) Standard - Packages configured with only Standard LPDDR5 die.
2) Byte-Mode - Packages configured with only Byte-Mode LPDDR5 die.
3) Mixed - Packages configured with both Standard and Byte-Mode LPDDR5 die. In this mixed configuration, some ranks contain only Standard die and other ranks contain only Byte-Mode die.

For mixed packages, standard devices shall be assigned to the lower numbered ranks and byte-mode devices shall be assigned to the higher numbered ranks.

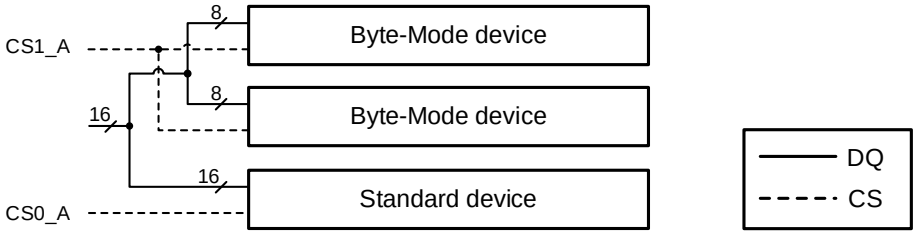


**Figure 279 — Example of rank assignment for a single-channel dual-rank package**

Packaged devices support only one set of latency parameters depending on the die combination:

1) Standard packages – configured with only Standard LPDDR5 dies – support standard LPDDR5 latency parameters.
2) Byte-Mode packages – configured with only Byte-Mode LPDDR5 dies – support byte-mode latency parameters.
3) Mixed packages – configured with both Standard and Byte-Mode LPDDR5 dies – support byte-mode latency parameters

MR0 OP[1] for each die indicates the appropriate timing support.

## 16.2 Pad Order

**Table 438 — LPDDR5 Pad order**

| TOP | | | | | |
|---|---|---|---|---|---|
| Pad number | Pad Name | Pad number | Pad Name | Pad number | Pad Name |
| 1 | VDD2H | 36 | VDD2H | 60 | VSS |
| 2 | VSS | 37 | RESET_n | 61 | DQ7 |
| 3 | VDD1 | 38 | VDD2L | 62 | VDDQ |
| 4 | VDD2H | 39 | VSS | 63 | DQ6 |
| 5 | VDD2L | 40 | CA6 | 64 | VSS |
| 6 | VSS | 41 | CA5 | 65 | DQ5 |
| 7 | VDD2H | 42 | VDD2H | 66 | VDDQ |
| 8 | VSS | 43 | CA4 | 67 | DQ4 |
| 9 | DQ8 | 44 | CA3 | 68 | VSS |
| 10 | VDDQ | 45 | VSS | 69 | DMI0 |
| 11 | DQ9 | 46 | CK_c | 70 | VDDQ |
| 12 | VSS | 47 | CK_t | 71 | VDD2L |
| 13 | DQ10 | 48 | VDD2H | 72 | VSS |
| 14 | VDDQ | 49 | CS | 73 | WCK0_t |
| 15 | DQ11 | 50 | CA2 | 74 | WCK0_c |
| 16 | VSS | 51 | VSS | 75 | VDD2H |
| 17 | RDQS1_t | 52 | CA1 | 76 | VDDQ |
| 18 | RDQS1_c | 53 | CA0 | 77 | RDQS0_c |
| 19 | VDDQ | 54 | VDD2H | 78 | RDQS0_t |
| 20 | VDD2H | 55 | VDD2L | 79 | VSS |
| 21 | WCK1_c | 56 | VSS | 80 | DQ3 |
| 22 | WCK1_t | 57 | ZQ | 81 | VDDQ |
| 23 | VSS | 58 | VDDQ | 82 | DQ2 |
| 24 | VDD2L | 59 | VDD2H | 83 | VSS |
| 25 | VDDQ | | | 84 | DQ1 |
| 26 | DMI1 | | | 85 | VDDQ |
| 27 | VSS | | | 86 | DQ0 |
| 28 | DQ12 | | | 87 | VSS |
| 29 | VDDQ | | | 88 | VDD2H |
| 30 | DQ13 | | | 89 | VSS |
| 31 | VSS | | | 90 | VDD2L |
| 32 | DQ14 | | | 91 | VDD2H |
| 33 | VDDQ | | | 92 | VDD1 |
| 34 | DQ15 | | | 93 | VSS |
| 35 | VSS | | | 94 | VDD2H |
| | | | | Bottom | |

NOTE 1 Additional pads are allowed for DRAM mfg-specific pads ("DNU"), or additional power pads as long as the extra pads are grouped with like-named pads.

NOTE 2 Applications are recommended to follow bit/byte assignments. Bit or Byte swapping at the application level requires review of MR and calibration features assigned to specific data bits/bytes.

## 16.3 Package Ballout

### 16.3.1 315-ball 1CHx16 Discrete Package, 0.80mm x 0.70mm using MO-338A

| | 1 | 2 | 3 | 4 | 5 | 6 | 7 | 8 | 9 | 10 | 11 | 12 | 13 | 14 | 15 |
|---|---|---|---|---|---|---|---|---|---|---|---|---|---|---|---|
| A | NC | NC | VDDQ | DMI0_A | VSS | VDD2L | VDD2H | VDD2H | VDD2H | VDD2L | VSS | DMI1_A | VDDQ | NC | NC |
| B | NC | VDDQ | RDQS0_T_A | VSS | DQ4_A | VDD2L | VDD2H | VSS | VDD2H | VDD2L | DQ12_A | VSS | RDQS1_T_A | VDDQ | NC |
| C | VDD1 | DQ1_A | VDDQ | RDQS0_C_A | VSS | DQ5_A | VDD2H | VSS | VDD2H | DQ13_A | VSS | RDQS1_C_A | VDDQ | DQ9_A | VDD1 |
| D | DQ0_A | VSS | DQ3_A | VDDQ | WCK0_C_A | VSS | VSS | VDD2H | VSS | VSS | WCK1_C_A | VDDQ | DQ11_A | VSS | DQ8_A |
| E | VSS | DQ2_A | VSS | WCK0_T_A | VDDQ | DQ6_A | VDD2H | VSS | VDD2H | DQ14_A | VDDQ | WCK1_T_A | VSS | DQ10_A | VSS |
| F | VDDQ | VSS | VDDQ | VDDQ | DQ7_A | VDD2H | VDD2H | VSS | VDD2H | VDD2H | DQ15_A | VDDQ | VDDQ | VSS | VDDQ |
| G | VDDQ | VDDQ | VSS | CA0_A | VSS | CS1_A | VSS | CA2_A | VSS | CA4_A | VSS | CA6_A | VSS | VDDQ | VDDQ |
| H | Reset_N | VDD2L | VSS | VSS | CA1_A | VSS | CS0_A | VSS | CK_t_A | VSS | CA3_A | VSS | CA5_A | VDD2L | ZQ_A |
| J | VSS | VDD2L | VSS | RFU | VDD2H | RFU | VSS | VSS | CK_c_A | VSS | VDD2H | VSS | VSS | VDD2L | VSS |
| K | VDD2H | VDD2H | VDD2H | VDD2H | VDD2H | VDD2H | VSS | VSS | VSS | VDD2H | VDD2H | VDD2H | VDD2H | VDD2H | VDD2H |
| L | VSS | VSS | VSS | VSS | VSS | VDD2H | VDD2H | VDD2H | VDD2H | VDD2H | VSS | VSS | VSS | VSS | VSS |
| M | VDD2H | VDD2H | VDD2H | VDD2H | VDD2H | VDD2H | VSS | VSS | VSS | VDD2H | VDD2H | VDD2H | VDD2H | VDD2H | VDD2H |
| N | VSS | VDD2L | VSS | VSS | VDD2H | VSS | NC | VSS | VSS | VSS | VDD2H | VSS | VSS | VDD2L | VSS |
| P | NC | VDD2L | NC | VSS | NC | VSS | NC | VSS | NC | VSS | NC | VSS | VSS | VDD2L | NC |
| R | VDDQ | VDDQ | VSS | NC | VSS | NC | VSS | NC | VSS | NC | VSS | NC | VSS | VDDQ | VDDQ |
| T | VDDQ | VSS | VDDQ | VDDQ | NC | VDD2H | VDD2H | VSS | VDD2H | VDD2H | NC | VDDQ | VDDQ | VSS | VDDQ |
| V | VSS | NC | VSS | NC | VDDQ | NC | VDD2H | VSS | VDD2H | NC | VDDQ | NC | VSS | NC | VSS |
| W | NC | VSS | NC | VDDQ | NC | VSS | VSS | VDD2H | VSS | VSS | NC | VDDQ | NC | VSS | NC |
| Y | VDD1 | NC | VDDQ | NC | VSS | NC | VDD2H | VSS | VDD2H | NC | VSS | NC | VDDQ | NC | VDD1 |
| AA | NC | VDDQ | NC | VSS | NC | VDD2L | VDD2H | VSS | VDD2H | VDD2L | NC | VSS | NC | VDDQ | NC |
| AB | NC | NC | VDDQ | NC | VSS | VDD2L | VDD2H | VDD2H | VDD2H | VDD2L | VSS | NC | VDDQ | NC | NC |

NOTE 1 0.8mm pitch (X-axis) 15 columns, 0.7mm pitch (Y-axis), 21 rows.
NOTE 2 Top View, A1 in top left corner.
NOTE 3 ZQ_A ball supports Channel A.
NOTE 4 ZQ Master Die for ZQ_A shall be assigned to Rank 0 of Channel A die. If this rank is composed of byte-mode dice, the lower die shall be the master die.

### 16.3.2 315-ball 2CHx32 Discrete Package, 0.80mm x 0.70mm using MO- 338A

| | 1 | 2 | 3 | 4 | 5 | 6 | 7 | 8 | 9 | 10 | 11 | 12 | 13 | 14 | 15 |
|---|---|---|---|---|---|---|---|---|---|---|---|---|---|---|---|
| A | NC | NC | VDDQ | DMI0_A | VSS | VDD2L | VDD2H | VDD2H | VDD2H | VDD2L | VSS | DMI1_A | VDDQ | NC | NC |
| B | NC | VDDQ | RDQS0_T_A | VSS | DQ4_A | VDD2L | VDD2H | VSS | VDD2H | VDD2L | DQ12_A | VSS | RDQS1_T_A | VDDQ | NC |
| C | VDD1 | DQ1_A | VDDQ | RDQS0_C_A | VSS | DQ5_A | VDD2H | VSS | VDD2H | DQ13_A | VSS | RDQS1_C_A | VDDQ | DQ9_A | VDD1 |
| D | DQ0_A | VSS | DQ3_A | VDDQ | WCK0_C_A | VSS | VSS | VDD2H | VSS | VSS | WCK1_C_A | VDDQ | DQ11_A | VSS | DQ8_A |
| E | VSS | DQ2_A | VSS | WCK0_T_A | VDDQ | DQ6_A | VDD2H | VSS | VDD2H | DQ14_A | VDDQ | WCK1_T_A | VSS | DQ10_A | VSS |
| F | VDDQ | VSS | VDDQ | VDDQ | DQ7_A | VDD2H | VDD2H | VSS | VDD2H | VDD2H | DQ15_A | VDDQ | VDDQ | VSS | VDDQ |
| G | VDDQ | VDDQ | VSS | CA0_A | VSS | CS1_A | VSS | CA2_A | VSS | CA4_A | VSS | CA6_A | VSS | VDDQ | VDDQ |
| H | Reset_N | VDD2L | VSS | VSS | CA1_A | VSS | CS0_A | VSS | CK_t_A | VSS | CA3_A | VSS | CA5_A | VDD2L | ZQ_A |
| J | VSS | VDD2L | VSS | RFU | VDD2H | RFU | VSS | VSS | CK_c_A | VSS | VDD2H | VSS | VSS | VDD2L | VSS |
| K | VDD2H | VDD2H | VDD2H | VDD2H | VDD2H | VDD2H | VSS | VSS | VSS | VDD2H | VDD2H | VDD2H | VDD2H | VDD2H | VDD2H |
| L | VSS | VSS | VSS | VSS | VSS | VDD2H | VDD2H | VDD2H | VDD2H | VDD2H | VSS | VSS | VSS | VSS | VSS |
| M | VDD2H | VDD2H | VDD2H | VDD2H | VDD2H | VDD2H | VSS | VSS | VSS | VDD2H | VDD2H | VDD2H | VDD2H | VDD2H | VDD2H |
| N | VSS | VDD2L | VSS | VSS | VDD2H | VSS | CK_c_B | VSS | VSS | VSS | VDD2H | VSS | VSS | VDD2L | VSS |
| P | RFU | VDD2L | CA5_B | VSS | CA3_B | VSS | CK_t_B | VSS | CS0_B | VSS | CA1_B | VSS | VSS | VDD2L | RFU |
| R | VDDQ | VDDQ | VSS | CA6_B | VSS | CA4_B | VSS | CA2_B | VSS | CS1_B | VSS | CA0_B | VSS | VDDQ | VDDQ |
| T | VDDQ | VSS | VDDQ | VDDQ | DQ15_B | VDD2H | VDD2H | VSS | VDD2H | VDD2H | DQ7_B | VDDQ | VDDQ | VSS | VDDQ |
| V | VSS | DQ10_B | VSS | WCK1_t_B | VDDQ | DQ14_B | VDD2H | VSS | VDD2H | DQ6_B | VDDQ | WCK0_T_B | VSS | DQ2_B | VSS |
| W | DQ8_B | VSS | DQ11_B | VDDQ | WCK1_c_B | VSS | VSS | VDD2H | VSS | VSS | WCK0_C_B | VDDQ | DQ3_B | VSS | DQ0_B |
| Y | VDD1 | DQ9_B | VDDQ | RDQS1_C_B | VSS | DQ13_B | VDD2H | VSS | VDD2H | DQ5_B | VSS | RDQS0_C_B | VDDQ | DQ1_B | VDD1 |
| AA | NC | VDDQ | RDQS1_T_B | VSS | DQ12_B | VDD2L | VDD2H | VSS | VDD2H | VDD2L | DQ4_B | VSS | RDQS0_T_B | VDDQ | NC |
| AB | NC | NC | VDDQ | DMI1_B | VSS | VDD2L | VDD2H | VDD2H | VDD2H | VDD2L | VSS | DMI0_B | VDDQ | NC | NC |

NOTE 1 0.8mm pitch (X-axis) 15 columns, 0.7mm pitch (Y-axis), 21 rows.
NOTE 2 Top View, A1 in top left corner.

## 16.4 Package Die Layout

Ballmaps for LPDDR5 dual-channel packages shall follow the pad order based on the second die placement (Channel B) being rotated with respect to the first die (Channel A) placement.

Ballmaps for LPDDR5 quad-channel packages shall follow the pad order based on:

1. The Channel B die placement being rotated with respect to the Channel A die placement.
2. The Channel D die placement being rotated with respect to the Channel C die placement.

BELOW IS FOR REFERENCE ONLY:
LPDDR5 is based on a single channel (x16) die concept. In contrast, LPDDR4 is based on a dual channel die concept with the pad order of the second channel being mirrored with respect to the first channel.

Examples of dual channel mirror die (LPDDR4) and single channel die (LPDDR5) package layout are shown below. LPDDR5 pad ordering has not been balloted and is shown for illustrative purposes only.

**Table 439 – Package configuration example**

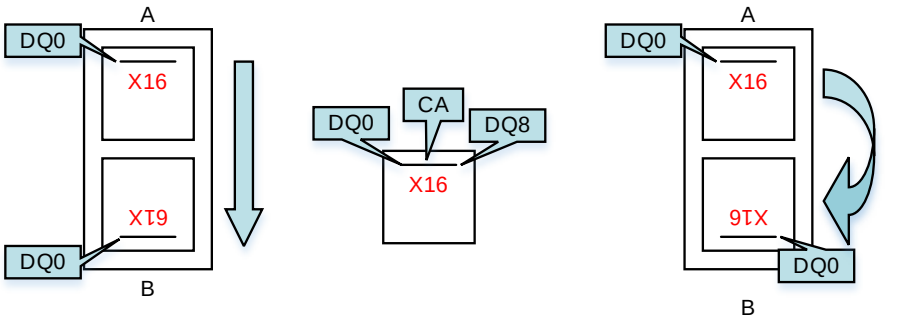


| LPDDR4 Dual Channel Mirror Die | LPDDR5 single Channel die | Example of placing 1 Ch. die in 2 Ch. configuration |
|---|---|---|
| • Ch. B is folded down from Ch. A. | • Pad order approach likely similar to LPDDR4 | • Ch. B is rotated from Ch. A |

## 16.5 Package Configuration

TBD

## 16.6 ZQ Wiring

LPDDR5 devices are designed to allow up to NZQ die within a single package to connect to a common ZQ resource. When multiple die share a ZQ resource, one die is designated as the master die. ZQ Calibration Command to Latch Time (tZQCAL4, tZQCAL8 and tZQCAL16) varies depending on the number of die sharing a ZQ resource. (See 4.2.1, ZQ Calibration, for more information.)

Single and dual-channel packages shall support a single ZQ ball which is wired to all die.

Quad-channel packages support 2 ZQ balls where all die from two channels are wired to each ZQ ball. Wiring details are specified in the package ballmap.

Logical mapping – channel, rank and byte (for byte mode) - for all master die is specified in the package ballmap.

# 17. IDD Measurement

IDD values are for the entire operating voltage range, and all of them are for the entire standard range, with the exception of IDD6ET which is for the entire extended temperature range.

The values described below is the specification for 1ch based measurement.

**Table 120 - LPDDR5 IDD Specification Parameters and Operating Conditions**

| Parameter/Condition | Symbol | Power Supply | 6400 (x16) | 6400 (x8) | Units | Notes |
|---|---|---|---|---|---|---|
| **Operating one bank active-Precharge current:**<br>tCK = tCKmin; tRC = tRCmin;<br>CS is LOW between valid commands;<br>CA bus inputs are switching;<br>Data bus inputs are stable<br>RDQS_t is stable (if Link ECC is enabled)<br>ODT disabled<br>WCK inputs are stable | $IDD0_1$ | VDD1 | 3.25 | 6.50 | mA | 9 |
| | $IDD0_2$ | VDD2 | 38.30 | 76.60 | mA | 9 |
| | $IDD0_Q$ | VDDQ | 1.00 | 2.00 | mA | 3 |
| **Idle power-down standby current:**<br>tCK = tCKmin;<br>Power-down entry command is issued<br>CS is LOW;<br>All banks are idle;<br>CA bus inputs are switching;<br>Data bus inputs are stable;<br>RDQS_t is stable (if Link ECC is enabled)<br>ODT disabled<br>WCK inputs are stable | $IDD2P_1$ | VDD1 | 0.75 | 1.50 | mA | |
| | $IDD2P_2$ | VDD2 | 3.50 | 7.00 | mA | |
| | $IDD2P_Q$ | VDDQ | 0.40 | 0.80 | mA | 3 |
| **Idle power-down standby current with clock stop:**<br>CK_t =LOW, CK_c =HIGH;<br>CS is LOW;<br>All banks are idle;<br>CA bus inputs are stable;<br>Data bus inputs are stable<br>RDQS_t is stable (if Link ECC is enabled)<br>ODT disabled<br>WCK inputs are stable | $IDD2PS_1$ | VDD1 | 0.75 | 1.50 | mA | |
| | $IDD2PS_2$ | VDD2 | 3.50 | 7.00 | mA | |
| | $IDD2PS_Q$ | VDDQ | 0.40 | 0.80 | mA | 3 |
| **Idle non power-down standby current:**<br>tCK = tCKmin;<br>CS is LOW;<br>All banks are idle;<br>CA bus inputs are switching;<br>Data bus inputs are stable<br>RDQS_t is stable (if Link ECC is enabled)<br>ODT disabled<br>WCK inputs are stable | $IDD2N_1$ | VDD1 | 0.75 | 1.50 | mA | |
| | $IDD2N_2$ | VDD2 | 20.00 | 40.00 | mA | |
| | $IDD2N_Q$ | VDDQ | 1.00 | 2.00 | mA | 3 |

| Parameter/Condition | Symbol | Power Supply | 6400 (x16) | 6400 (x8) | Units | Notes |
|---|---|---|---|---|---|---|
| **Idle non power-down standby current with clock stopped:**<br>CK_t=LOW; CK_c=HIGH;<br>CS is LOW;<br>All banks are idle;<br>CA bus inputs are stable;<br>Data bus inputs are stable<br>RDQS_t is stable (if Link ECC is enabled)<br>ODT disabled<br>WCK inputs are stable | $IDD2NS_1$ | VDD1 | 0.75 | 1.50 | mA | |
| | $IDD2NS_2$ | VDD2 | 19.30 | 38.60 | mA | |
| | $IDD2NS_Q$ | VDDQ | 1.00 | 2.00 | mA | 3 |
| **Active power-down standby current:**<br>tCK = tCKmin;<br>CS is LOW;<br>One bank is active; Power-down entry command is issued<br>CA bus inputs are switching;<br>Data bus inputs are stable<br>RDQS_t is stable (if Link ECC is enabled)<br>ODT disabled<br>WCK inputs are stable | $IDD3P_1$ | VDD1 | 1.28 | 2.55 | mA | 9 |
| | $IDD3P_2$ | VDD2 | 5.50 | 11.00 | mA | 9 |
| | $IDD3P_Q$ | VDDQ | 0.40 | 0.80 | mA | 3 |
| **Active power-down standby current with clock stop:**<br>Power-down entry command is issued<br>CK_t=LOW, CK_c=HIGH;<br>CS is LOW;<br>One bank is active;<br>CA bus inputs are stable;<br>Data bus inputs are stable<br>RDQS_t is stable (if Link ECC is enabled)<br>ODT disabled<br>WCK inputs are stable and static | $IDD3PS_1$ | VDD1 | 1.28 | 2.55 | mA | 9 |
| | $IDD3PS_2$ | VDD2 | 5.50 | 11.00 | mA | 9 |
| | $IDD3PS_Q$ | VDDQ | 0.40 | 0.80 | mA | 4 |
| **Active non-power-down standby current:**<br>tCK = tCKmin;<br>CS is LOW;<br>One bank is active;<br>CA bus inputs are switching;<br>Data bus inputs are stable<br>RDQS_t is stable (if Link ECC is enabled)<br>ODT disabled<br>WCK inputs are stable and static | $IDD3N_1$ | VDD1 | 1.38 | 2.75 | mA | 9 |
| | $IDD3N_2$ | VDD2 | 27.00 | 54.00 | mA | 9 |
| | $IDD3N_Q$ | VDDQ | 1.00 | 2.00 | mA | 4 |
| **Active non-power-down standby current with clock stopped:**<br>CK_t=LOW, CK_c=HIGH;<br>CS is LOW;<br>One bank is active;<br>CA bus inputs are stable;<br>Data bus inputs are stable<br>RDQS_t is stable (if Link ECC is enabled)<br>ODT disabled<br>WCK inputs are stable and static | $IDD3NS_1$ | VDD1 | 1.38 | 2.75 | mA | 9 |
| | $IDD3NS_2$ | VDD2 | 24.50 | 49.00 | mA | 9 |
| | $IDD3NS_Q$ | VDDQ | 1.00 | 2.00 | mA | 4 |

| Parameter/Condition | Symbol | Power Supply | 6400 (x16) | 6400 (x8) | Units | Notes |
|---|---|---|---|---|---|---|
| **Operating burst WRITE current @ BG Mode**<br>tCK = tCKmin; tWCK=tWCKmin;<br>CS is LOW between valid commands;<br>One bank in each bank group 1 and 2 is active;<br>BL = 16 or 32 ; WL = WLmin;<br>CA bus inputs are switching;<br>50% data change each burst transfer<br>RDQS_t is stable (if Link ECC is enabled)<br>ODT disabled | $IDD4W_1$ | VDD1 | 10.25 | 11.20 | mA | |
| | $IDD4W_2$ | VDD2 | 267.00 | 332.00 | mA | |
| | $IDD4W_Q$ | VDDQ | 1.00 | 2.00 | mA | 4 |
| **Operating burst READ current @ BG Mode**<br>tCK = tCKmin; tWCK=tWCKmin;<br>CS is LOW between valid commands;<br>One bank in each bank group 1 and 2 is active;<br>BL = 16 or 32 ; RL = RLmin;<br>CA bus inputs are switching;<br>50% data change each burst transfer<br>ODT disabled | $IDD4R_1$ | VDD1 | 8.00 | 9.00 | mA | |
| | $IDD4R_2$ | VDD2 | 280.00 | 336.00 | mA | |
| | $IDD4R_Q$ | VDDQ | 77.50 | 78.00 | mA | 8 |
| **All-bank REFRESH Burst current:**<br>tCK = tCKmin;<br>CS is LOW between valid commands;<br>tRC = tRFCabmin;<br>Burst refresh;<br>CA bus inputs are switching;<br>Data bus inputs are stable;<br>RDQS_t is stable (if Link ECC is enabled)<br>ODT disabled<br>WCK inputs are stable and static | $IDD5_1$ | VDD1 | 25.50 | 51.00 | mA | |
| | $IDD5_2$ | VDD2 | 152.00 | 304.00 | mA | |
| | $IDD5_Q$ | VDDQ | 1.00 | 2.00 | mA | 4 |
| **All-bank REFRESH Average current:**<br>tCK = tCKmin;<br>CS is LOW between valid commands;<br>tRC = tREFI;<br>CA bus inputs are switching;<br>Data bus inputs are stable;<br>RDQS_t is stable (if Link ECC is enabled)<br>ODT disabled<br>WCK inputs are stable and static | $IDD5AB_1$ | VDD1 | 2.75 | 5.50 | mA | |
| | $IDD5AB_2$ | VDD2 | 27.50 | 55.00 | mA | |
| | $IDD5AB_Q$ | VDDQ | 1.00 | 2.00 | mA | 4 |
| **Per-bank REFRESH Average current:**<br>tCK = tCKmin;<br>CS is LOW between valid commands;<br>tRC = tREFI/8;<br>CA bus inputs are switching;<br>Data bus inputs are stable;<br>RDQS_t is stable (if Link ECC is enabled)<br>ODT disabled<br>WCK inputs are stable and static | $IDD5PB_1$ | VDD1 | 2.75 | 5.50 | mA | |
| | $IDD5PB_2$ | VDD2 | 28.00 | 56.00 | mA | |
| | $IDD5PB_Q$ | VDDQ | 1.00 | 2.00 | mA | 4 |

| Parameter/Condition | Symbol | Power Supply | 6400 (x16) | 6400 (x8) | Units | Notes |
|---|---|---|---|---|---|---|
| **Power down Self refresh current:**<br>CK_t=LOW, CK_c=HIGH;<br>CS is LOW;<br>CA bus inputs are stable;<br>Data bus inputs are stable;<br>Maximum 1x Self-Refresh Rate; (≤85° C)<br>Maximum TBDx Self-Refresh Rate; (>85° C)<br>RDQS_t is stable (if Link ECC is enabled)<br>ODT disabled<br>WCK inputs are stable and static | $IDD6_1$ | VDD1 | 2.50 | 5.00 | mA | 6,7 |
| | $IDD6_2$ | VDD2 | 14.00 | 28.00 | mA | 6,7 |
| | $IDD6_Q$ | VDDQ | 0.40 | 0.80 | mA | 4,6,7,8 |

Notes

1. Published IDD values are the maximum of the distribution of the arithmetic mean.
2. ODT disabled. MR11 OP[6:4] = $000_B$
3. IDD current specifications are tested after the device is properly initialized.
4. Measured currents are the summation of VDDQ and VDD2H / VDD2L.
5. Guaranteed by design with output load = 5pF and RON = 40 ohm.
6. The 1x Self-Refresh Rate is the rate at which the LPDDR5 device is refreshed internally during Self-Refresh, before going into the elevated Tem perature range.
7. This is the general definition that applies to full array Self Refresh.
8. When MR13 OP[7] is high, single VDD2 rail, VDD2L Current shall be added to VDD2H Current.
9. IDD values can be different according to the bank organization set by MR3 OP[4:3].
10. When DVFSC is enabled, the minimum tCK shall be set by following DVFSC operating frequency.